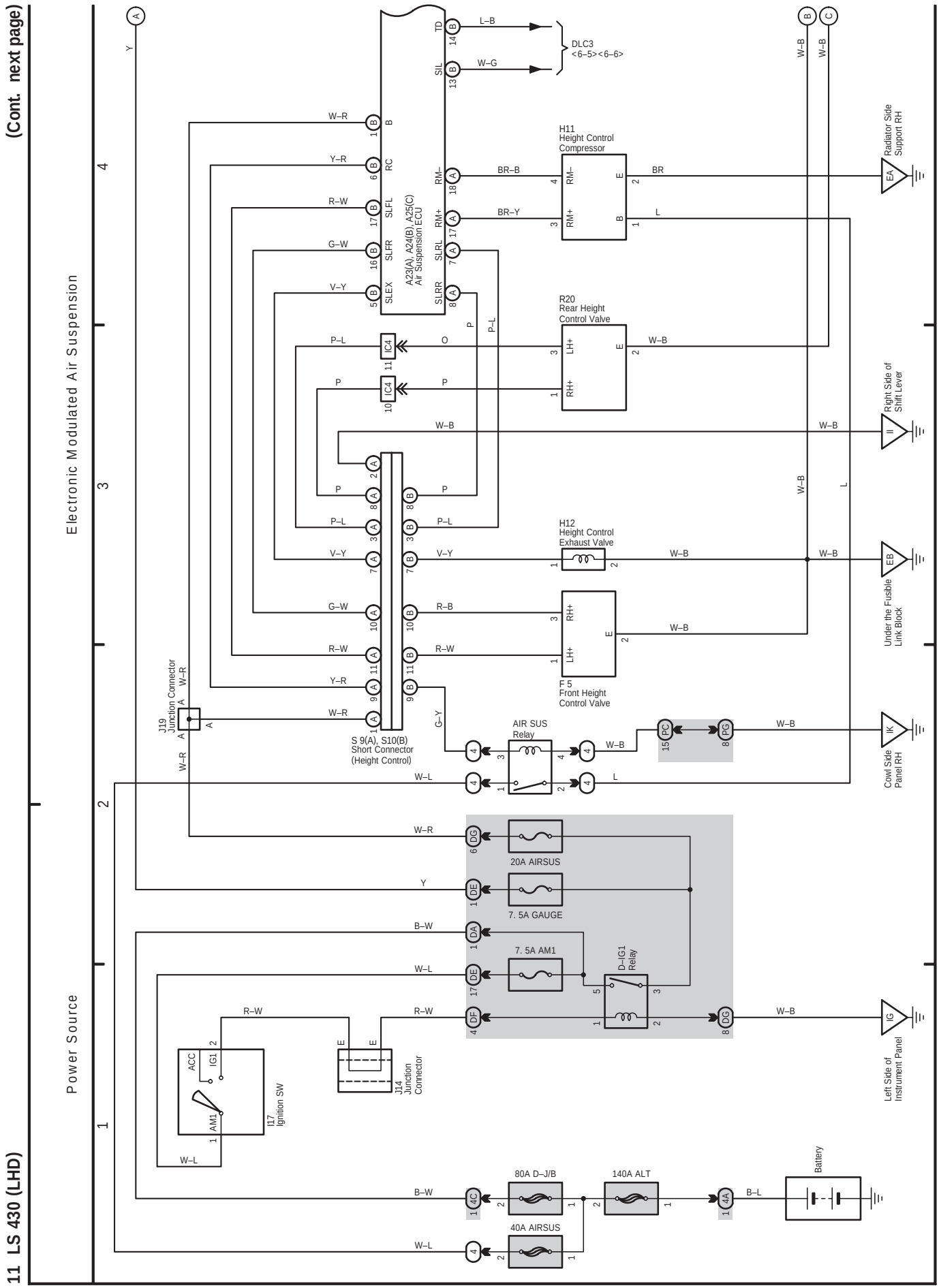
(Cont. next page)
Electronic Modulated Air Suspension
Power Source
A23(A), A24(B), A25(C)
Air Suspension ECU
DLC3
<6–5><6–6>
H11
Height Control
Compressor
R20
Rear Height
Control Valve
H12
Height Control
Exhaust Valve
F 5
Front Height
Control Valve
S 9(A), S10(B)
Short Connector
(Height Control)
J19
Junction Connector
AIR SUS
Relay
20A AIRSUS
7. 5A GAUGE
7. 5A AM1
D–IG1
Relay
I17
Ignition SW
J14
Junction
Connector
80A D–J/B
140A ALT
40A AIRSUS
Battery
Radiator Side
Support RH
Right Side of
Shift Lever
Under the Fusible
Link Block
Cowl Side
Panel RH
Left Side of
Instrument Panel
11 LS 430 (LHD)
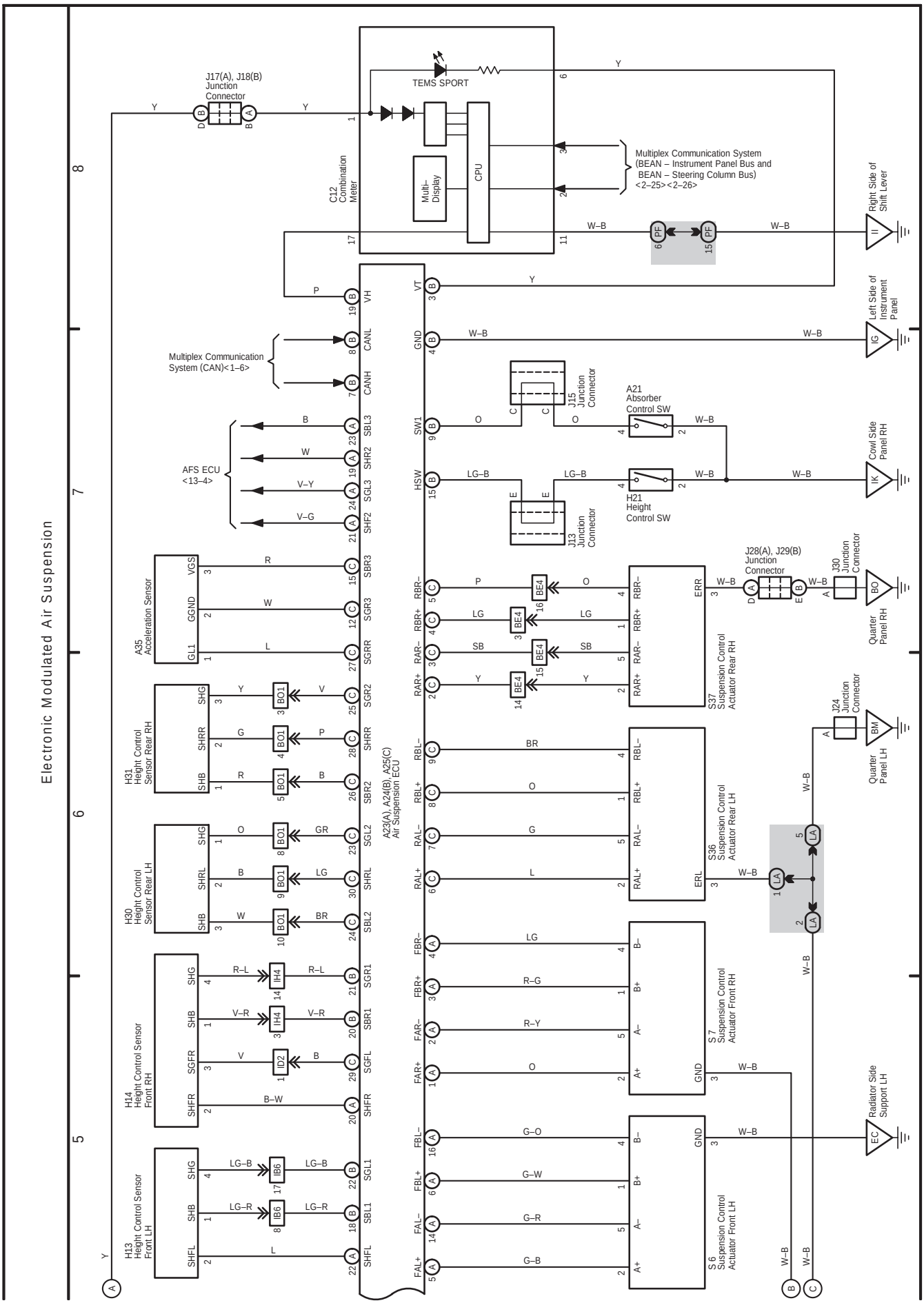
11 LS 430 (LHD) (Cont' d)