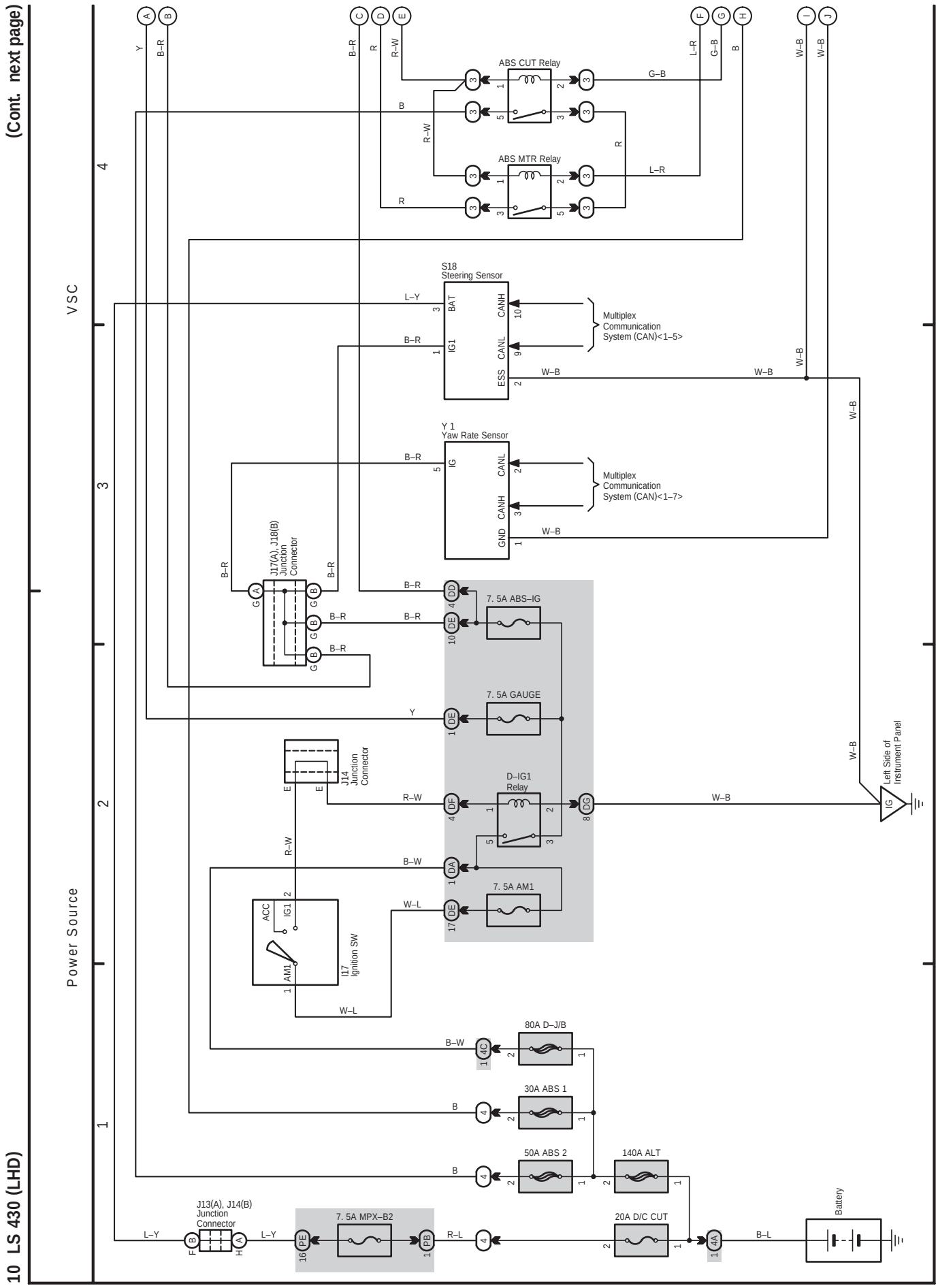
(Cont. next page)
10 LS 430 (LHD)
VSC
Power Source
ABS CUT Relay
ABS MTR Relay
S18
Steering Sensor
Multiplex
Communication
System (CAN)<1–5>
Y 1
Yaw Rate Sensor
Multiplex
Communication
System (CAN)<1–7>
J17(A), J18(B)
Junction
Connector
7. 5A ABS–IG
7. 5A GAUGE
J14
Junction
Connector
D–IG1
Relay
7. 5A AM1
I17
Ignition SW
80A D–J/B
30A ABS 1
50A ABS 2
140A ALT
J13(A), J14(B)
Junction
Connector
7. 5A MPX–B2
20A D/C CUT
Battery
Left Side of
Instrument Panel

(Cont. next page)

10 LS 430 (LHD) (Cont' d)

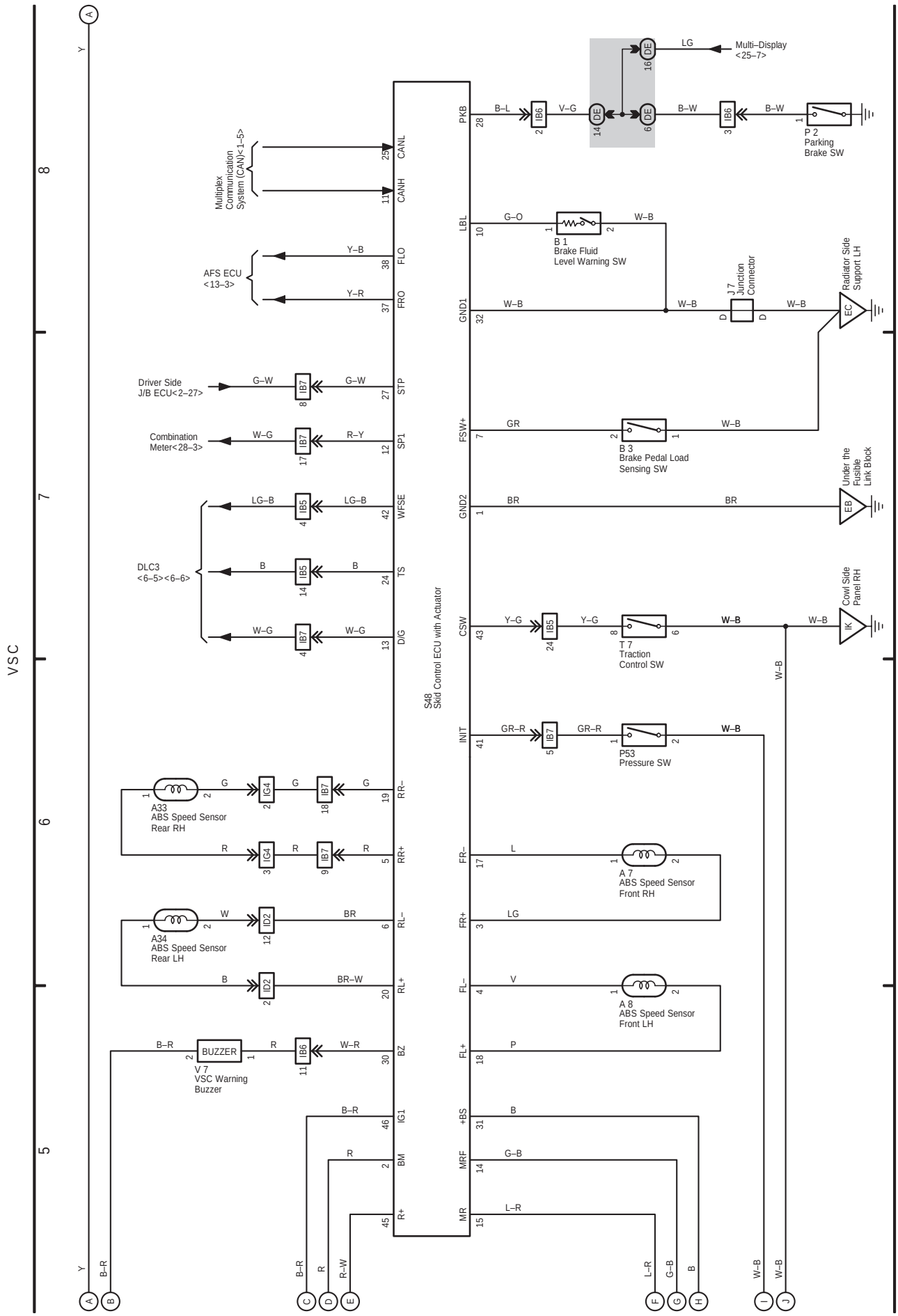

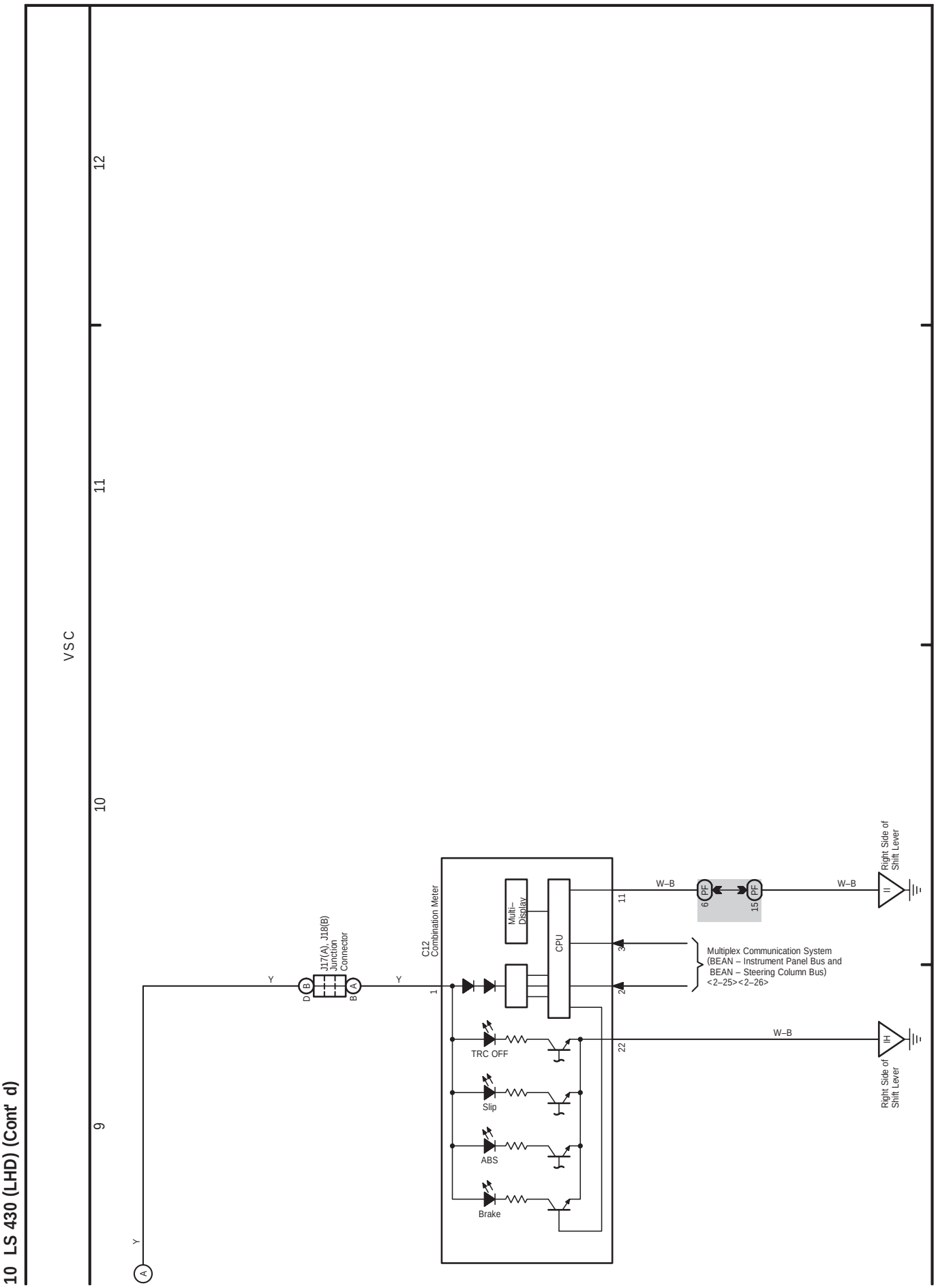
10 LS 430 (LHD) (Cont' d)
VSC
12
11
10
9
Y
A
Y
D B
J17(A), J18(B)
Junction
Connector
B A
Y
C12
Combination Meter
1
Multi–
Display
CPU
TRC OFF
Slip
ABS
Brake
11
3
2
22
W–B
6 PF
15 PF
W–B
Multiplex Communication System
(BEAN – Instrument Panel Bus and
BEAN – Steering Column Bus)
<2–25><2–26>
W–B
II
IH
Right Side of
Shift Lever
Right Side of
Shift Lever