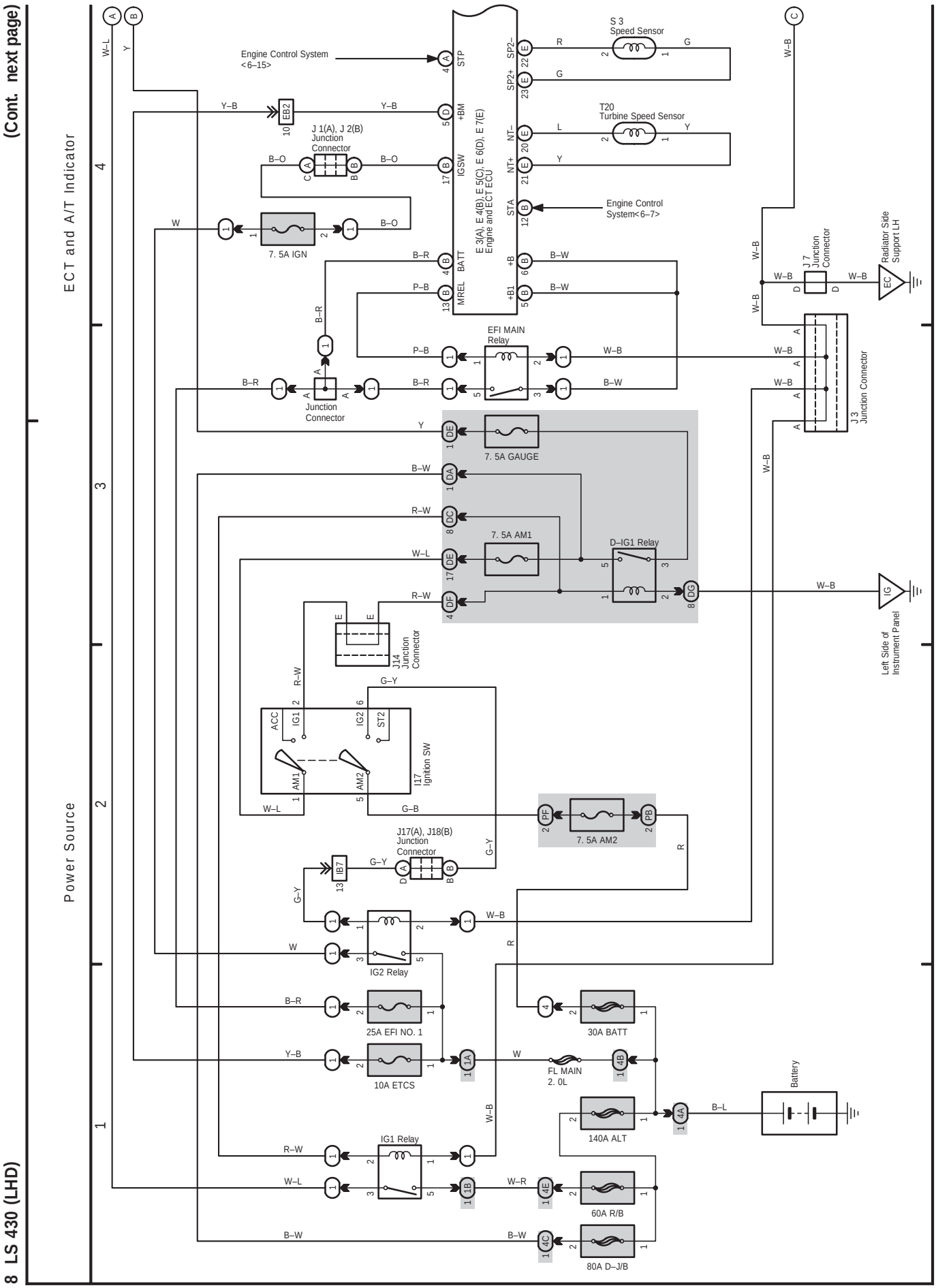
(Cont. next page)
ECT and A/T Indicator
Power Source
Engine Control System
<6–15>
E 3(A), E 4(B), E 5(C), E 6(D), E 7(E)
Engine and ECT ECU
STP
+BM
IGSW
BATT
MREL
STA
+B
+B1
SP2–
SP2+
NT–
NT+
S 3
Speed Sensor
T20
Turbine Speed Sensor
Engine Control
System<6–7>
J 1(A), J 2(B)
Junction
Connector
7. 5A IGN
EFI MAIN
Relay
Junction
Connector
7. 5A GAUGE
7. 5A AM1
D–IG1 Relay
J14
Junction
Connector
I17
Ignition SW
ACC
IG1
IG2
ST2
AM1
AM2
7. 5A AM2
J17(A), J18(B)
Junction
Connector
IG2 Relay
25A EFI NO. 1
10A ETCS
IG1 Relay
30A BATT
FL MAIN
2. 0L
140A ALT
60A R/B
80A D–J/B
Battery
J 7
Junction
Connector
Radiator Side
Support LH
J 3
Junction Connector
Left Side of
Instrument Panel
8 LS 430 (LHD)

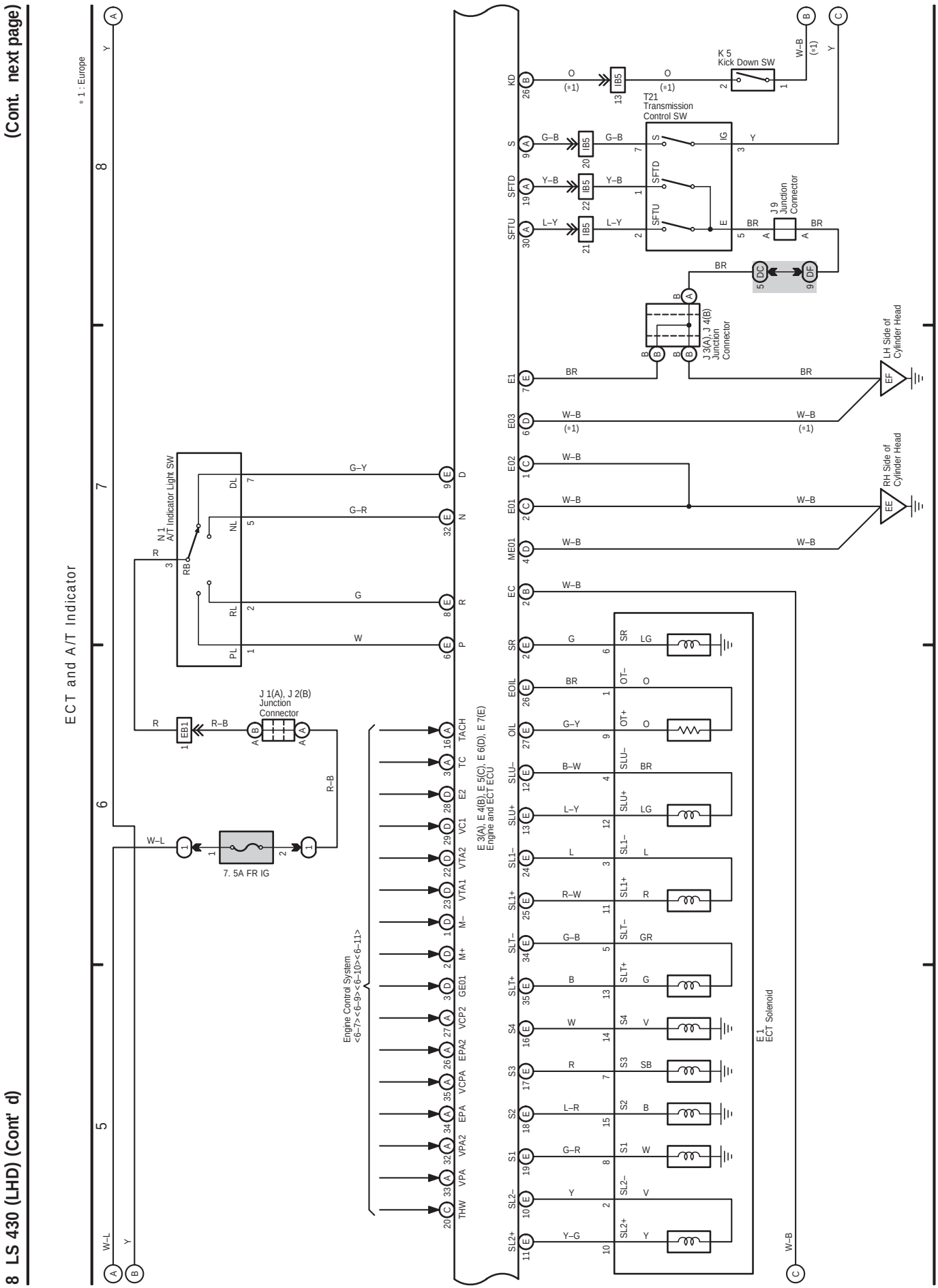
8 LS 430 (LHD) (Cont' d)
(Cont. next page)
ECT and A/T Indicator
* 1 : Europe
N 1
A/T Indicator Light SW
J 1(A), J 2(B)
Junction
Connector
7. 5A FR IG
Engine Control System
<6–7><6–9><6–10><6–11>
E 3(A), E 4(B), E 5(C), E 6(D), E 7(E)
Engine and ECT ECU
E 1
ECT Solenoid
K 5
Kick Down SW
T21
Transmission
Control SW
J 9
Junction
Connector
J 3(A), J 4(B)
Junction
Connector
LH Side of
Cylinder Head
RH Side of
Cylinder Head
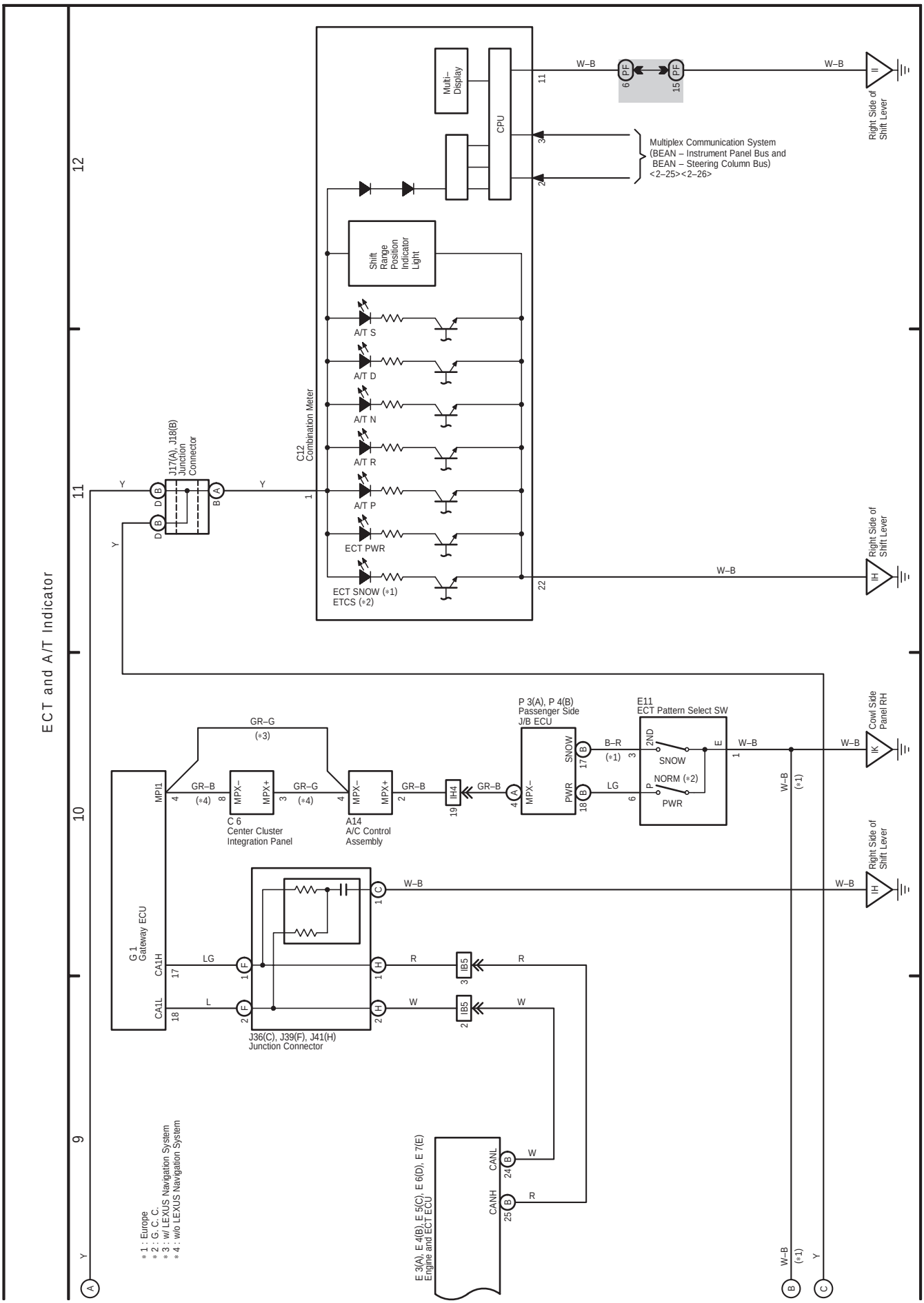
8 LS 430 (LHD) (Cont' d)