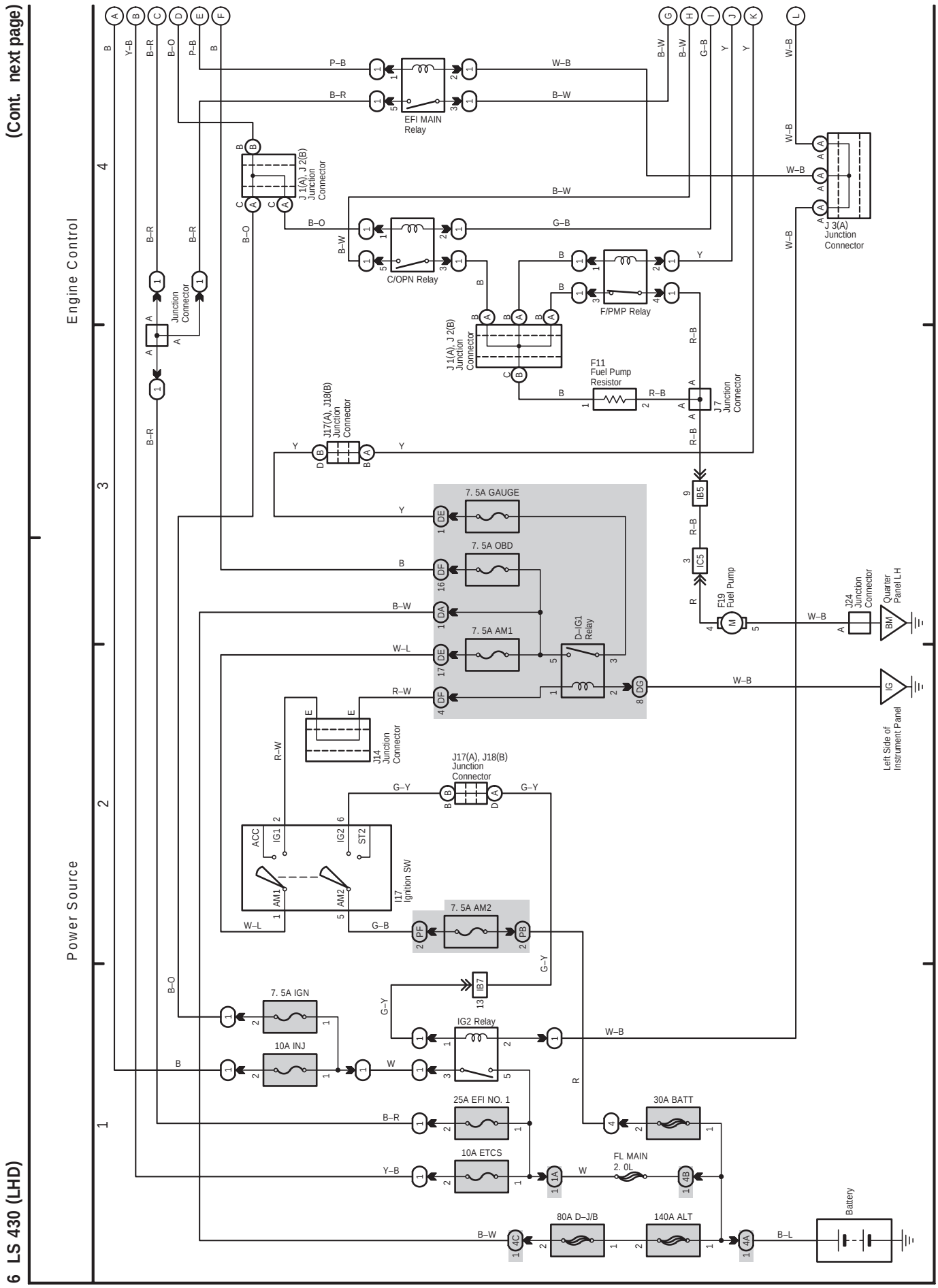
(Cont. next page)
Engine Control
Power Source
EFI MAIN Relay
C/OPN Relay
F/PMP Relay
J 1(A), J 2(B) Junction Connector
J 3(A) Junction Connector
Junction Connector
F11 Fuel Pump Resistor
J7 Junction Connector
J17(A), J18(B) Junction Connector
7. 5A GAUGE
7. 5A OBD
7. 5A AM1
D–IG1 Relay
F19 Fuel Pump
J24 Junction Connector
Quarter Panel LH
Left Side of Instrument Panel
J14 Junction Connector
I17 Ignition SW
7. 5A AM2
7. 5A IGN
10A INJ
IG2 Relay
25A EFI NO. 1
30A BATT
10A ETCS
FL MAIN 2. 0L
80A D–J/B
140A ALT
Battery
6 LS 430 (LHD)

6 LS 430 (LHD) (Cont' d)

(Cont. next page)

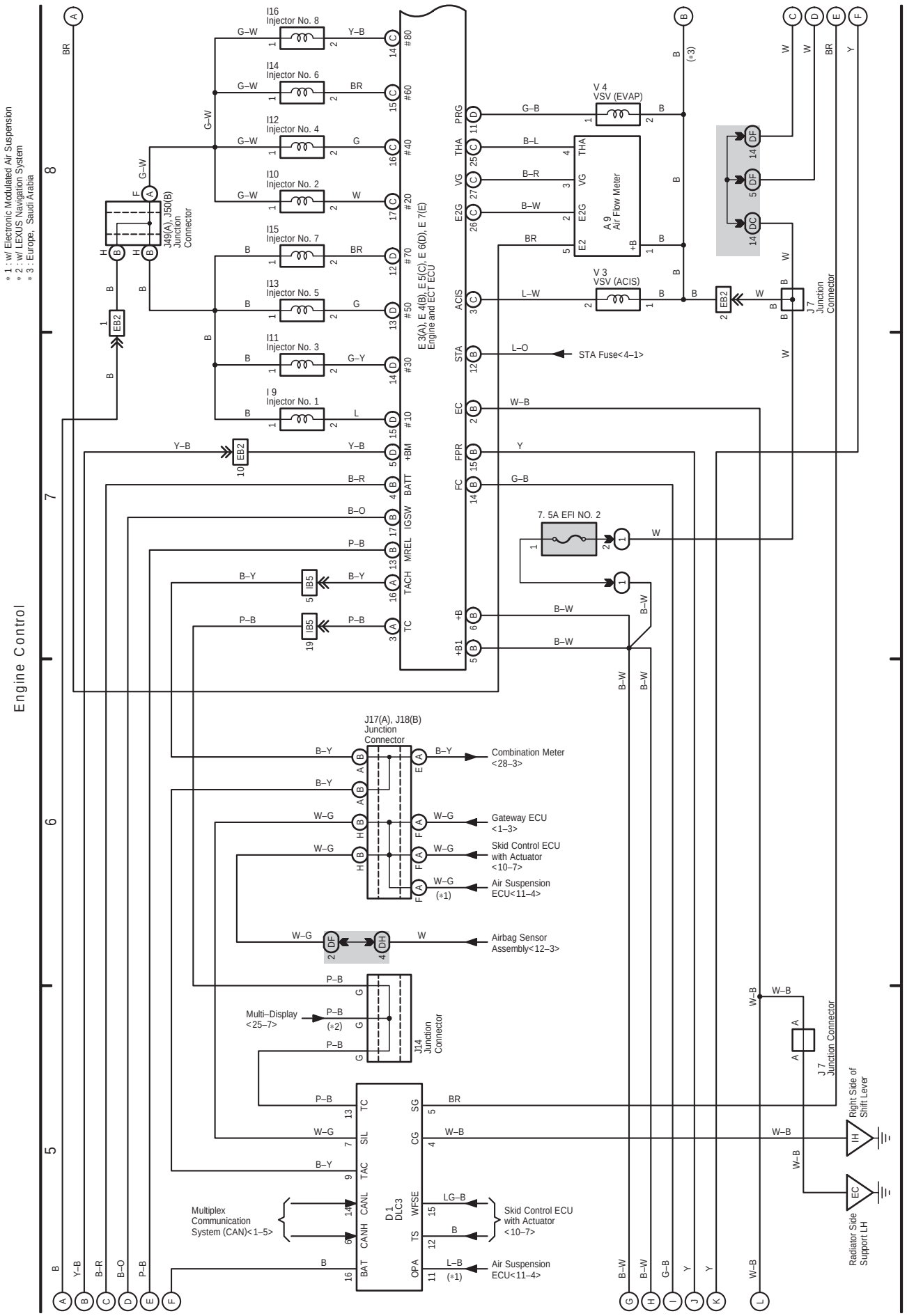

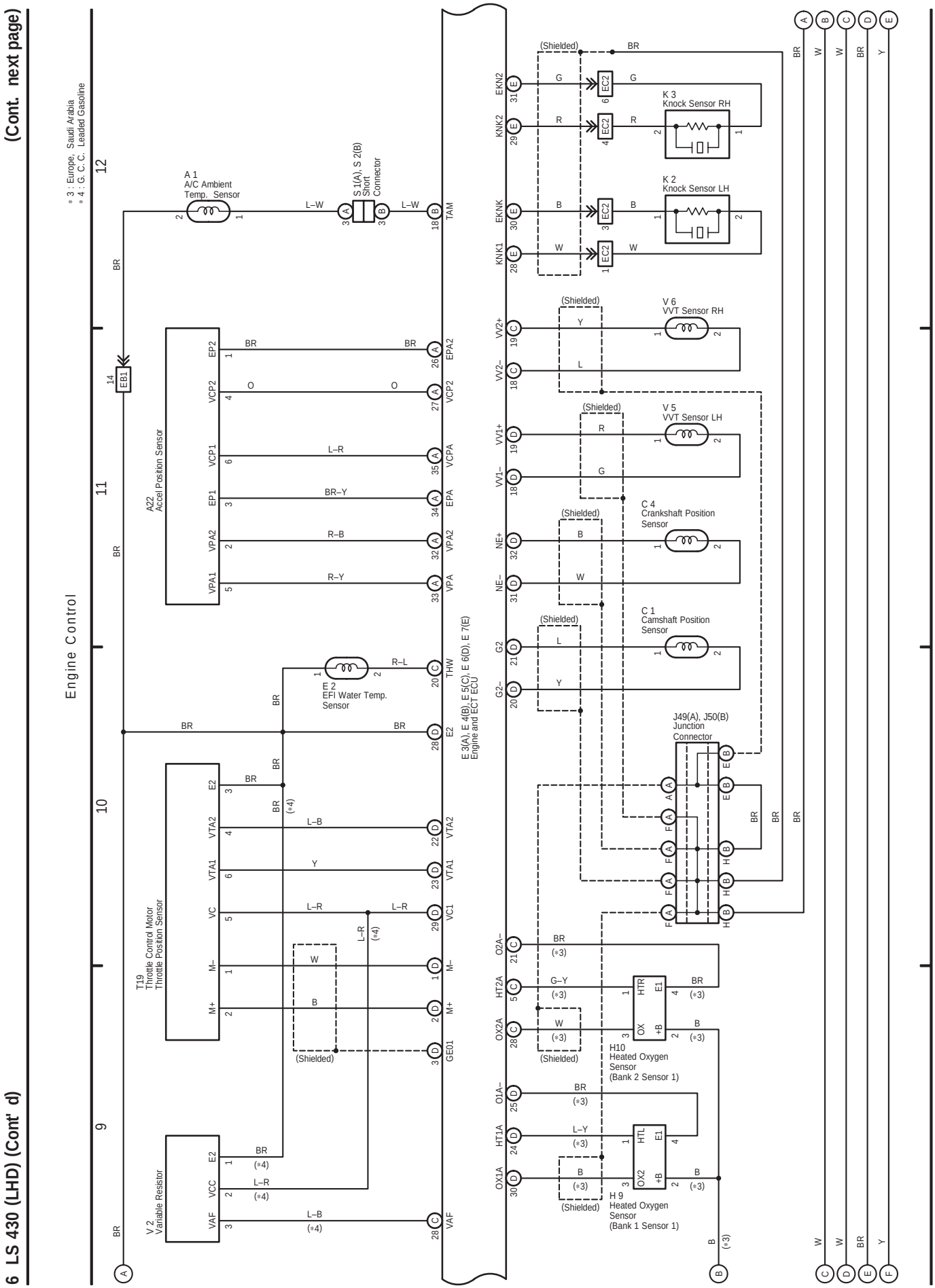
6 LS 430 (LHD) (Cont' d)
(Cont. next page)
Engine Control
* 3 : Europe, Saudi Arabia
* 4 : G. C. C. Leaded Gasoline
A 1
A/C Ambient
Temp. Sensor
S 1(A), S 2(B)
Short
Connector
A22
Accel Position Sensor
T19
Throttle Control Motor
Throttle Position Sensor
V 2
Variable Resistor
E 2
EFI Water Temp.
Sensor
E 3(A), E 4(B), E 5(C), E 6(D), E 7(E)
Engine and ECT ECU
K 3
Knock Sensor RH
K 2
Knock Sensor LH
V 6
VVT Sensor RH
V 5
VVT Sensor LH
C 4
Crankshaft Position
Sensor
C 1
Camshaft Position
Sensor
J49(A), J50(B)
Junction
Connector
H10
Heated Oxygen
Sensor
(Bank 2 Sensor 1)
H 9
Heated Oxygen
Sensor
(Bank 1 Sensor 1)
(Shielded)

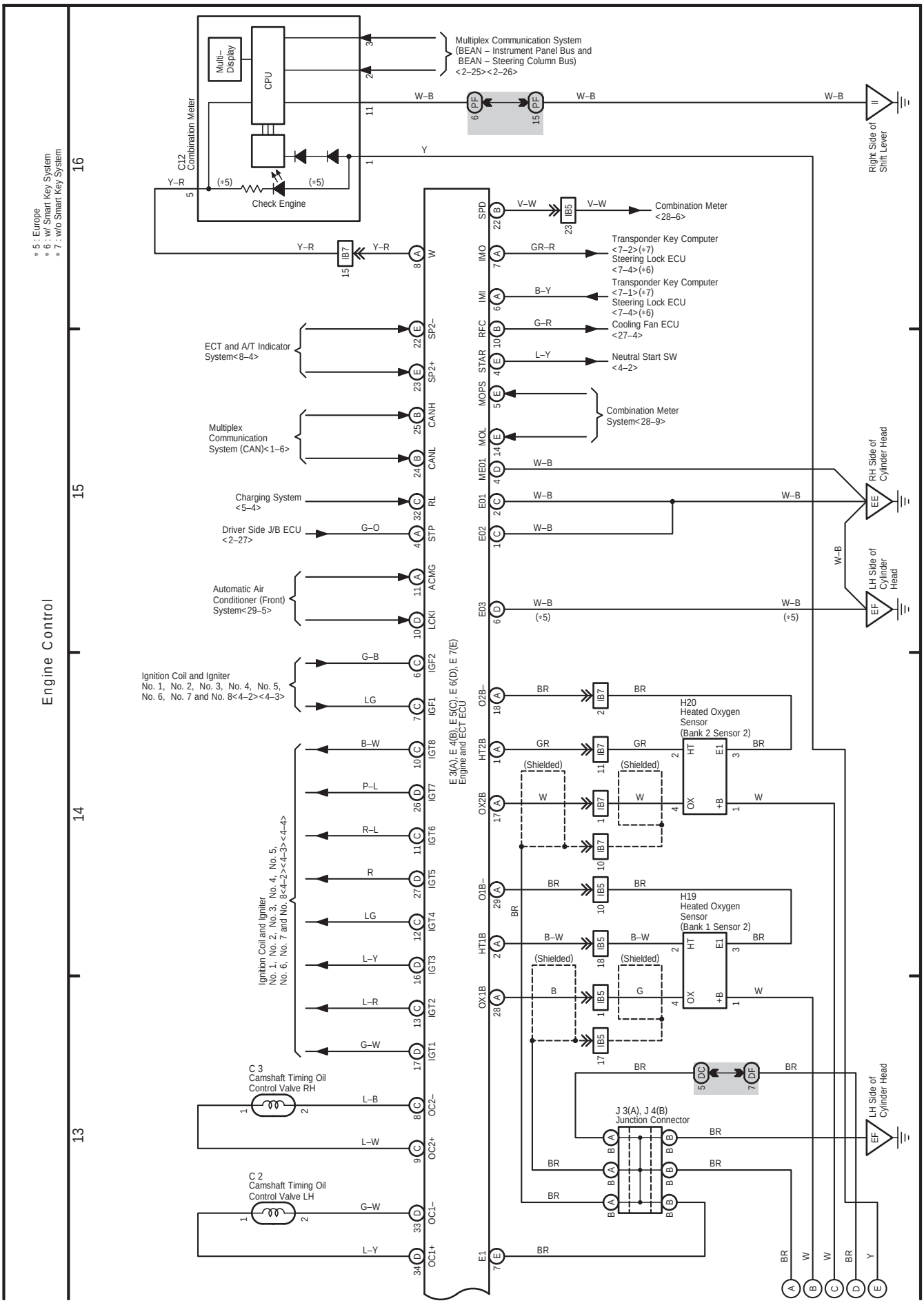
Engine Control
6 LS 430 (LHD) (Cont' d)
* 5 : Europe
* 6 : w/ Smart Key System
* 7 : w/o Smart Key System
C12 Combination Meter
Multi-Display
CPU
Check Engine
Multiplex Communication System (BEAN – Instrument Panel Bus and BEAN – Steering Column Bus) <2–25><2–26>
Right Side of Shift Lever
Combination Meter <28–6>
Transponder Key Computer <7–2>(*7) Steering Lock ECU <7–4>(*6)
Transponder Key Computer <7–1>(*7) Steering Lock ECU <7–4>(*6)
Cooling Fan ECU <27–4>
Neutral Start SW <4–2>
Combination Meter System<28–9>
ECT and A/T Indicator System<8–4>
Multiplex Communication System (CAN)<1–6>
Charging System <5–4>
Driver Side J/B ECU <2–27>
Automatic Air Conditioner (Front) System<29–5>
Ignition Coil and Igniter No. 1, No. 2, No. 3, No. 4, No. 5, No. 6, No. 7 and No. 8<4–2><4–3>
Ignition Coil and Igniter No. 1, No. 2, No. 3, No. 4, No. 5, No. 6, No. 7 and No. 8<4–2><4–3><4–4>
E 3(A), E 4(B), E 5(C), E 6(D), E 7(E) Engine and ECT ECU
RH Side of Cylinder Head
LH Side of Cylinder Head
H20 Heated Oxygen Sensor (Bank 2 Sensor 2)
H19 Heated Oxygen Sensor (Bank 1 Sensor 2)
C 3 Camshaft Timing Oil Control Valve RH
C 2 Camshaft Timing Oil Control Valve LH
J 3(A), J 4(B) Junction Connector