18 LS 430 (RHD)

(Cont. next page)

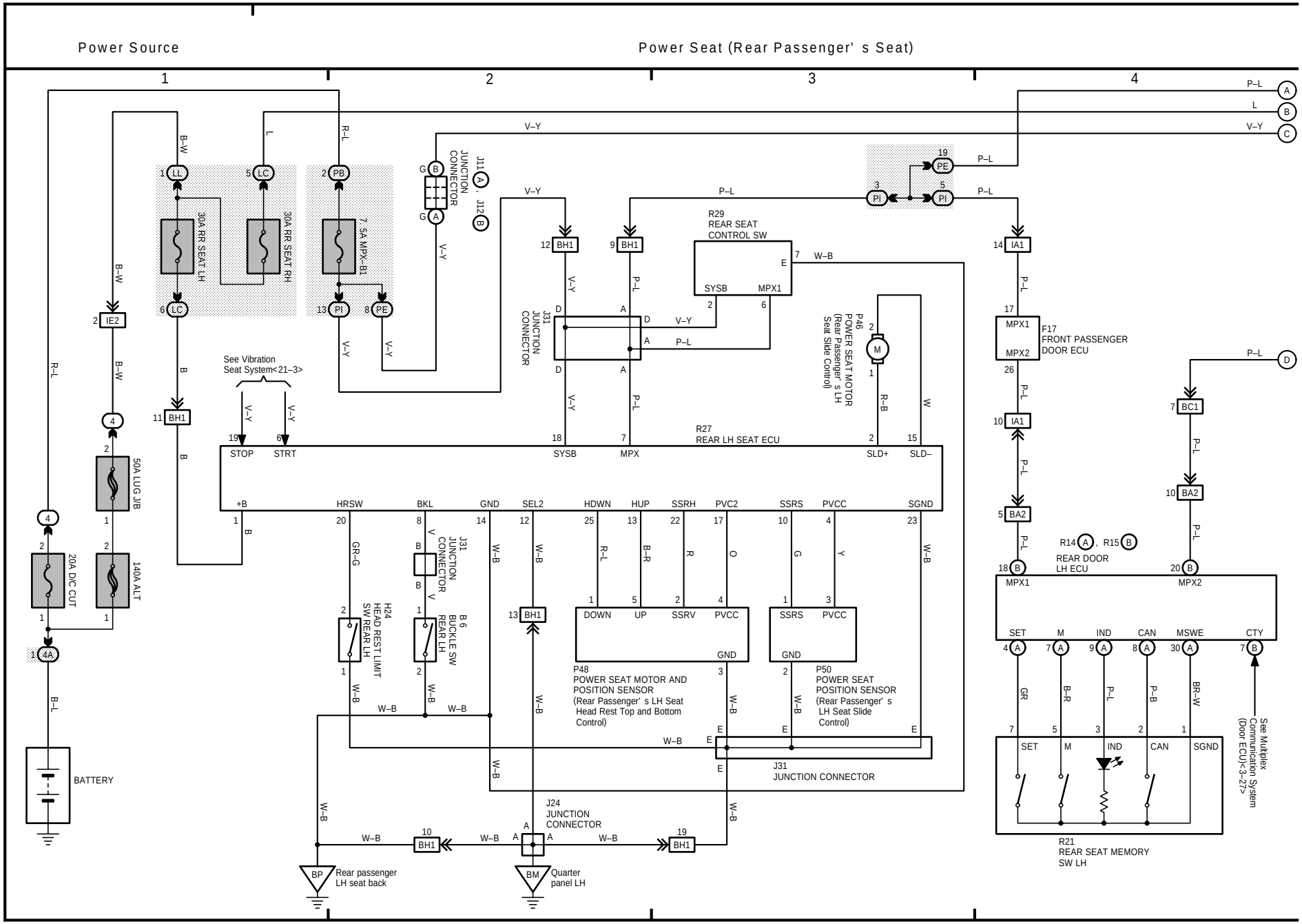

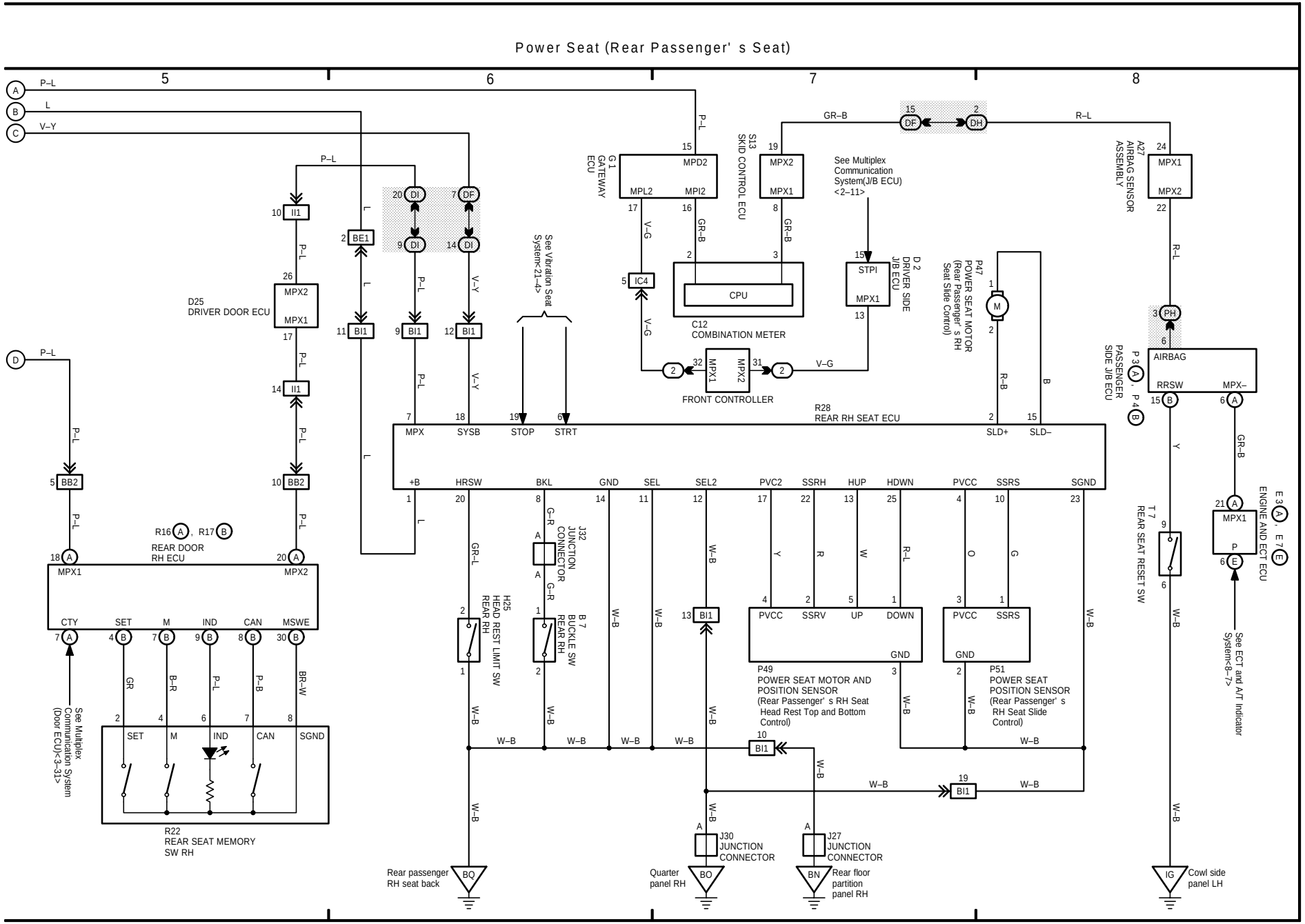
Power Seat (Rear Passenger' s Seat)
5
6
7
8
D25
DRIVER DOOR ECU
MPX2
MPX1
R16 A , R17 B
REAR DOOR
RH ECU
CTY
SET
M
IND
CAN
MSWE
SGND
See Multiplex
Communication System
(Door ECU)<3–31>
R22
REAR SEAT MEMORY
SW RH
G1
GATEWAY
ECU
MPD2
MPL2
MPI2
S13
SKID CONTROL ECU
MPX2
MPX1
See Multiplex
Communication
System(J/B ECU)
<2–11>
C12
COMBINATION METER
CPU
D 2
DRIVER SIDE
J/B ECU
STPI
FRONT CONTROLLER
See Vibration Seat
System<21–4>
R28
REAR RH SEAT ECU
MPX
SYSB
STOP
STRT
SLD+
SLD–
+B
HRSW
BKL
GND
SEL
SEL2
PVC2
SSRH
HUP
HDWN
PVCC
SSRS
SGND
H25
HEAD REST LIMIT SW
REAR RH
J32
JUNCTION
CONNECTOR
B 7
BUCKLE SW
REAR RH
P49
POWER SEAT MOTOR AND
POSITION SENSOR
(Rear Passenger' s RH Seat
Head Rest Top and Bottom
Control)
PVCC
SSRV
UP
DOWN
GND
P51
POWER SEAT
POSITION SENSOR
(Rear Passenger' s
RH Seat Slide
Control)
PVCC
SSRS
GND
P47
POWER SEAT MOTOR
(Rear Passenger' s RH
Seat Slide Control)
A27
AIRBAG SENSOR
ASSEMBLY
MPX1
MPX2
AIRBAG
RRSW
MPX–
P 3 A , P 4 B
PASSENGER
SIDE J/B ECU
T 7
REAR SEAT RESET SW
E 3 A , E 7 m
ENGINE AND ECT ECU
See ECT and A/T Indicator
System<8–7>
J30
JUNCTION
CONNECTOR
J27
JUNCTION
CONNECTOR
Rear passenger
RH seat back
BQ
Quarter
panel RH
BO
BN
Rear floor
partition
panel RH
IG
Cowl side
panel LH