11 LS 430 (RHD)

(Cont. next page)

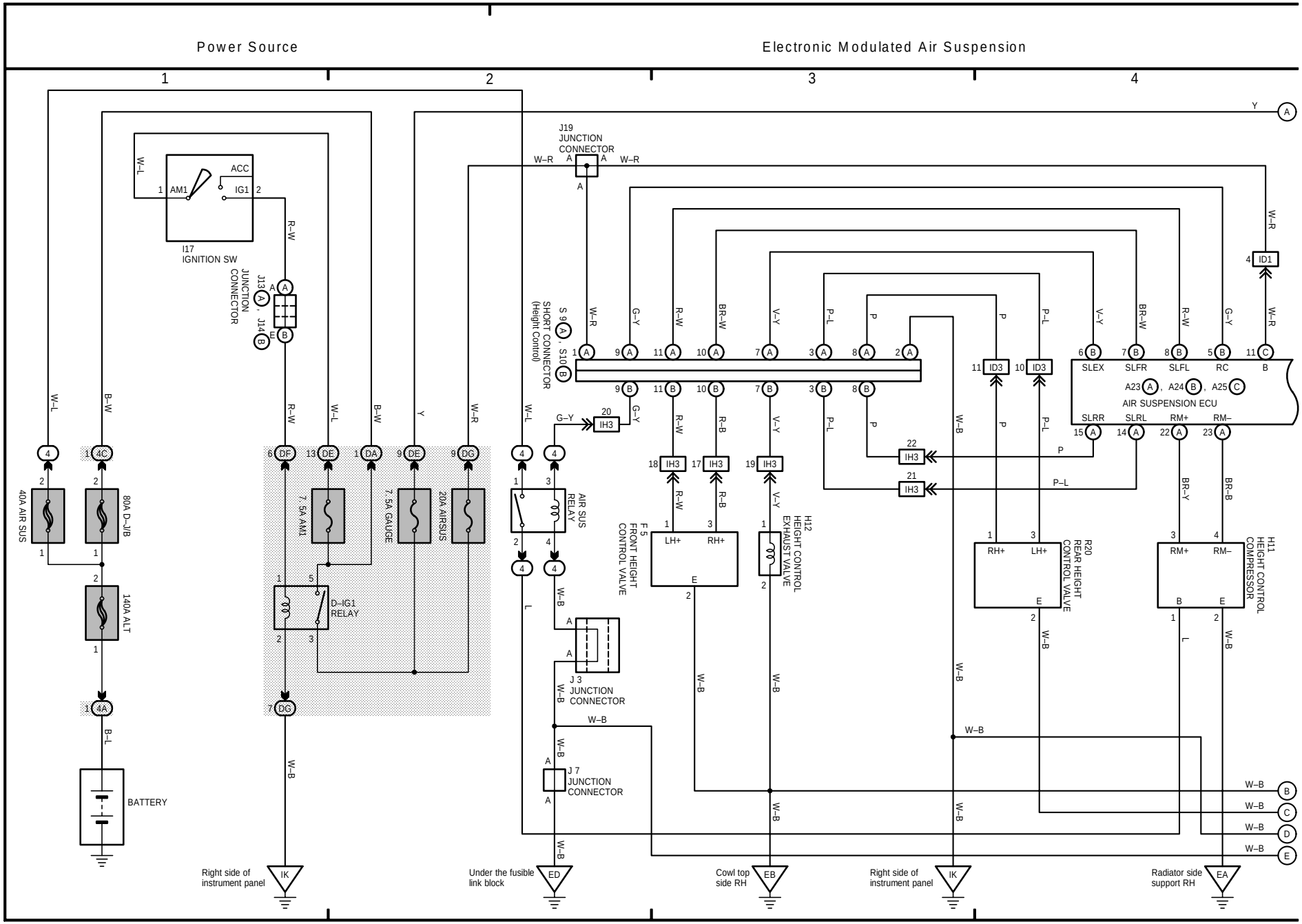

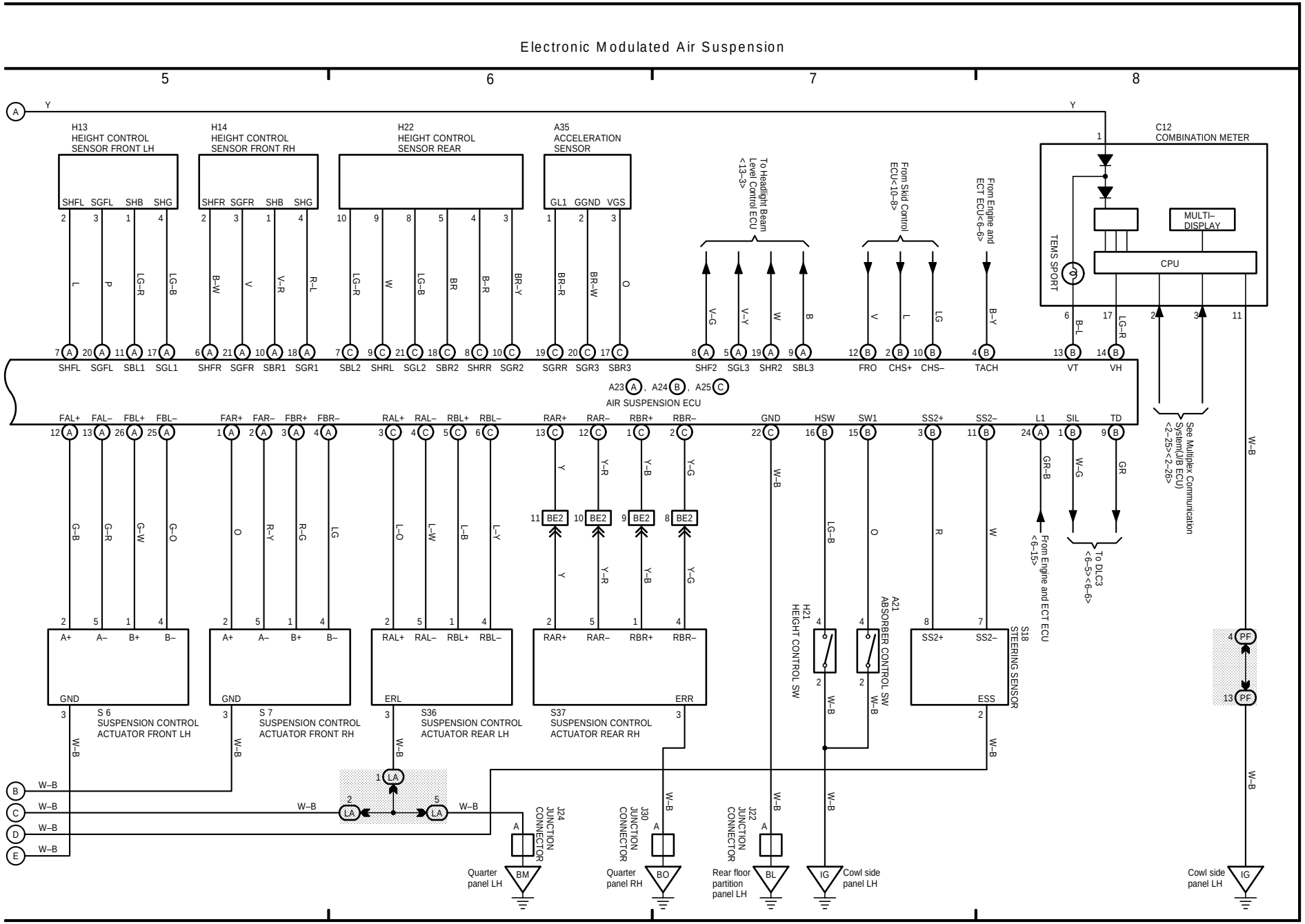
Electronic Modulated Air Suspension
5
6
7
8
H13
HEIGHT CONTROL
SENSOR FRONT LH
H14
HEIGHT CONTROL
SENSOR FRONT RH
H22
HEIGHT CONTROL
SENSOR REAR
A35
ACCELERATION
SENSOR
C12
COMBINATION METER
MULTI–
DISPLAY
CPU
TEMS SPORT
To Headlight Beam
Level Control ECU
<13–3>
From Skid Control
ECU<10–8>
From Engine and
ECT ECU<6–6>
A23 A, A24 B, A25 C
AIR SUSPENSION ECU
See Multiplex Communication
System(JB ECU)
<2–25><2–26>
From Engine and ECT ECU
<6–15>
To DLC3
<6–5><6–6>
H21
HEIGHT CONTROL SW
A21
ABSORBER CONTROL SW
S18
STEERING SENSOR
S 6
SUSPENSION CONTROL
ACTUATOR FRONT LH
S 7
SUSPENSION CONTROL
ACTUATOR FRONT RH
S36
SUSPENSION CONTROL
ACTUATOR REAR LH
S37
SUSPENSION CONTROL
ACTUATOR REAR RH
J24
JUNCTION
CONNECTOR
J30
JUNCTION
CONNECTOR
J22
JUNCTION
CONNECTOR
Quarter
panel LH
Quarter
panel RH
Rear floor
partition
panel LH
Cowl side
panel LH
Cowl side
panel LH