(Cont. next page)

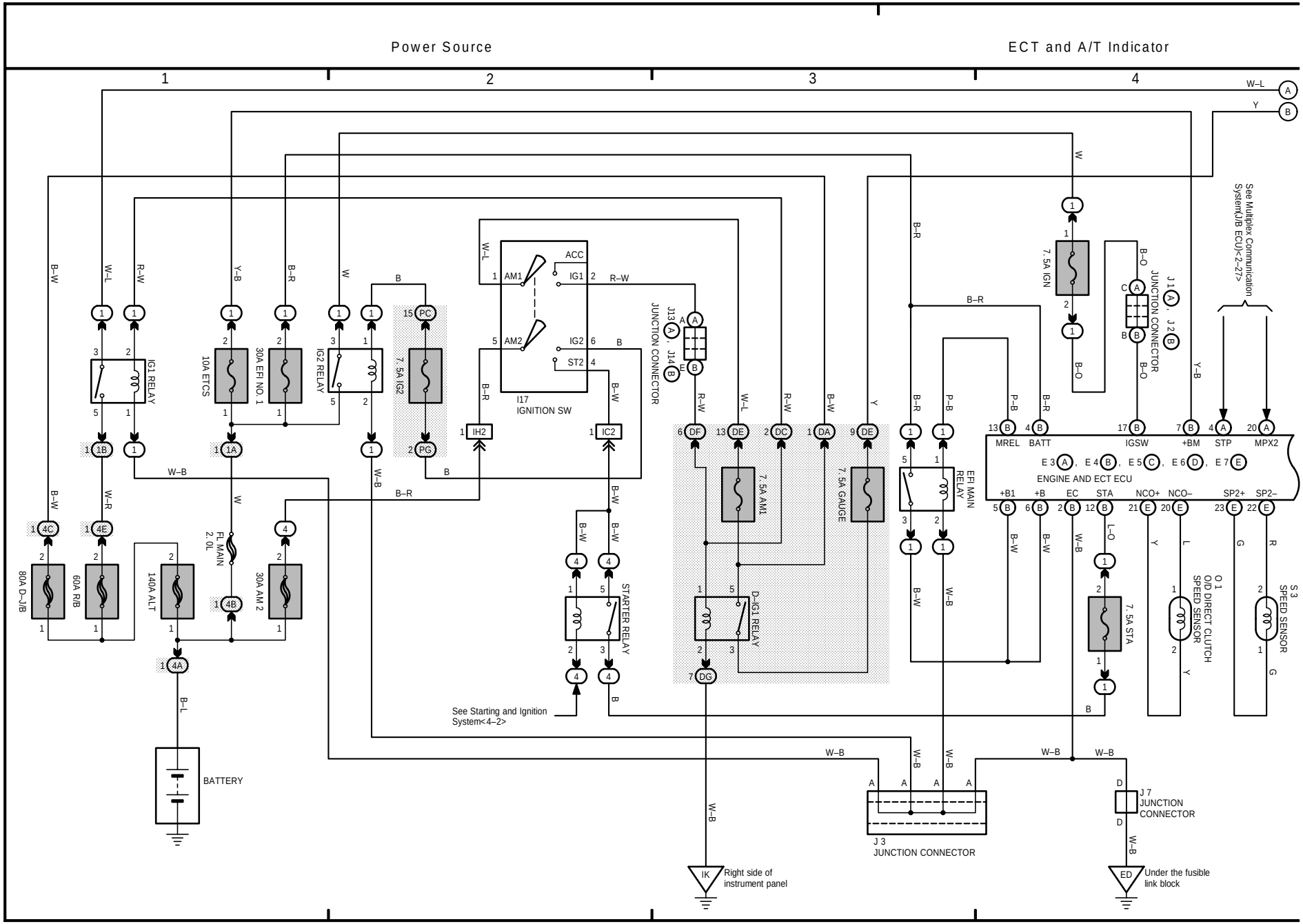

8 LS 430 (RHD) (Cont' d)

(Cont. next page)

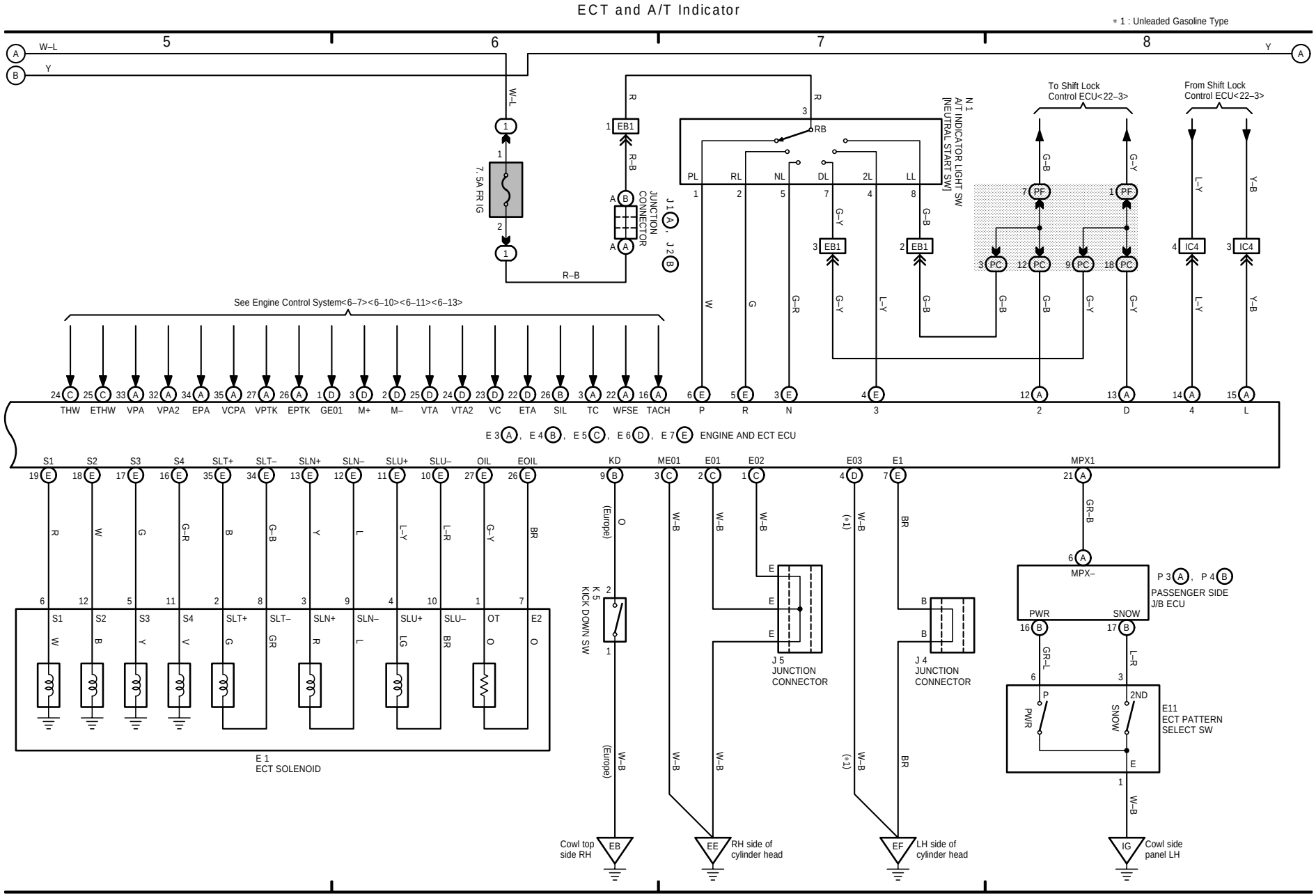

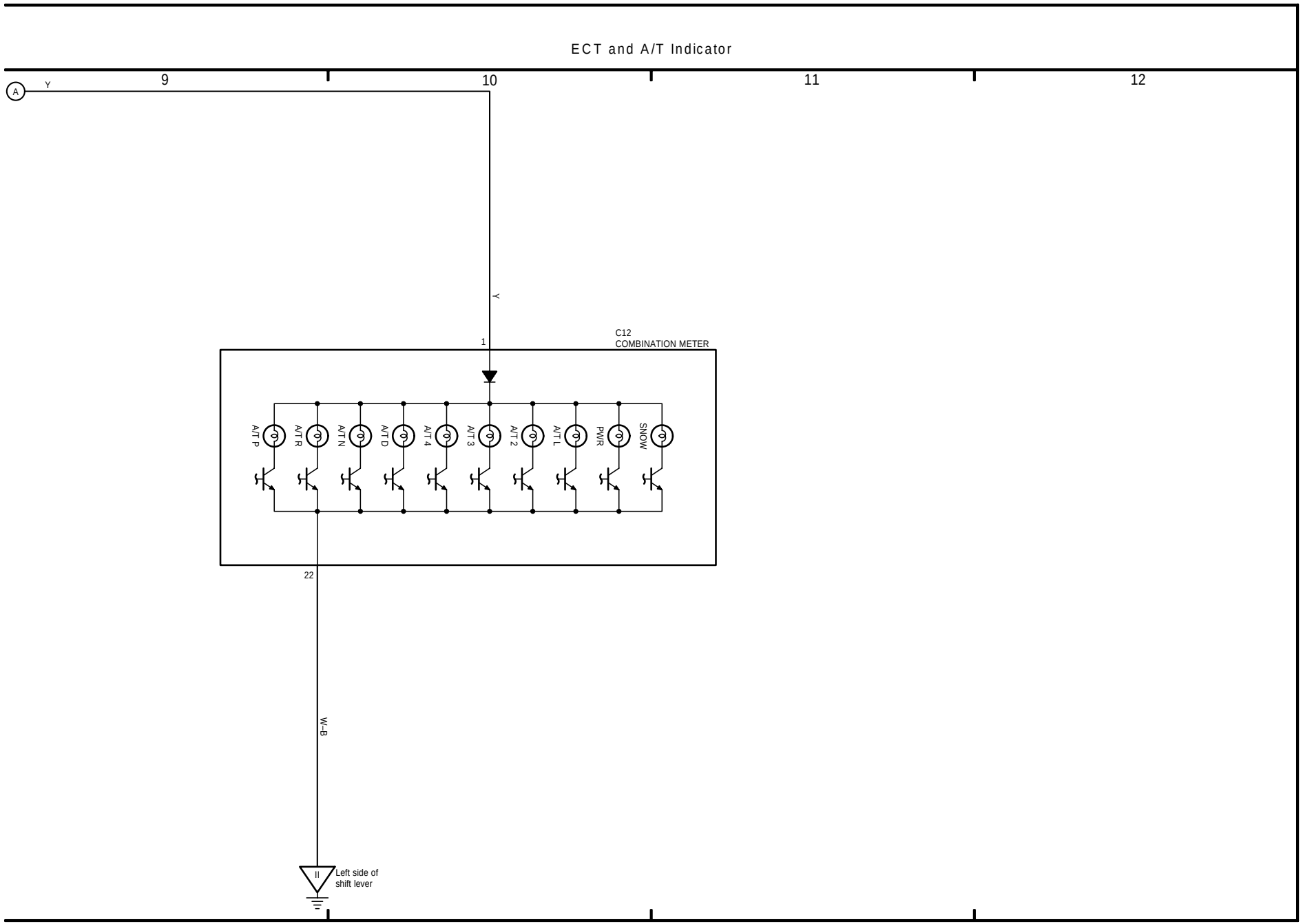
ECT and A/T Indicator
9
10
11
12
A
Y
Y
1
C12
COMBINATION METER
A/T P
A/T R
A/T N
A/T D
A/T 4
A/T 3
A/T 2
A/T L
PWR
SNOW
22
W–B
Left side of
shift lever