6 LS 430 (RHD)

(Cont. next page)

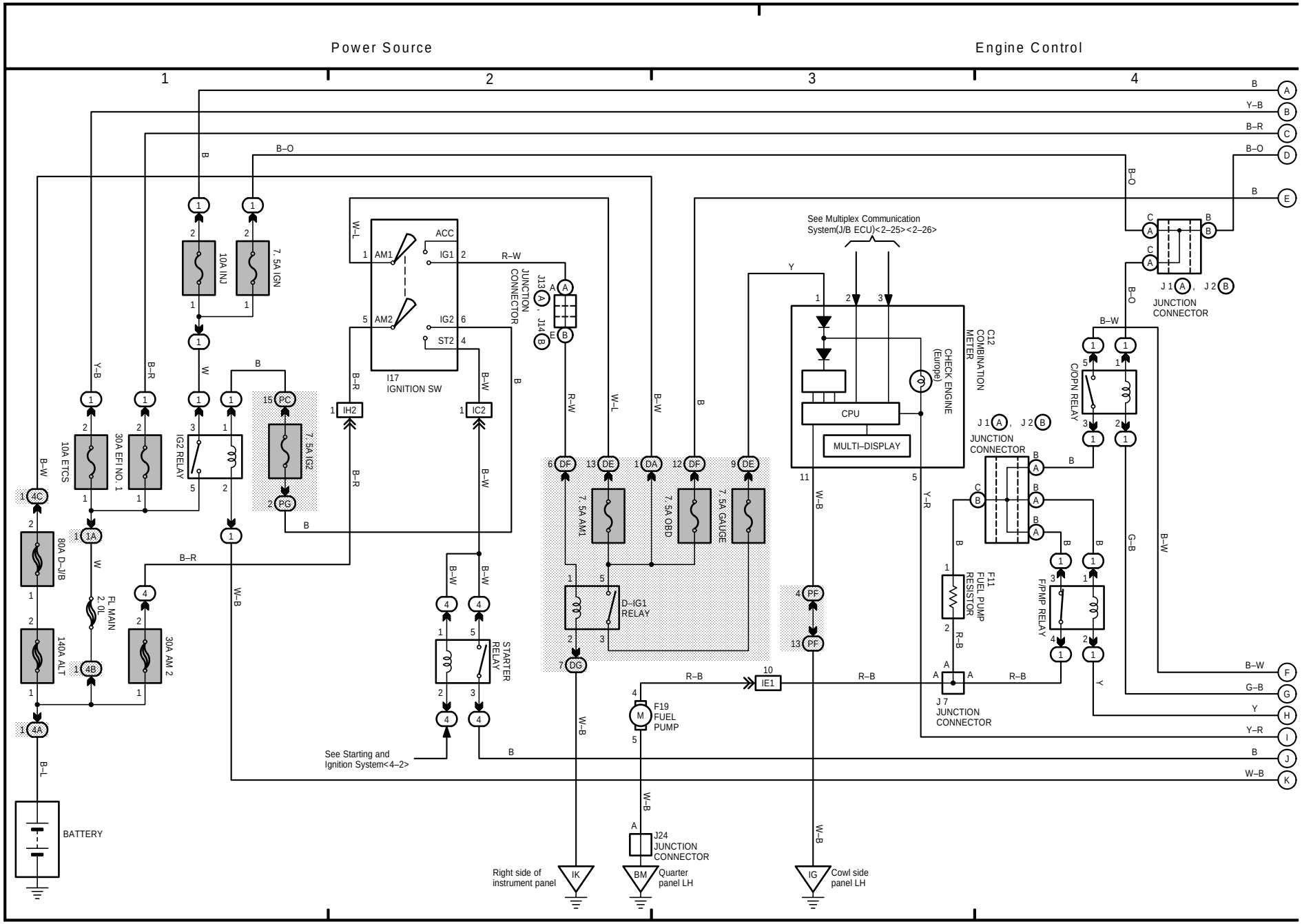

(Cont. next page)

Engine Control

* 1 : w/ Electronic Modulated Air Suspension
* 2 : w/ LEXUS Navigation System
* 3 : Unleaded Gasoline Type

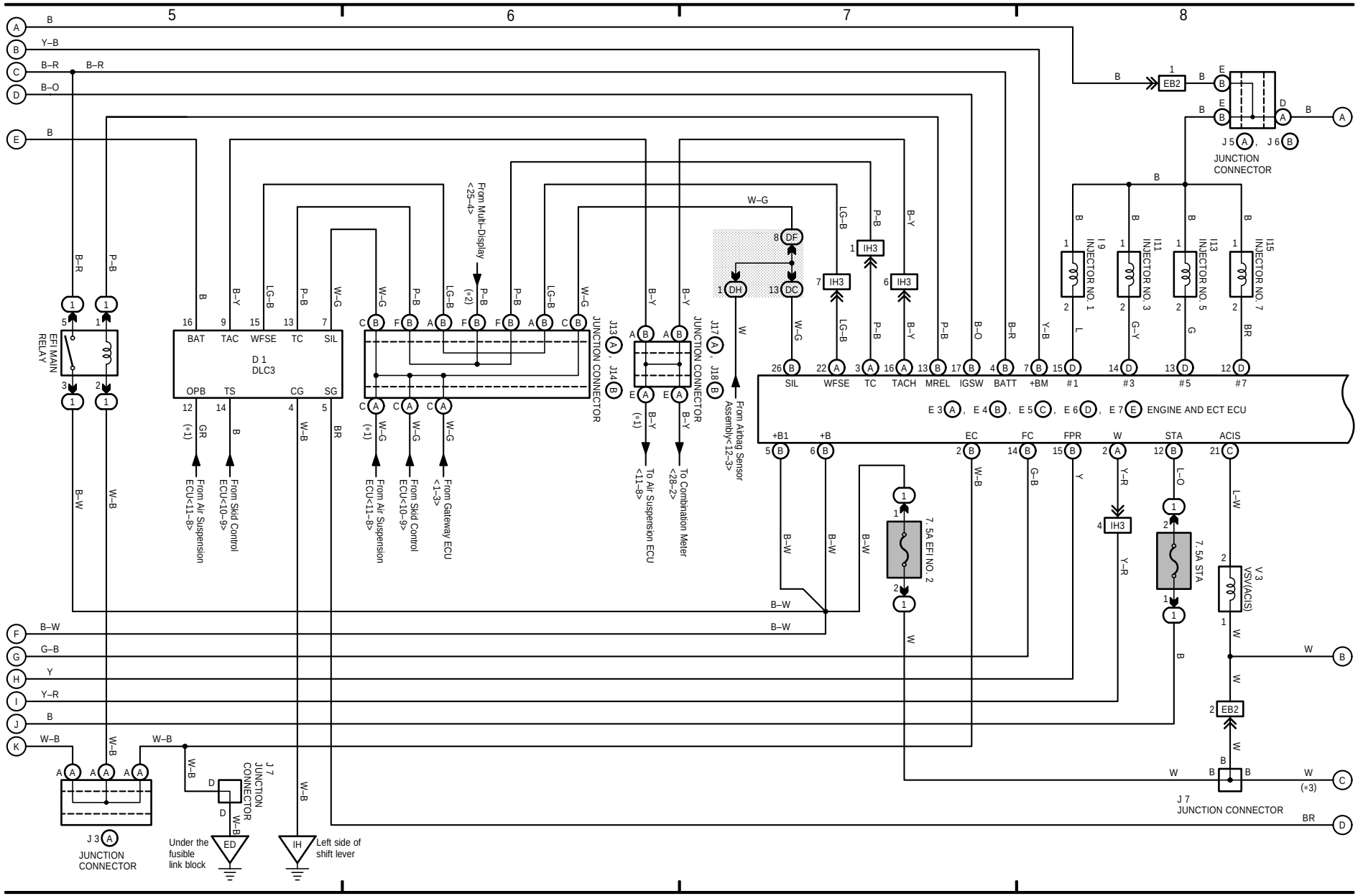

6 LS 430 (RHD) (Cont' d)

(Cont. next page)

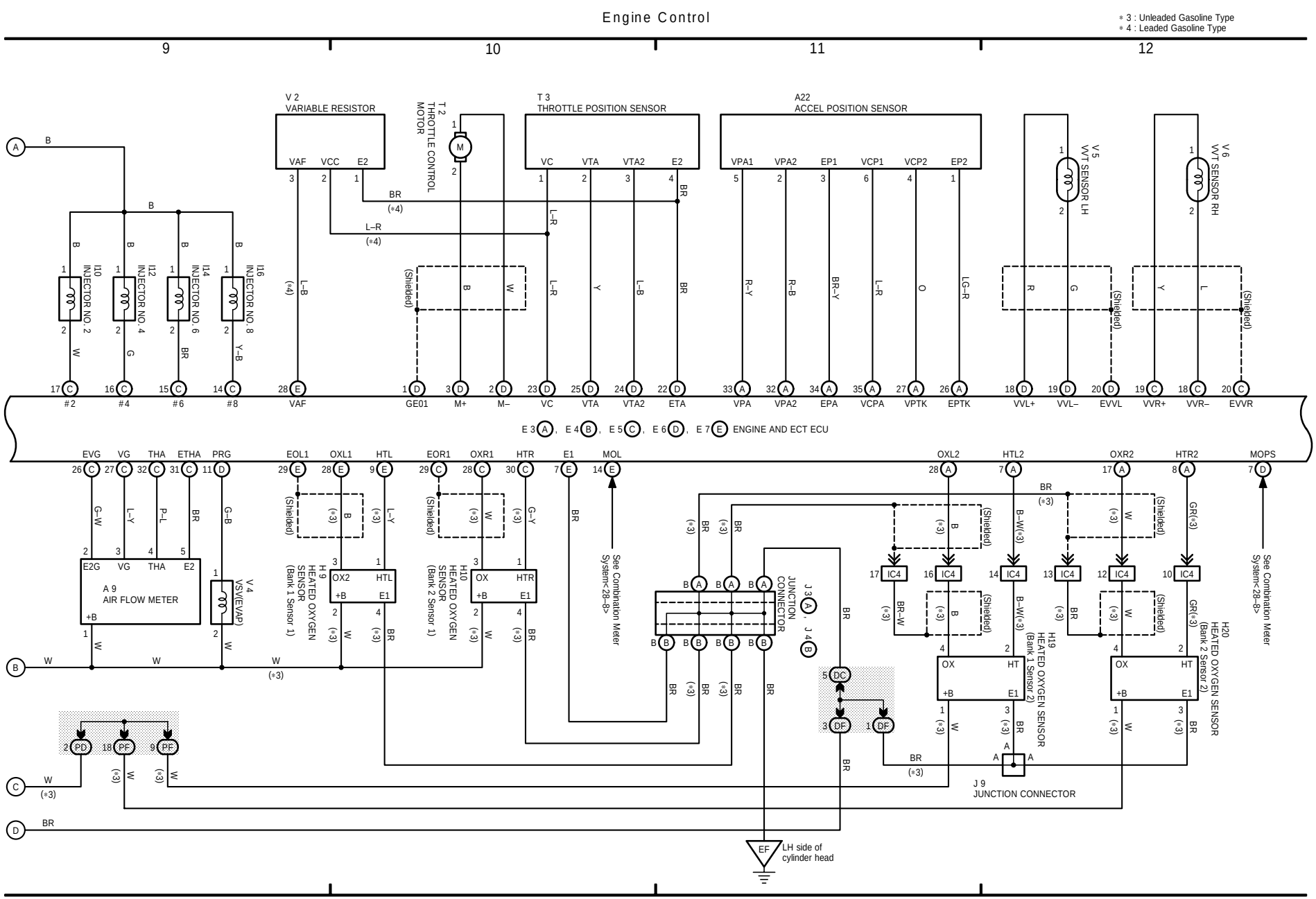

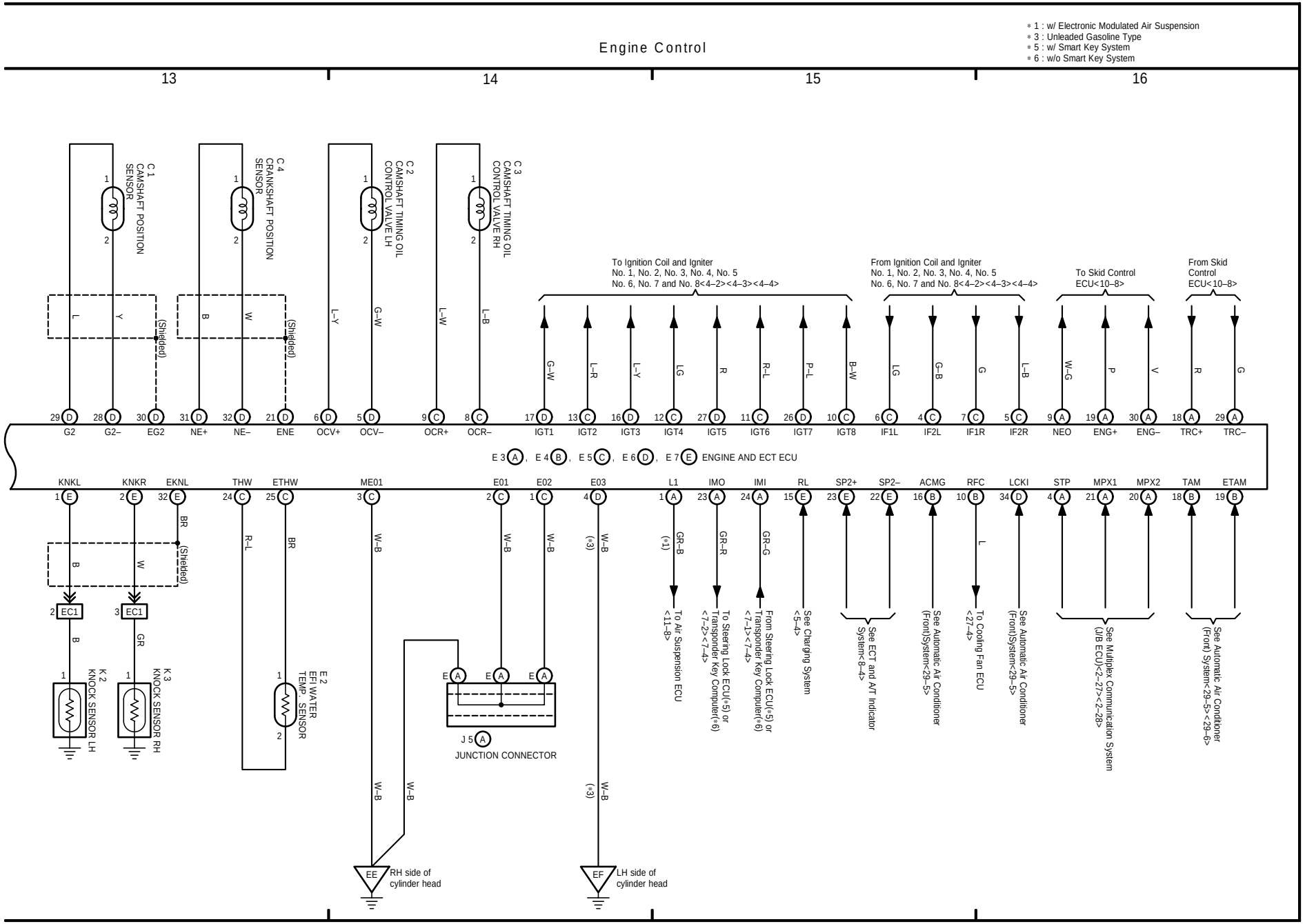
Engine Control
* 1 : w/ Electronic Modulated Air Suspension
* 3 : Unleaded Gasoline Type
* 5 : w/ Smart Key System
* 6 : w/o Smart Key System
13
14
15
16
C 1 CAMSHAFT POSITION SENSOR
C 4 CRANKSHAFT POSITION SENSOR
C 2 CAMSHAFT TIMING OIL CONTROL VALVE LH
C 3 CAMSHAFT TIMING OIL CONTROL VALVE RH
To Ignition Coil and Igniter No. 1, No. 2, No. 3, No. 4, No. 5 No. 6, No. 7 and No. 8<4–2><4–3><4–4>
From Ignition Coil and Igniter No. 1, No. 2, No. 3, No. 4, No. 5 No. 6, No. 7 and No. 8<4–2><4–3><4–4>
To Skid Control ECU<10–8>
From Skid Control ECU<10–8>
(Shielded)
G2 G2– EG2 NE+ NE– ENE OCV+ OCV– OCR+ OCR– IGT1 IGT2 IGT3 IGT4 IGT5 IGT6 IGT7 IGT8 IF1L IF2L IF1R IF2R NEO ENG+ ENG– TRC+ TRC–
E 3 (A), E 4 (B), E 5 (C), E 6 (D), E 7 (E) ENGINE AND ECT ECU
KNKL KNKR EKNL THW ETHW ME01 E01 E02 E03 L1 IMO IMI RL SP2+ SP2– ACMG RFC LCKI STP MPX1 MPX2 TAM ETAM
EC1
K 2 KNOCK SENSOR LH
K 3 KNOCK SENSOR RH
E 2 EFI WATER TEMP. SENSOR
J 5 (A) JUNCTION CONNECTOR
To Air Suspension ECU <11–8>
To Steering Lock ECU(*5) or Transponder Key Computer(*6)
From Steering Lock ECU(*5) or Transponder Key Computer(*6)
See Charging System <5–4>
See ECT and A/T Indicator System<8–4>
See Automatic Air Conditioner (Front)System<29–5>
To Cooling Fan ECU <27–4>
See Automatic Air Conditioner (Front)System<29–5>
See Multiplex Communication System (J/B ECU)<2–27><2–28>
See Automatic Air Conditioner (Front) System<29–5><29–6>
EE RH side of cylinder head
EF LH side of cylinder head