N OVERALL ELECTRICAL WIRING DIAGRAM
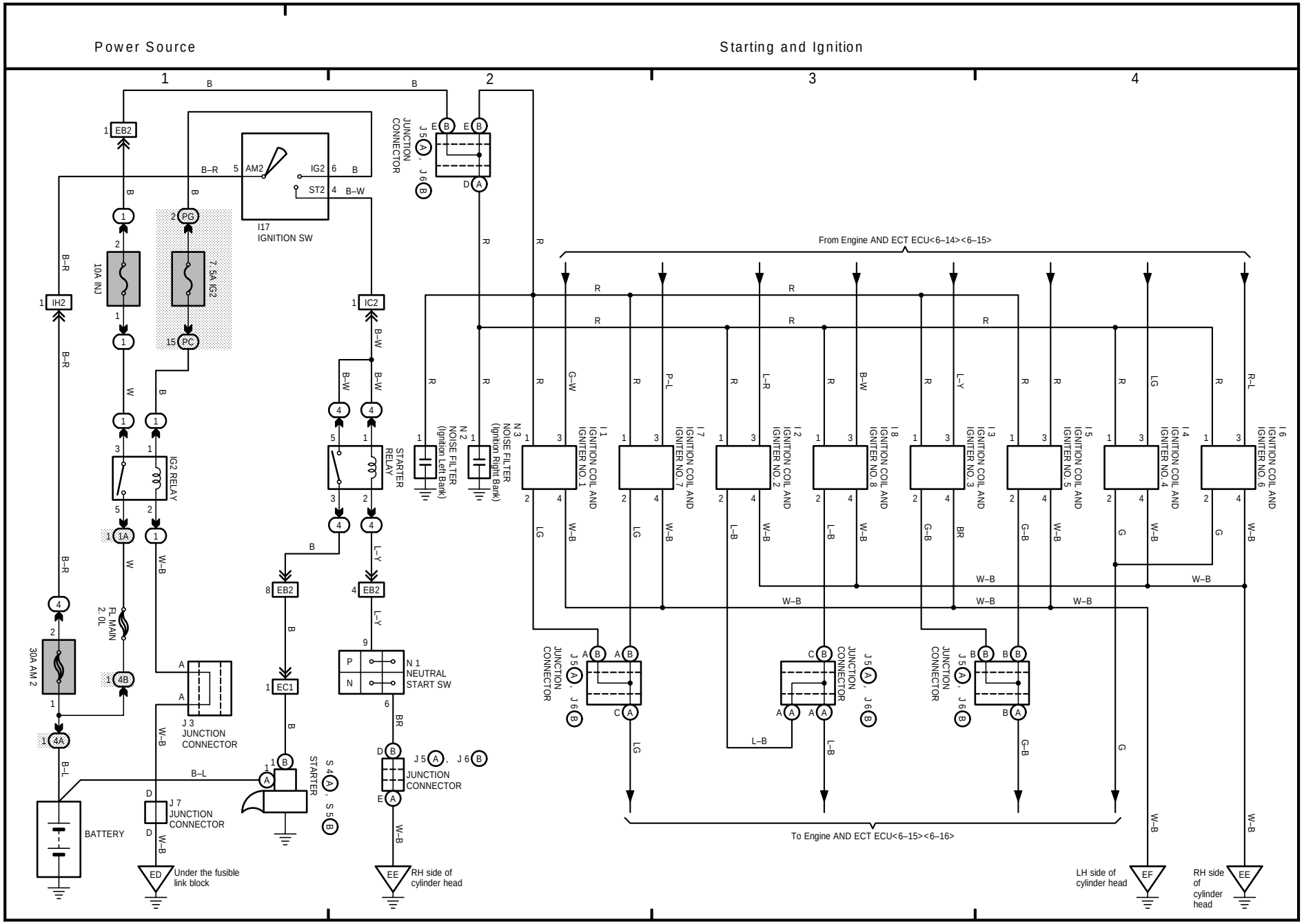
4 LS 430 (RHD)