HOW TO READ THIS SECTION

* The system shown here is an EXAMPLE ONLY. It is different to the actual circuit shown in the wiring diagram section.

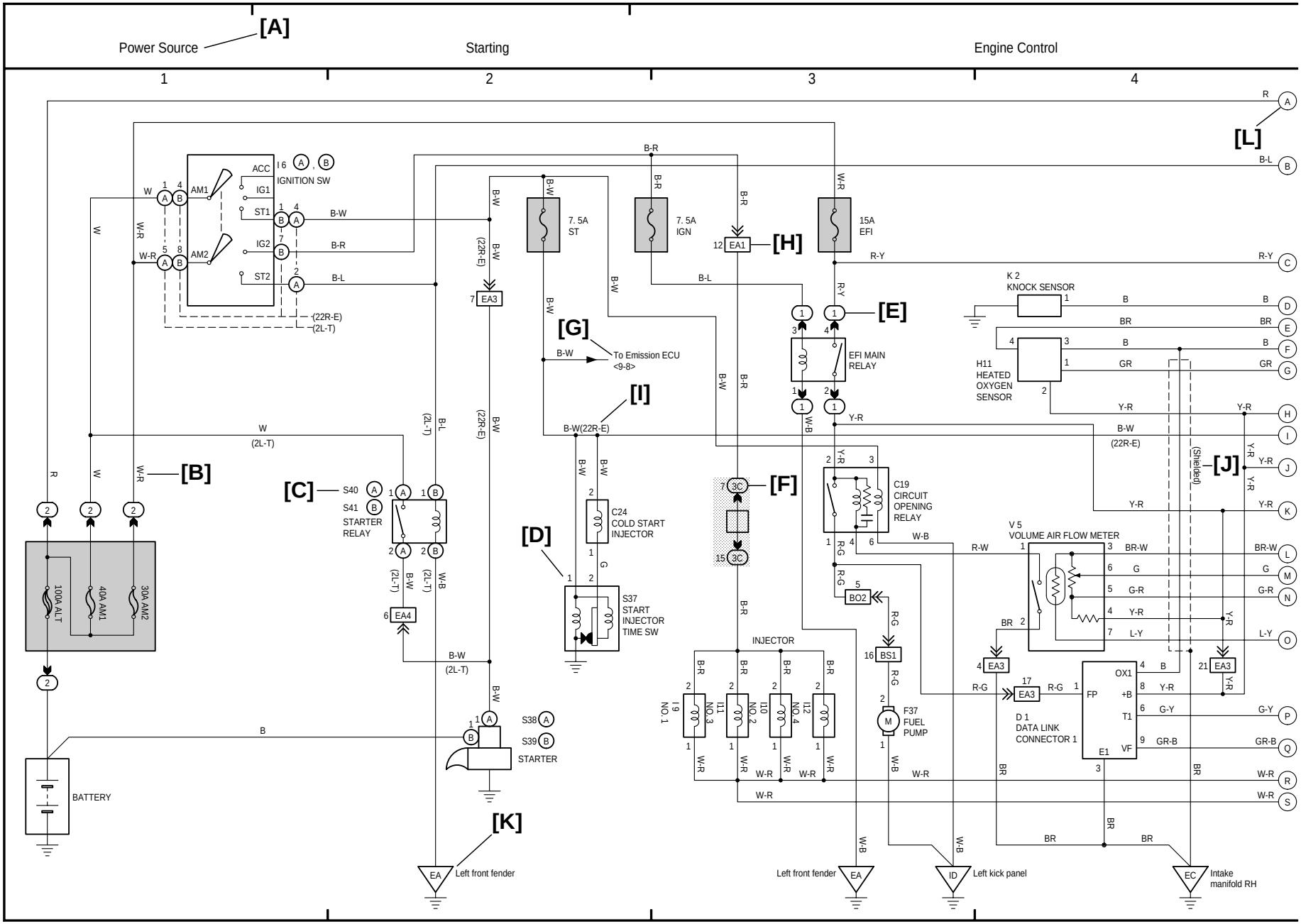

[A] : System Title

[B] : Indicates the wiring color.

Wire colors are indicated by an alphabetical code.

B = Black	W = White	BR = Brown
L = Blue	V = Violet	SB = Sky Blue
R = Red	G = Green	LG = Light Green
P = Pink	Y = Yellow	GR = Gray
O = Orange		

The first letter indicates the basic wire color and the second letter indicates the color of the stripe.

Example: L – Y

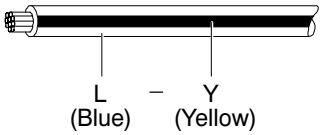

[C] : The position of the parts is the same as shown in the wiring diagram and wire routing.

[D] : Indicates the pin number of the connector. The numbering system is different for female and male connectors.

Example: Numbered in order from upper left to lower right / Numbered in order from upper right to lower left

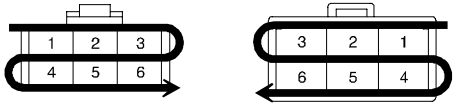

Female Male

The numbering system for the overall wiring diagram is the same as above.

[E] : Indicates a Relay Block. No shading is used and only the Relay Block No. is shown to distinguish it from the J/B.

Example: (1) Indicates Relay Block No.1

[F] : Junction Block (The number in the circle is the J/B No. and the connector code is shown beside it). Junction Blocks are shaded to clearly separate them from other parts.

Example:

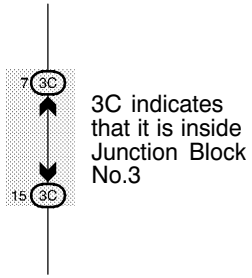

[G] : Indicates related system.

[H] : Indicates the wiring harness and wiring harness connector. The wiring harness with male terminal is shown with arrows (⩔). Outside numerals are pin numbers.

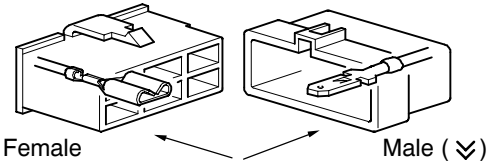

[I] : ( ) is used to indicate different wiring and connector, etc. when the vehicle model, engine type, or specification is different.

[J] : Indicates a shielded cable.

[K] : Indicates and located on ground point.

[L] : The same code occuring on the next page indicates that the wire harness is continuous.