# WIPER AND WASHER (RHD)

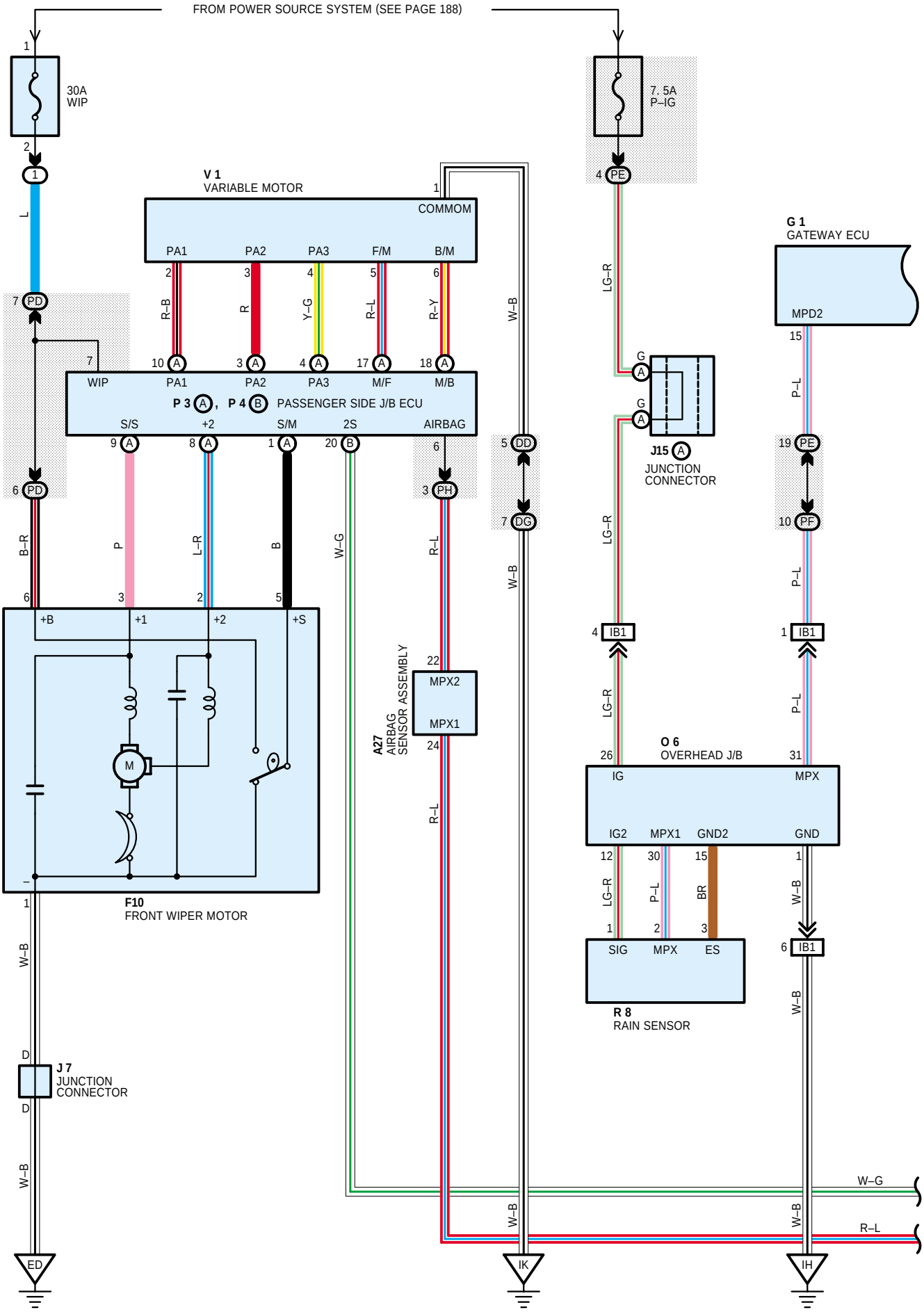

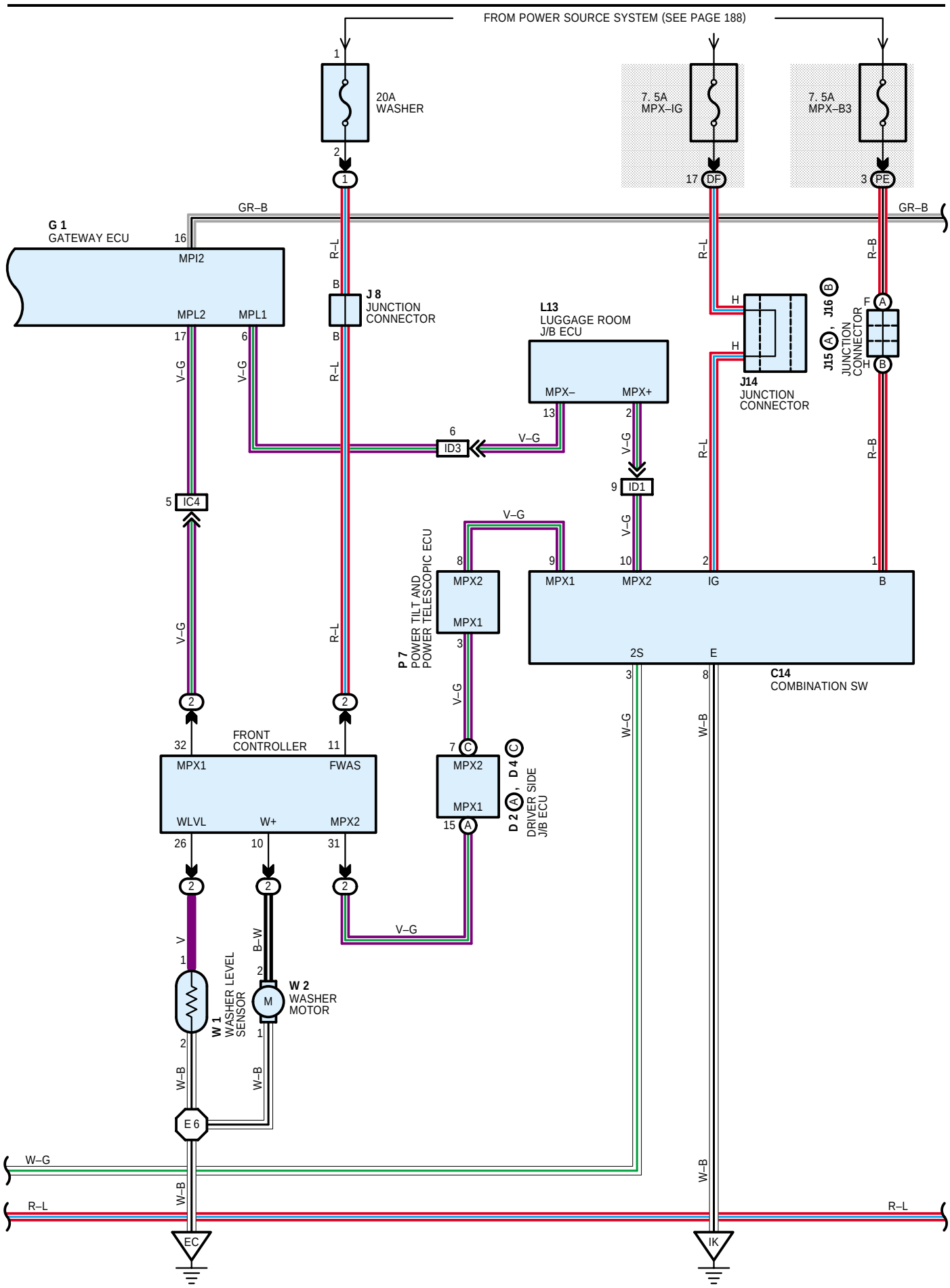
FROM POWER SOURCE SYSTEM (SEE PAGE 188)
20A
WASHER
7. 5A
MPX–IG
7. 5A
MPX–B3
17 DF
3 PE
GR–B
G 1
GATEWAY ECU
16
MPI2
MPL2
MPL1
17
6
V–G
R–L
B
J 8
JUNCTION
CONNECTOR
L13
LUGGAGE ROOM
J/B ECU
MPX–
MPX+
13
2
6
ID3
9
ID1
5
IC4
R–B
H
J14
JUNCTION
CONNECTOR
J16 B
J15 A
JUNCTION
CONNECTOR
F A
H B
P 7
POWER TILT AND
POWER TELESCOPIC ECU
MPX2
MPX1
8
9
10
2
1
IG
B
2S
E
3
8
C14
COMBINATION SW
W–G
W–B
FRONT
CONTROLLER
32
11
FWAS
WLVL
W+
26
10
31
7 C
15 A
D 2 A, D 4 C
DRIVER SIDE
J/B ECU
V
B–W
W 1
WASHER LEVEL
SENSOR
W 2
WASHER
MOTOR
M
E 6
EC
IK
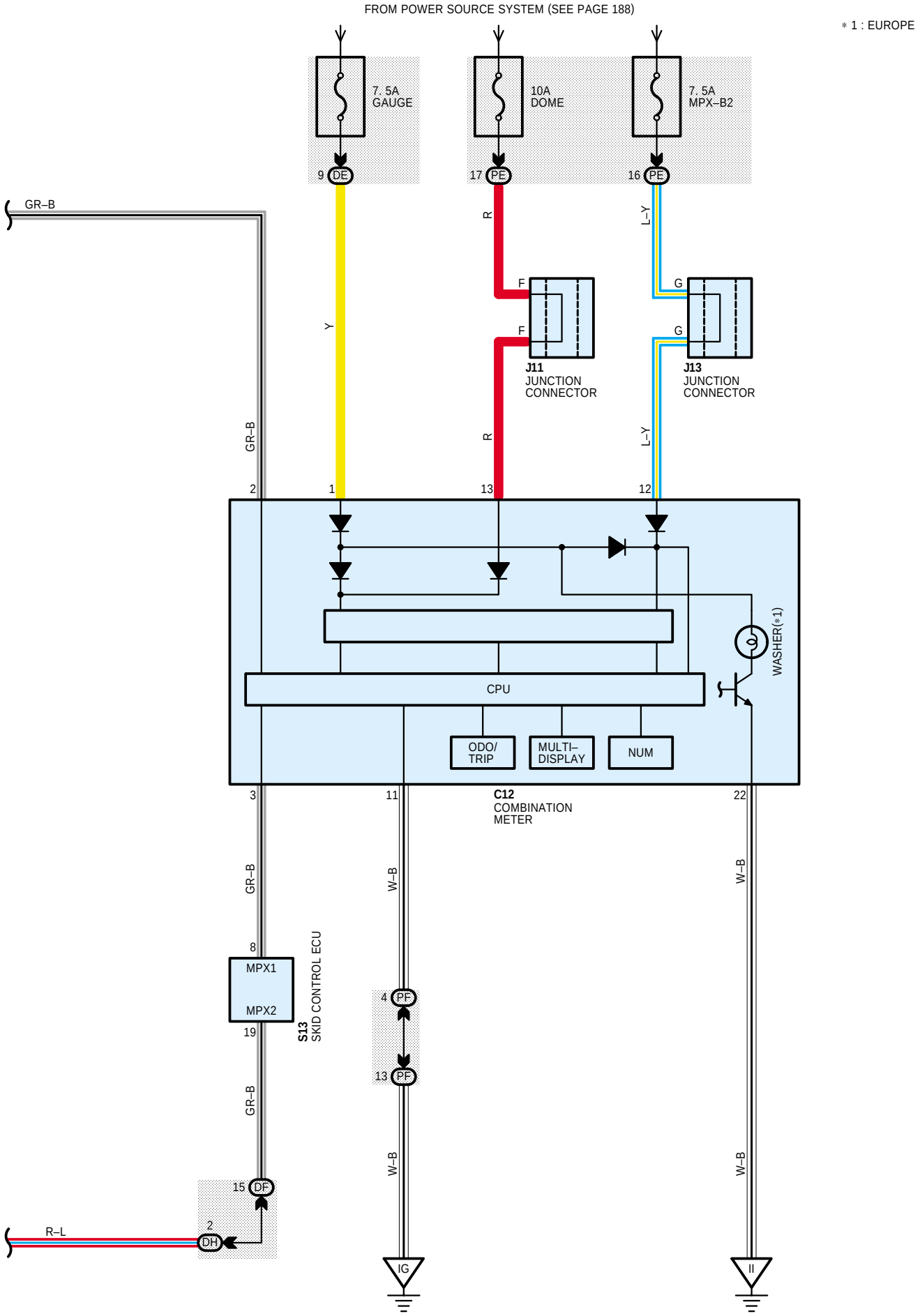
# WIPER AND WASHER (RHD)