VSC AND PPS (RHD)

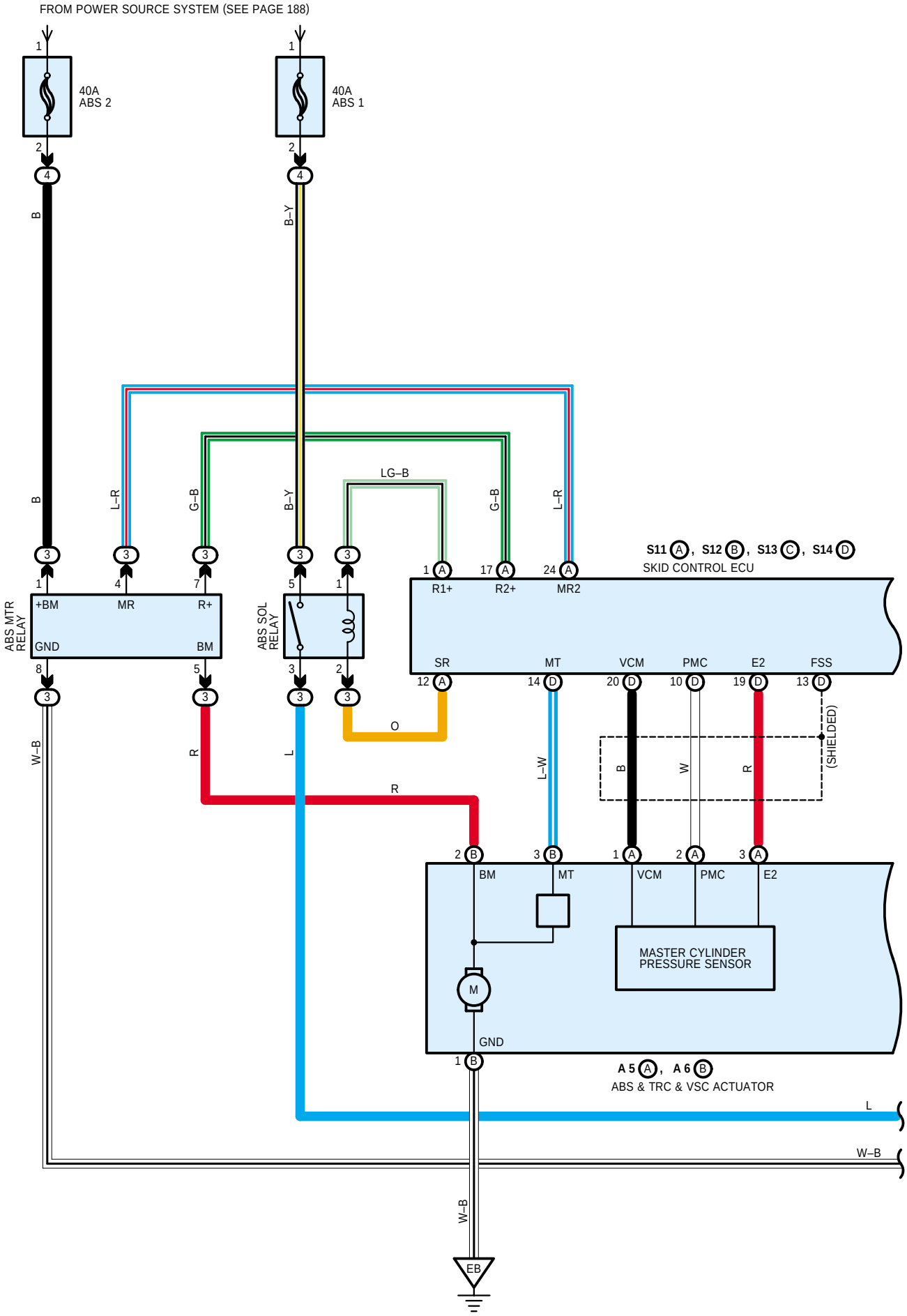

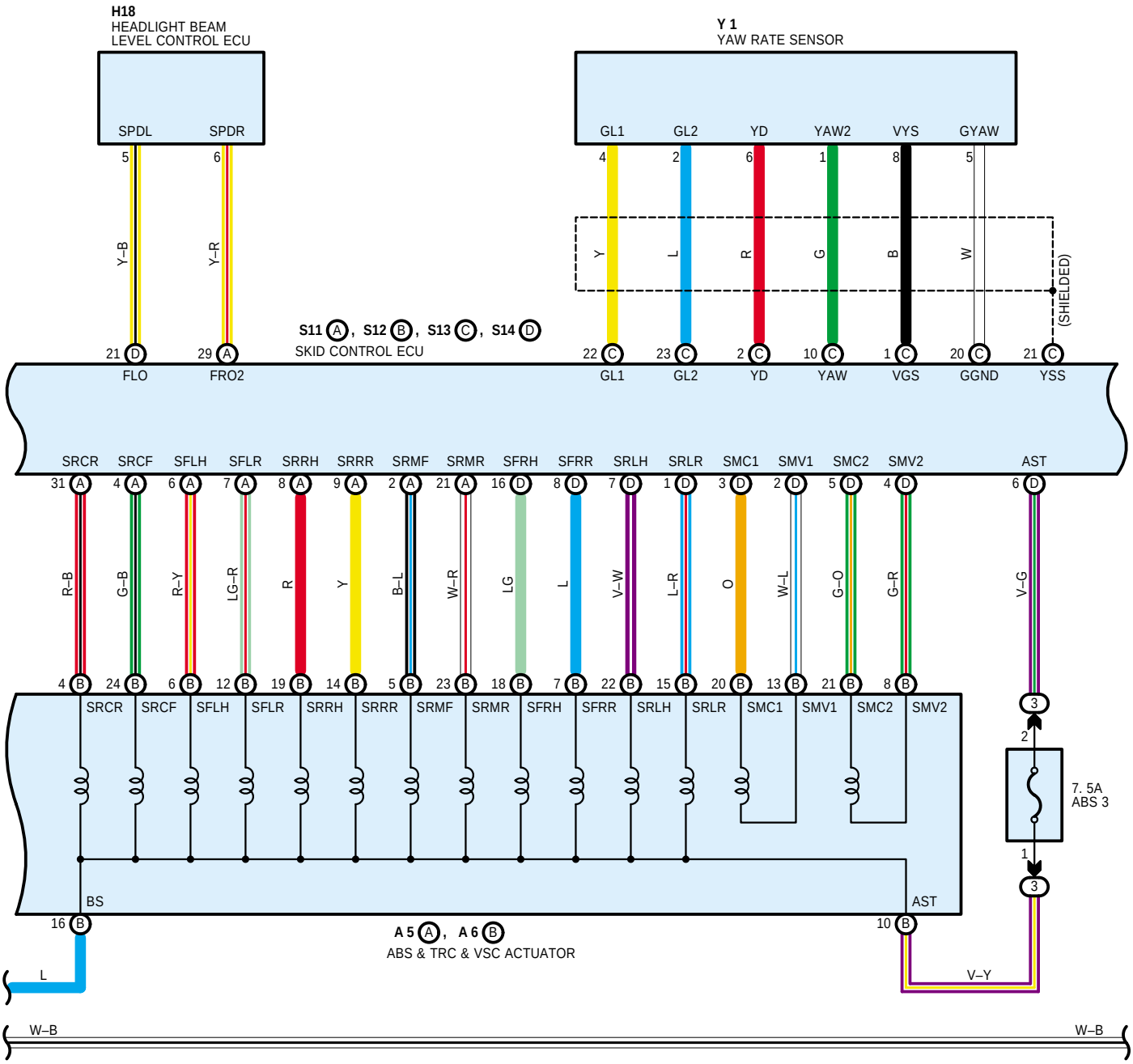
H18
HEADLIGHT BEAM
LEVEL CONTROL ECU
SPDL
SPDR
5
6
Y–B
Y–R
21 D
29 A
FLO
FRO2
Y 1
YAW RATE SENSOR
GL1
GL2
YD
YAW2
VYS
GYAW
4
2
6
1
8
5
Y
L
R
G
B
W
(SHIELDED)
S11 A, S12 B, S13 C, S14 D
SKID CONTROL ECU
22 C
23 C
2 C
10 C
1 C
20 C
21 C
GL1
GL2
YD
YAW
VGS
GGND
YSS
SRCR
SRCF
SFLH
SFLR
SRRH
SRRR
SRMF
SRMR
SFRH
SFRR
SRLH
SRLR
SMC1
SMV1
SMC2
SMV2
AST
31 A
4 A
6 A
7 A
8 A
9 A
2 A
21 A
16 D
8 D
7 D
1 D
3 D
2 D
5 D
4 D
6 D
R–B
G–B
R–Y
LG–R
R
Y
B–L
W–R
LG
L
V–W
L–R
O
W–L
G–O
G–R
V–G
4 B
24 B
6 B
12 B
19 B
14 B
5 B
23 B
18 B
7 B
22 B
15 B
20 B
13 B
21 B
8 B
3
2
7. 5A
ABS 3
1
3
BS
AST
16 B
10 B
A 5 A, A 6 B
ABS & TRC & VSC ACTUATOR
L
V–Y
W–B
W–B

VSC AND PPS (RHD)

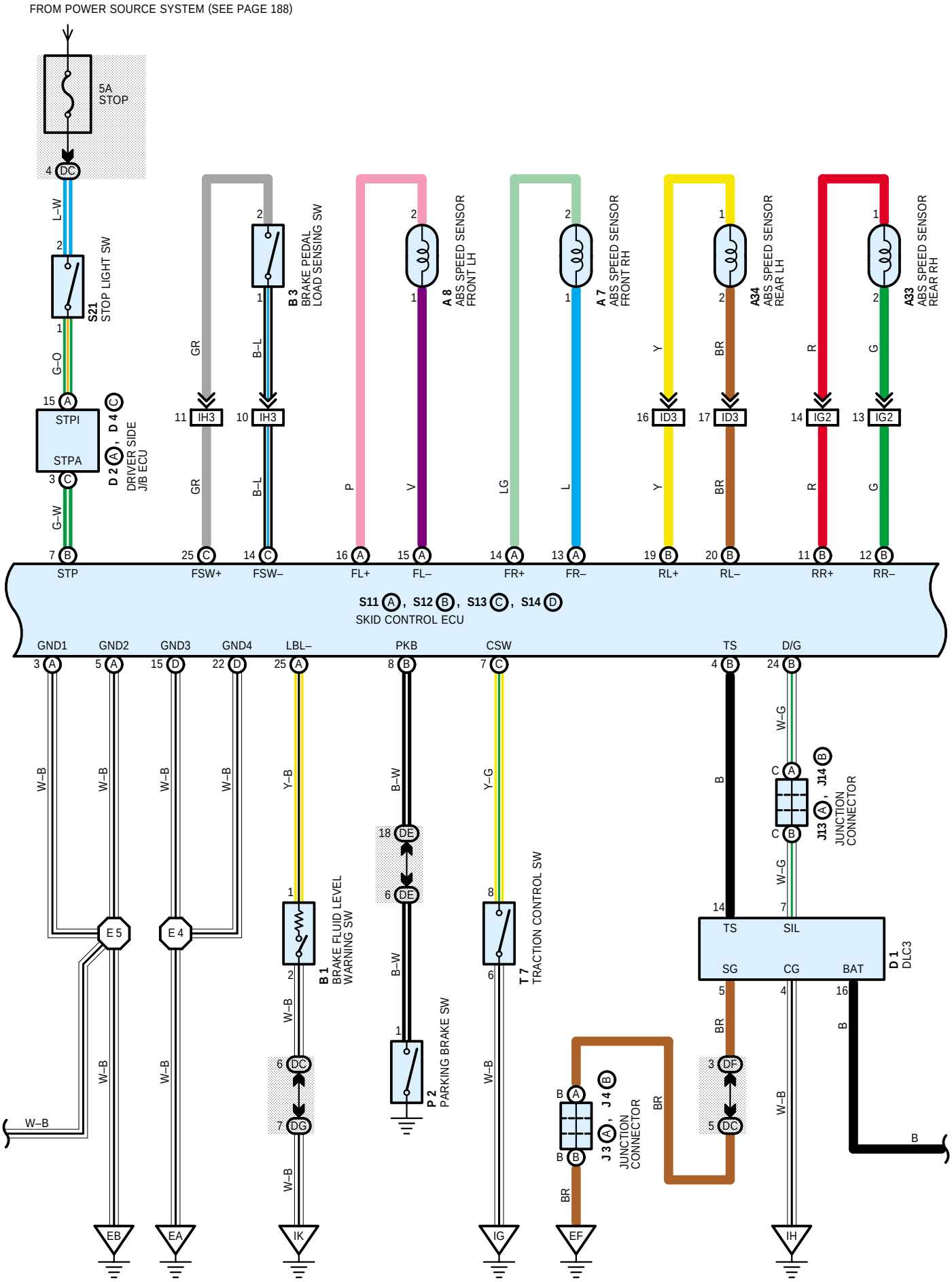

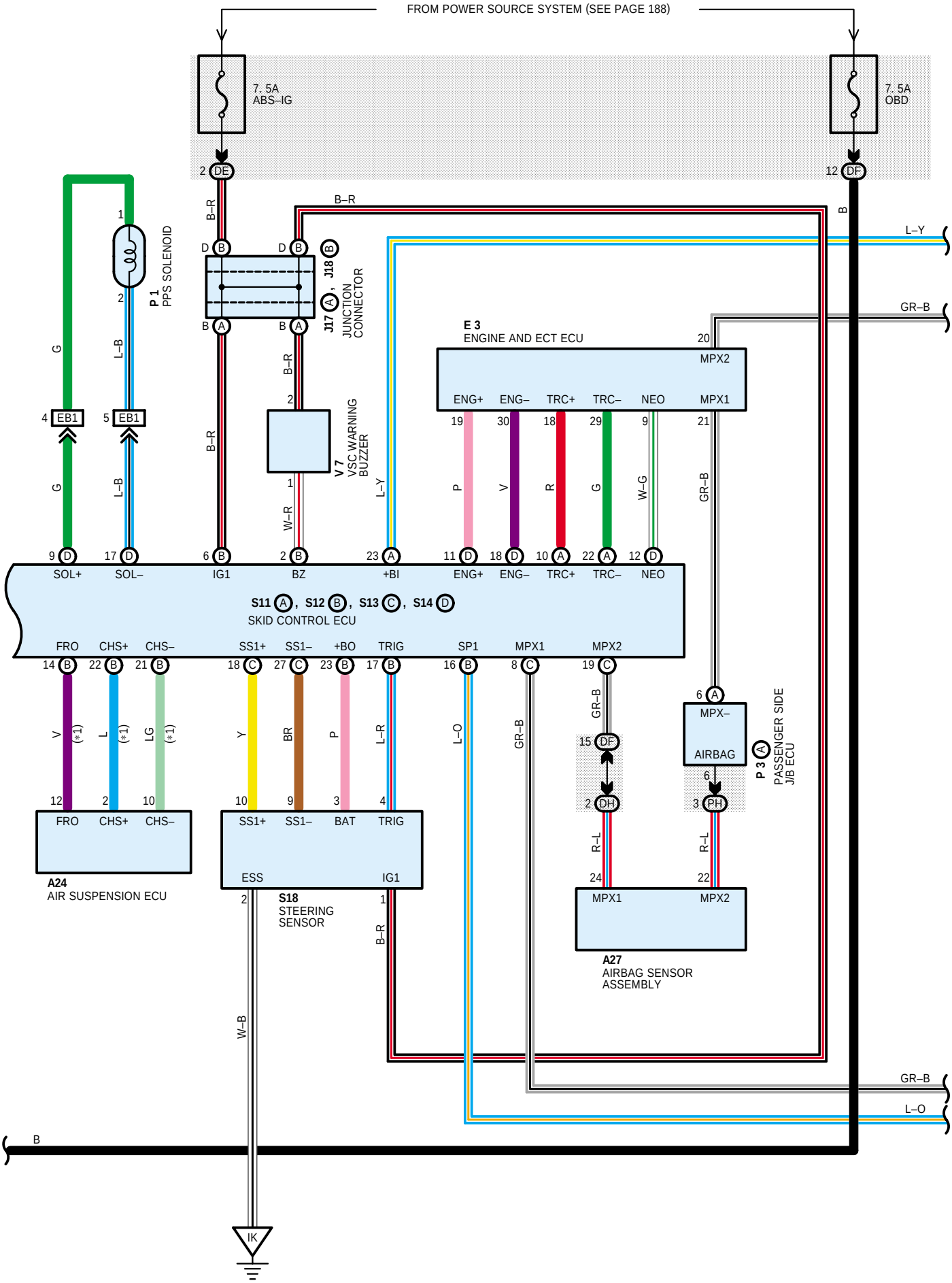
FROM POWER SOURCE SYSTEM (SEE PAGE 188)
7. 5A
ABS–IG
7. 5A
OBD
P 1
PPS SOLENOID
J17 A, J18 B
JUNCTION
CONNECTOR
V 7
VSC WARNING
BUZZER
E 3
ENGINE AND ECT ECU
MPX2
ENG+
ENG–
TRC+
TRC–
NEO
MPX1
SOL+
SOL–
IG1
BZ
+BI
S11 A, S12 B, S13 C, S14 D
SKID CONTROL ECU
FRO
CHS+
CHS–
SS1+
SS1–
+BO
TRIG
SP1
MPX–
AIRBAG
P 3 A
PASSENGER SIDE
J/B ECU
A24
AIR SUSPENSION ECU
BAT
ESS
S18
STEERING
SENSOR
A27
AIRBAG SENSOR
ASSEMBLY
IK

VSC AND PPS (RHD)
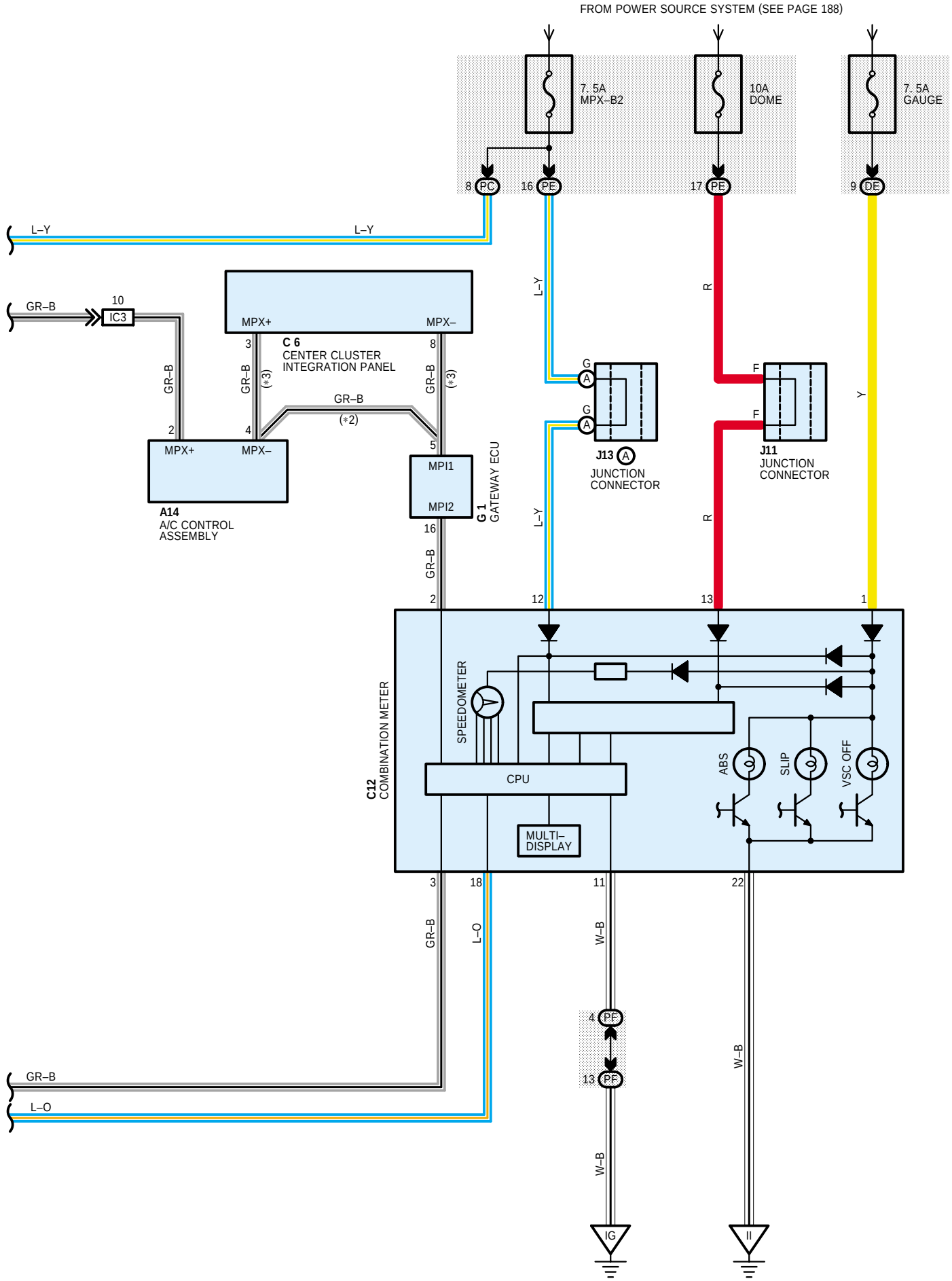
* 2 : W/ LEXUS NAVIGATION SYSTEM
* 3 : W/O LEXUS NAVIGATION SYSTEM