VIBRATION SEAT (RHD)

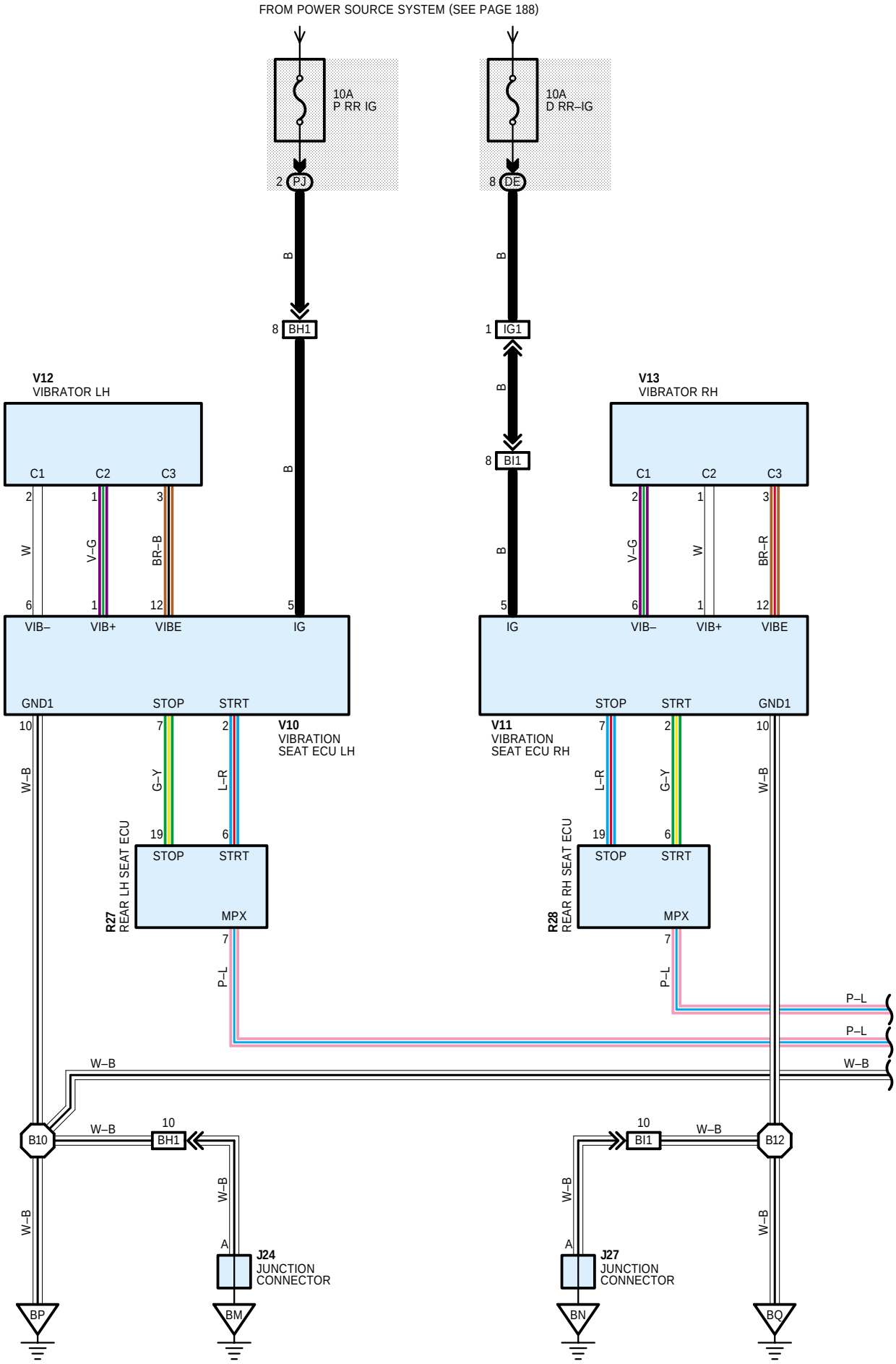

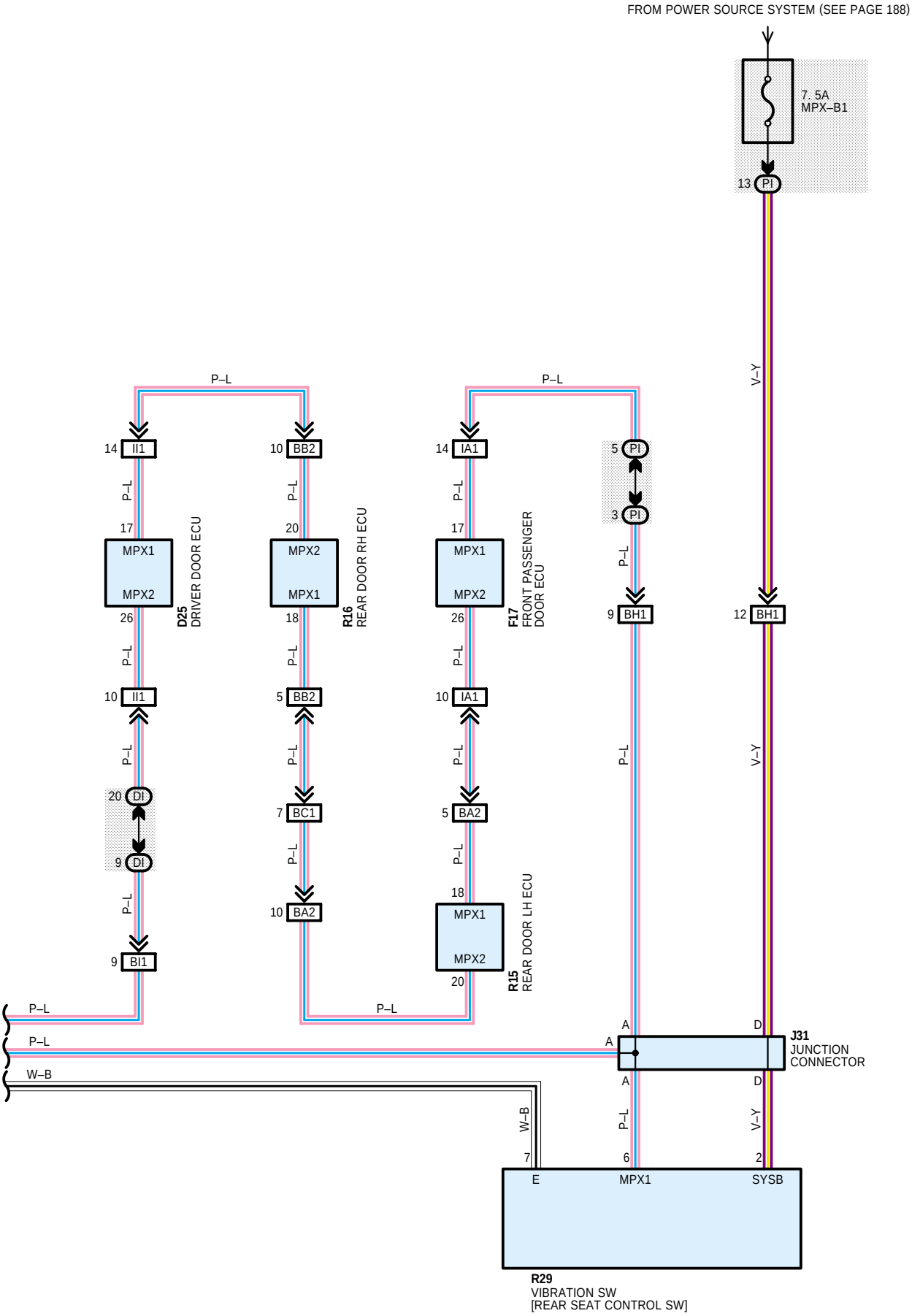
FROM POWER SOURCE SYSTEM (SEE PAGE 188)
7. 5A
MPX–B1
13 PI
V–Y
P–L
14 II1
10 BB2
14 IA1
5 PI
3 PI
17
MPX1
MPX2
26
D25
DRIVER DOOR ECU
20
MPX2
MPX1
18
R16
REAR DOOR RH ECU
17
MPX1
MPX2
26
F17
FRONT PASSENGER
DOOR ECU
9 BH1
12 BH1
10 II1
5 BB2
10 IA1
20 DI
9 DI
7 BC1
5 BA2
9 BI1
10 BA2
18
MPX1
MPX2
20
R15
REAR DOOR LH ECU
W–B
A
D
J31
JUNCTION
CONNECTOR
7
E
6
MPX1
2
SYSB
R29
VIBRATION SW
[REAR SEAT CONTROL SW]