TURN SIGNAL AND HAZARD WARNING LIGHT (RHD)

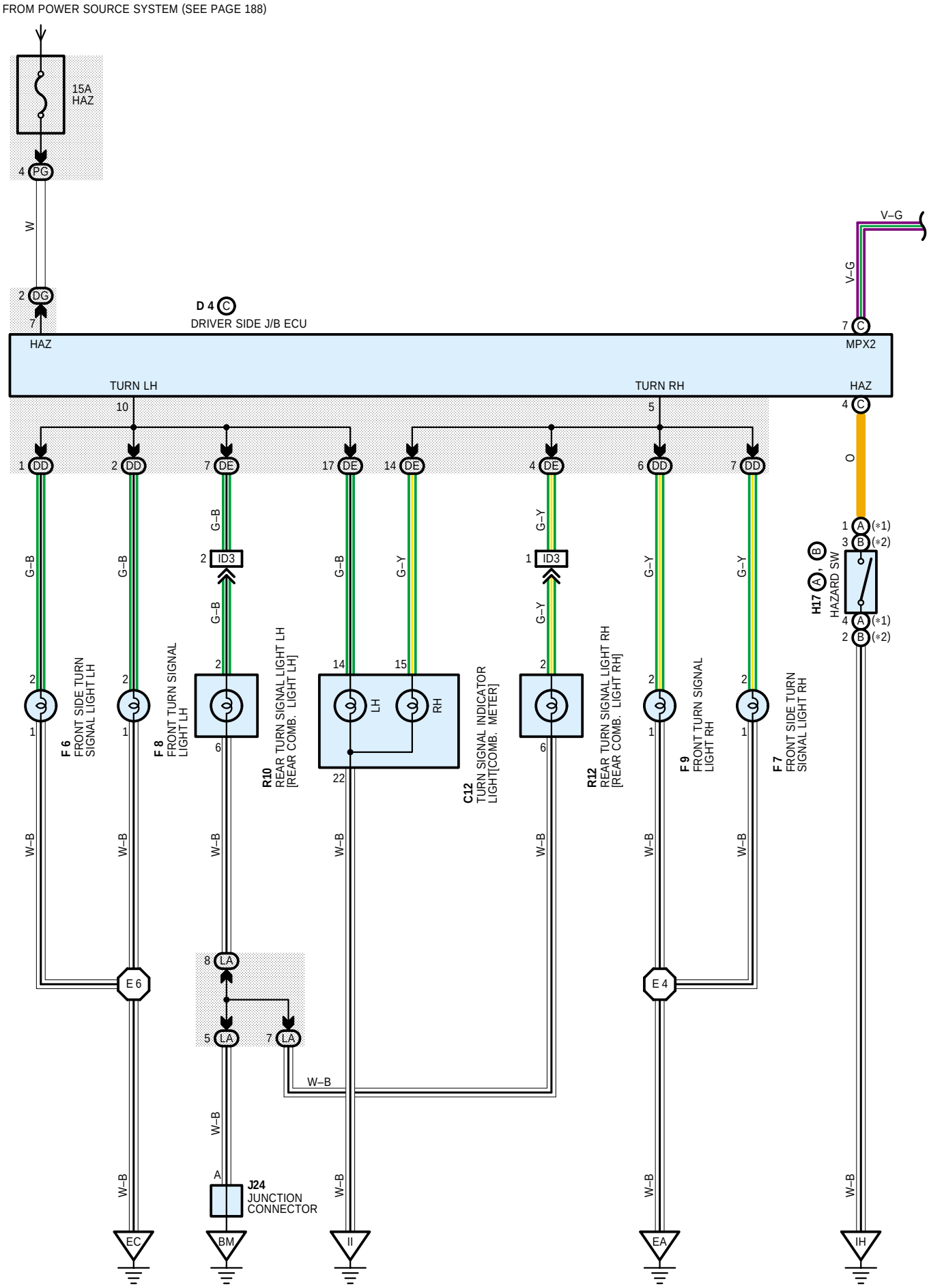
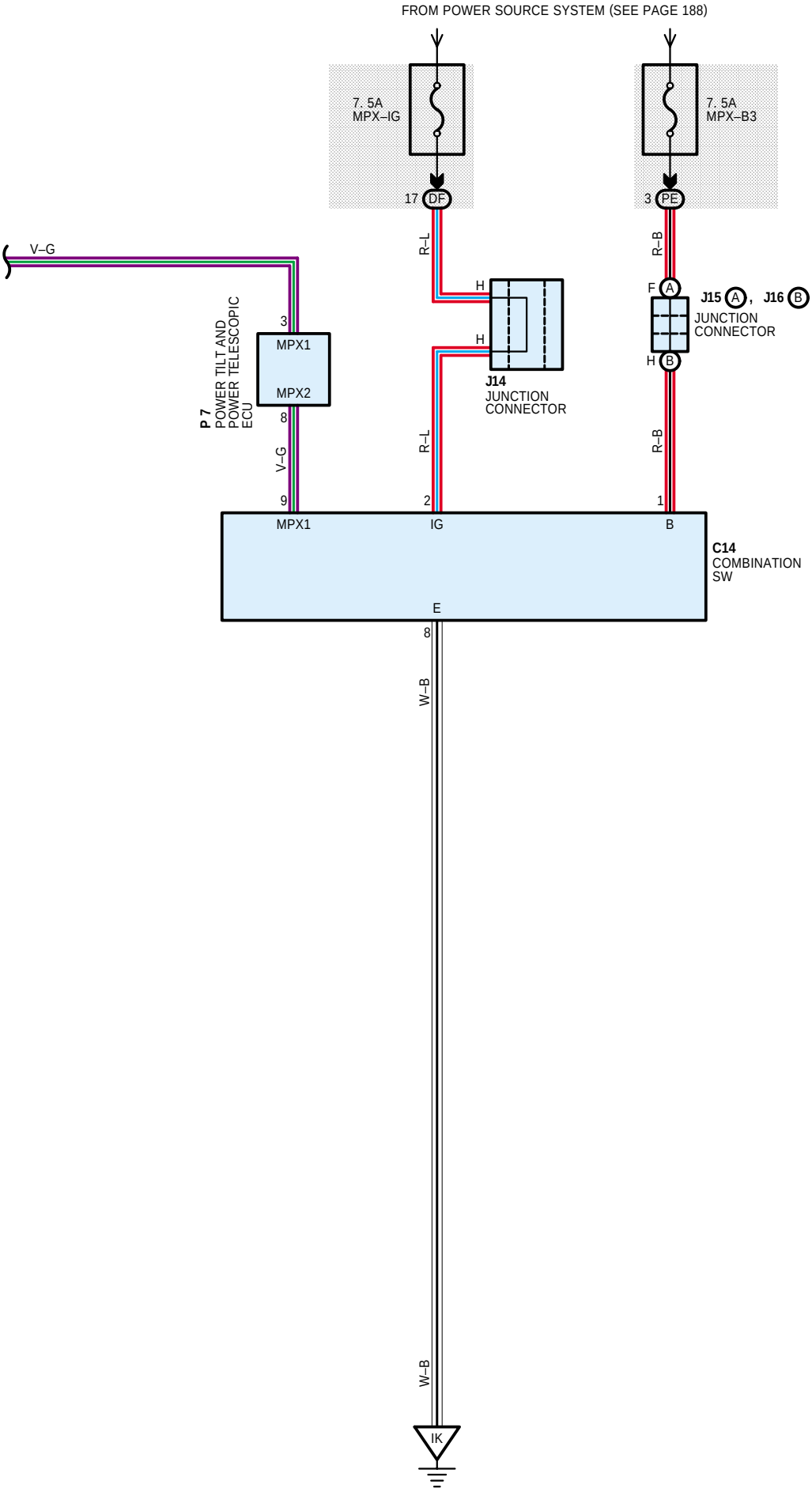
* 1 : W/ LEXUS NAVIGATION SYSTEM
* 2 : W/O LEXUS NAVIGATION SYSTEM