TAILLIGHT (LHD)

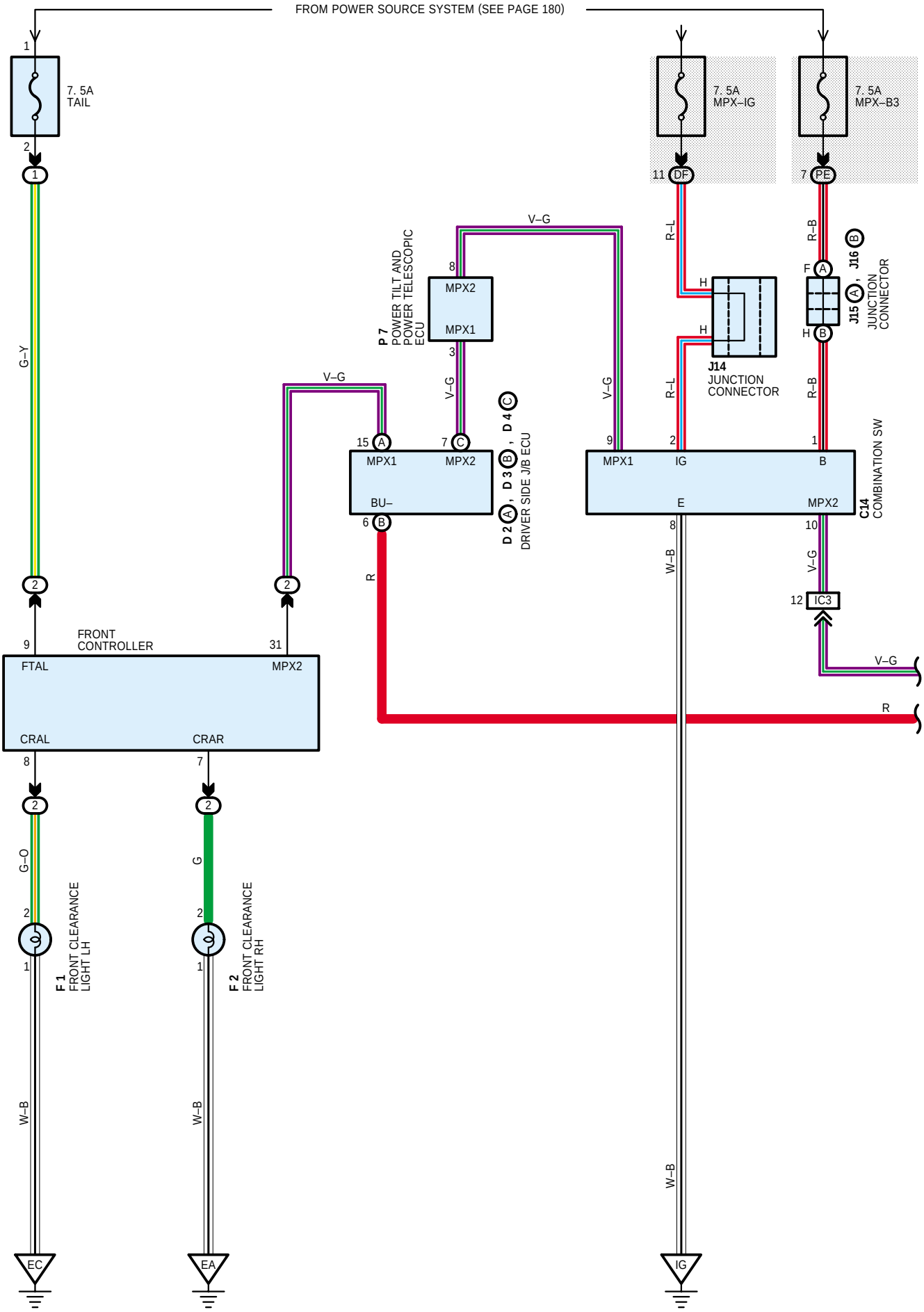

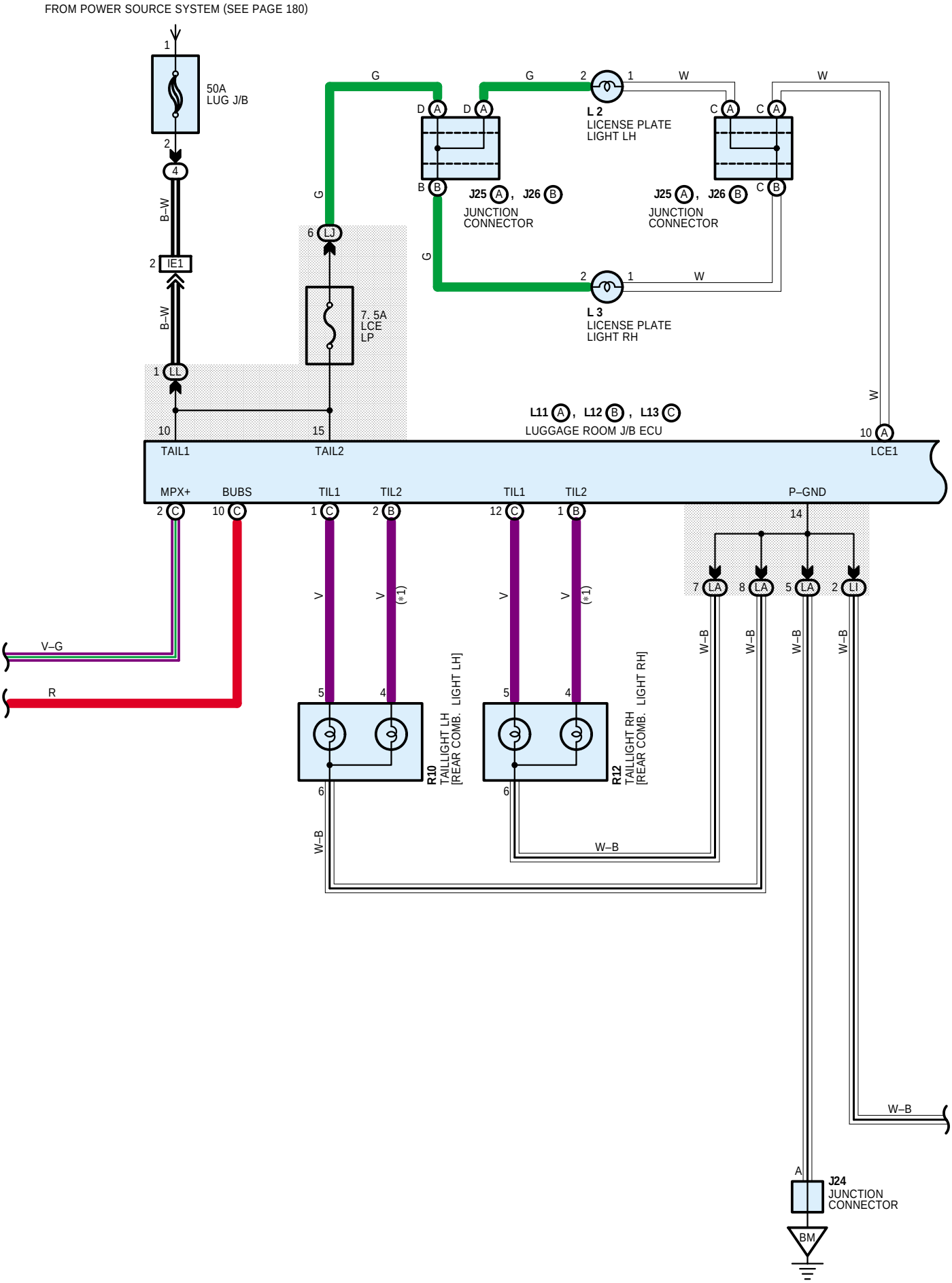
FROM POWER SOURCE SYSTEM (SEE PAGE 180)
50A
LUG J/B
IE1
B–W
7. 5A
LCE
LP
L 2
LICENSE PLATE
LIGHT LH
L 3
LICENSE PLATE
LIGHT RH
J25 A , J26 B
JUNCTION
CONNECTOR
L11 A , L12 B , L13 C
LUGGAGE ROOM J/B ECU
TAIL1
TAIL2
LCE1
MPX+
BUBS
TIL1
TIL2
P–GND
V–G
R
R10
TAILLIGHT LH
[REAR COMB. LIGHT LH]
R12
TAILLIGHT RH
[REAR COMB. LIGHT RH]
W–B
J24
JUNCTION
CONNECTOR
BM

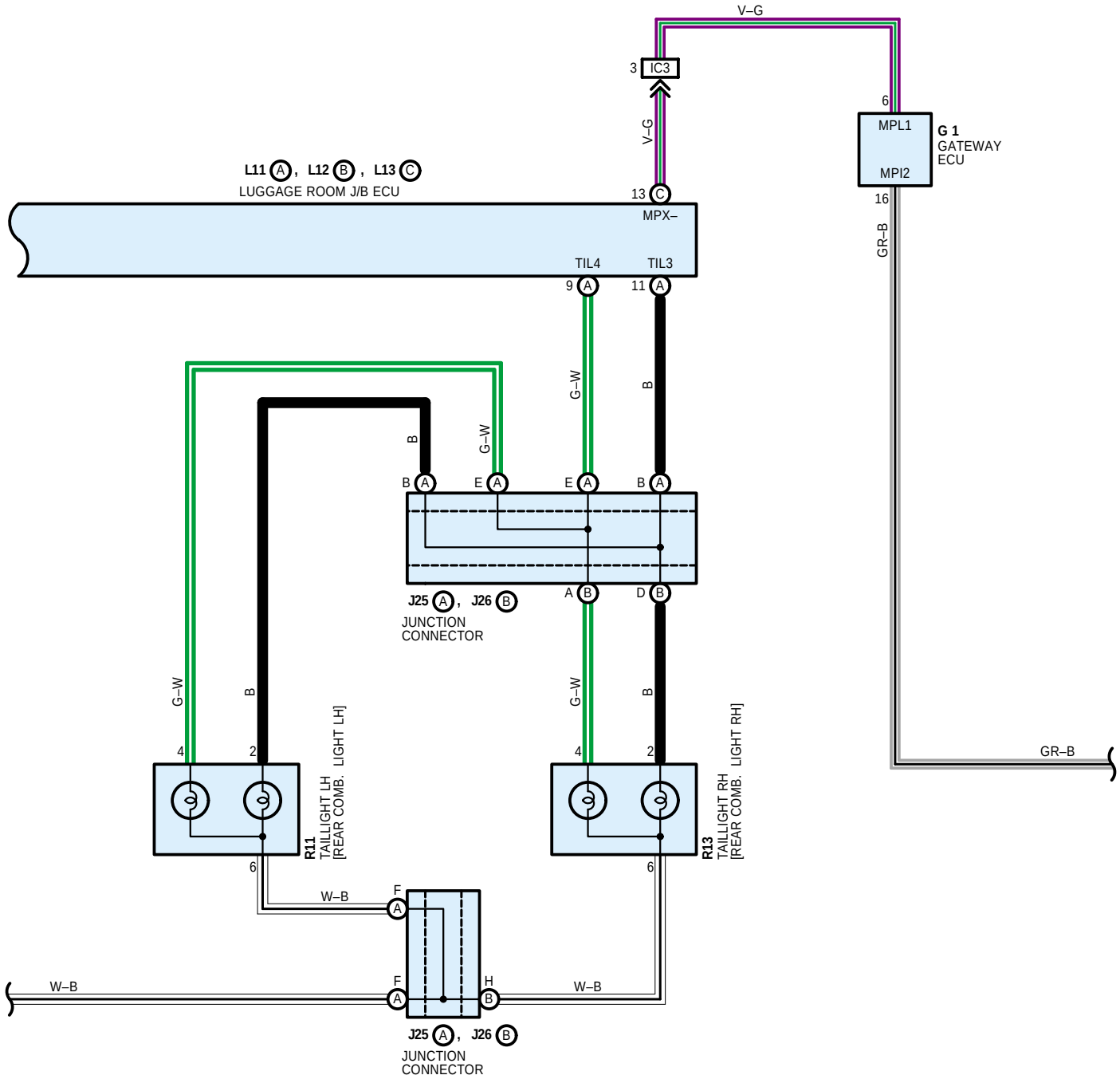
V–G
3 IC3
V–G
6
MPL1
MPI2
G 1
GATEWAY
ECU
16
GR–B
L11 A , L12 B , L13 C
LUGGAGE ROOM J/B ECU
13 C
MPX–
TIL4
TIL3
9 A
11 A
G–W
B
B
G–W
B A
E A
E A
B A
J25 A , J26 B
JUNCTION
CONNECTOR
A B
D B
G–W
B
G–W
B
4
2
4
2
R11
TAILLIGHT LH
[REAR COMB. LIGHT LH]
R13
TAILLIGHT RH
[REAR COMB. LIGHT RH]
6
6
GR–B
W–B
F
A
W–B
F
A
H
B
W–B
J25 A , J26 B
JUNCTION
CONNECTOR

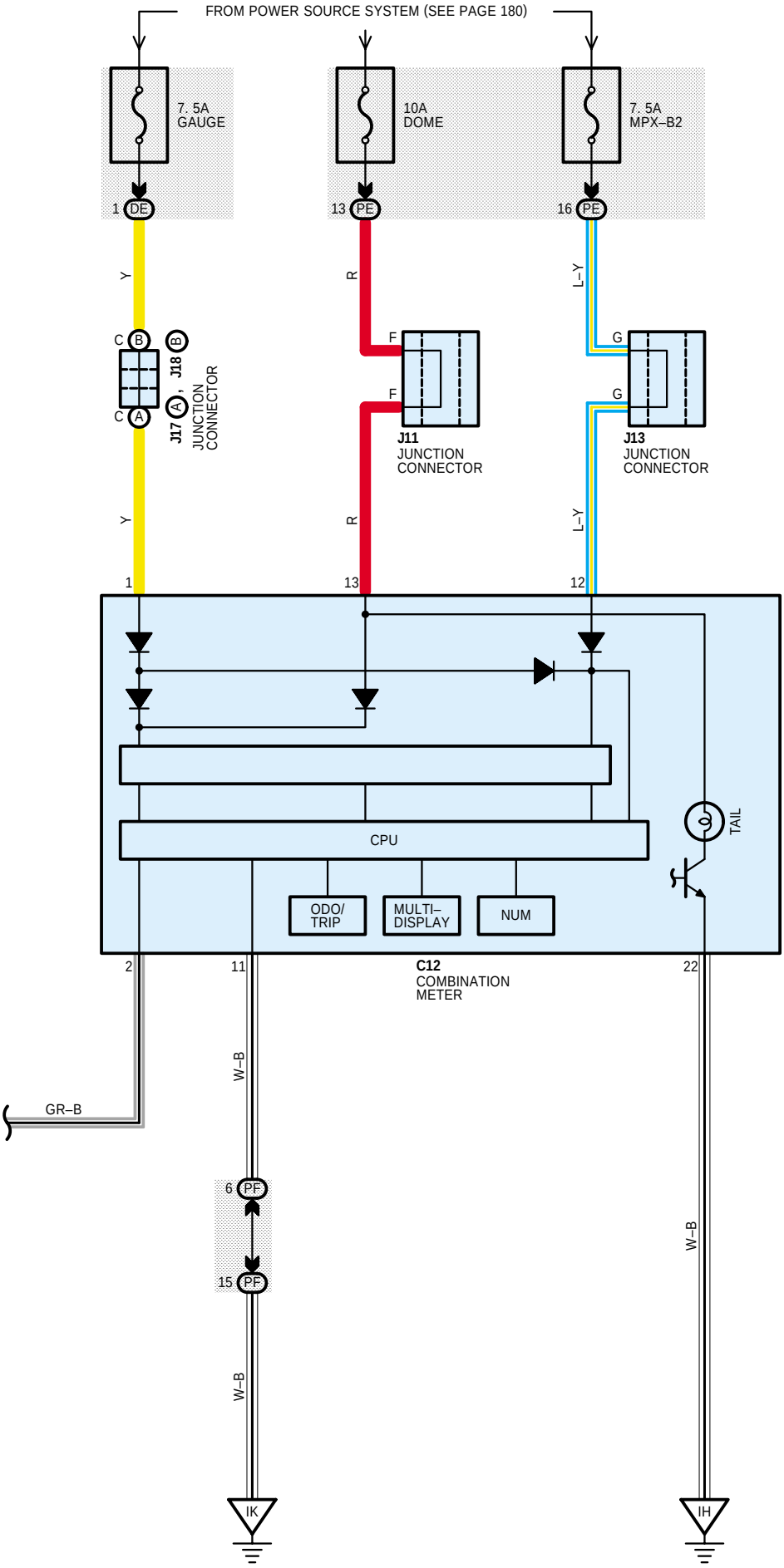
FROM POWER SOURCE SYSTEM (SEE PAGE 180)
7. 5A
GAUGE
10A
DOME
7. 5A
MPX–B2
1 DE
13 PE
16 PE
Y
R
L–Y
C B
B
J18
C A
A
J17
JUNCTION
CONNECTOR
F
F
G
G
J11
JUNCTION
CONNECTOR
J13
JUNCTION
CONNECTOR
Y
R
L–Y
1
13
12
CPU
ODO/
TRIP
MULTI–
DISPLAY
NUM
TAIL
2
11
22
C12
COMBINATION
METER
GR–B
W–B
6 PF
15 PF
W–B
W–B
IK
IH