SRS (RHD)

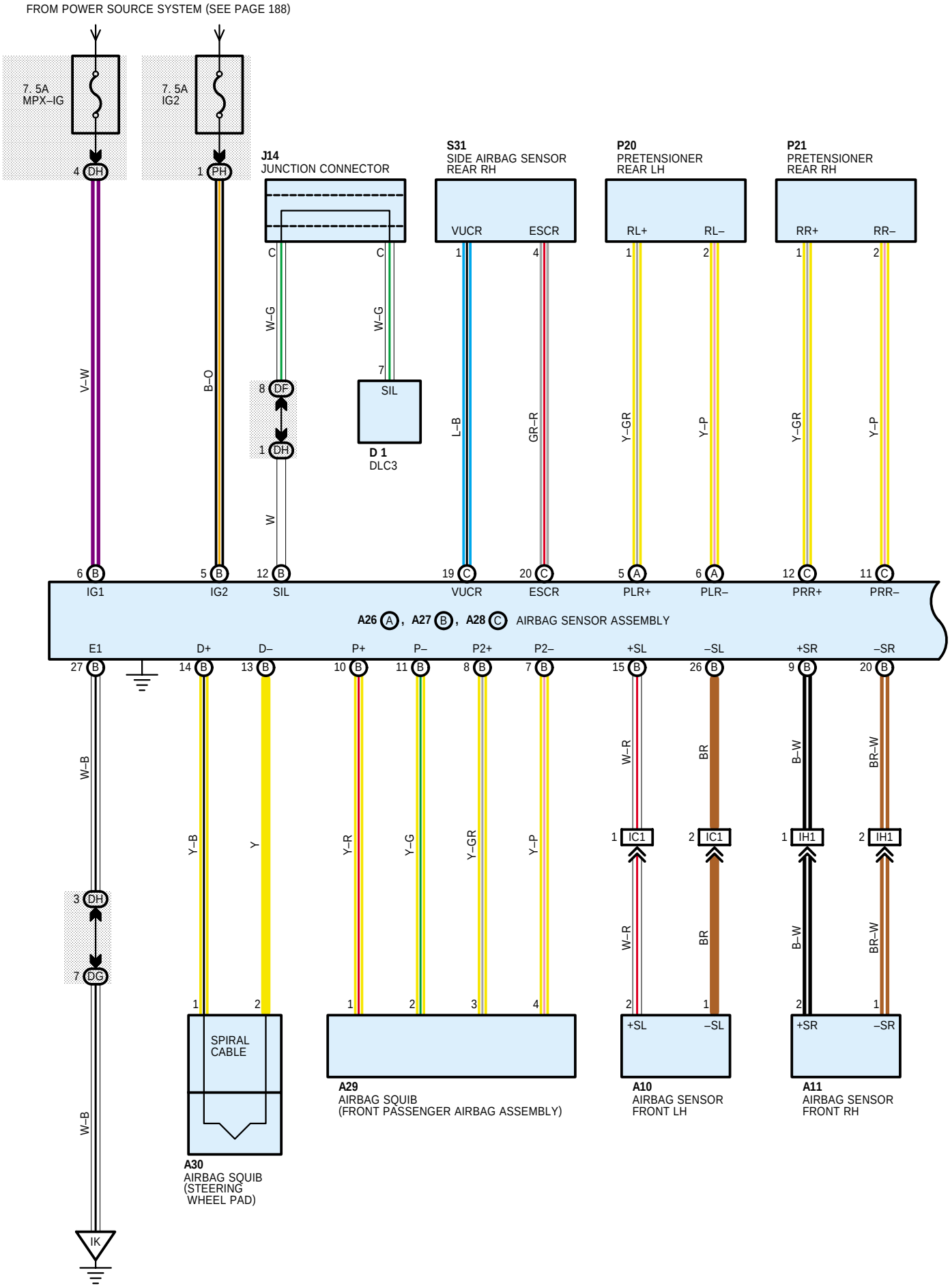
FROM POWER SOURCE SYSTEM (SEE PAGE 188)
7. 5A
MPX–IG
7. 5A
IG2
J14
JUNCTION CONNECTOR
S31
SIDE AIRBAG SENSOR
REAR RH
P20
PRETENSIONER
REAR LH
P21
PRETENSIONER
REAR RH
VUCR
ESCR
RL+
RL–
RR+
RR–
SIL
D 1
DLC3
IG1
IG2
SIL
VUCR
ESCR
PLR+
PLR–
PRR+
PRR–
A26 A, A27 B, A28 C AIRBAG SENSOR ASSEMBLY
E1
D+
D–
P+
P–
P2+
P2–
+SL
–SL
+SR
–SR
SPIRAL
CABLE
A30
AIRBAG SQUIB
(STEERING
WHEEL PAD)
A29
AIRBAG SQUIB
(FRONT PASSENGER AIRBAG ASSEMBLY)
A10
AIRBAG SENSOR
FRONT LH
A11
AIRBAG SENSOR
FRONT RH
IK

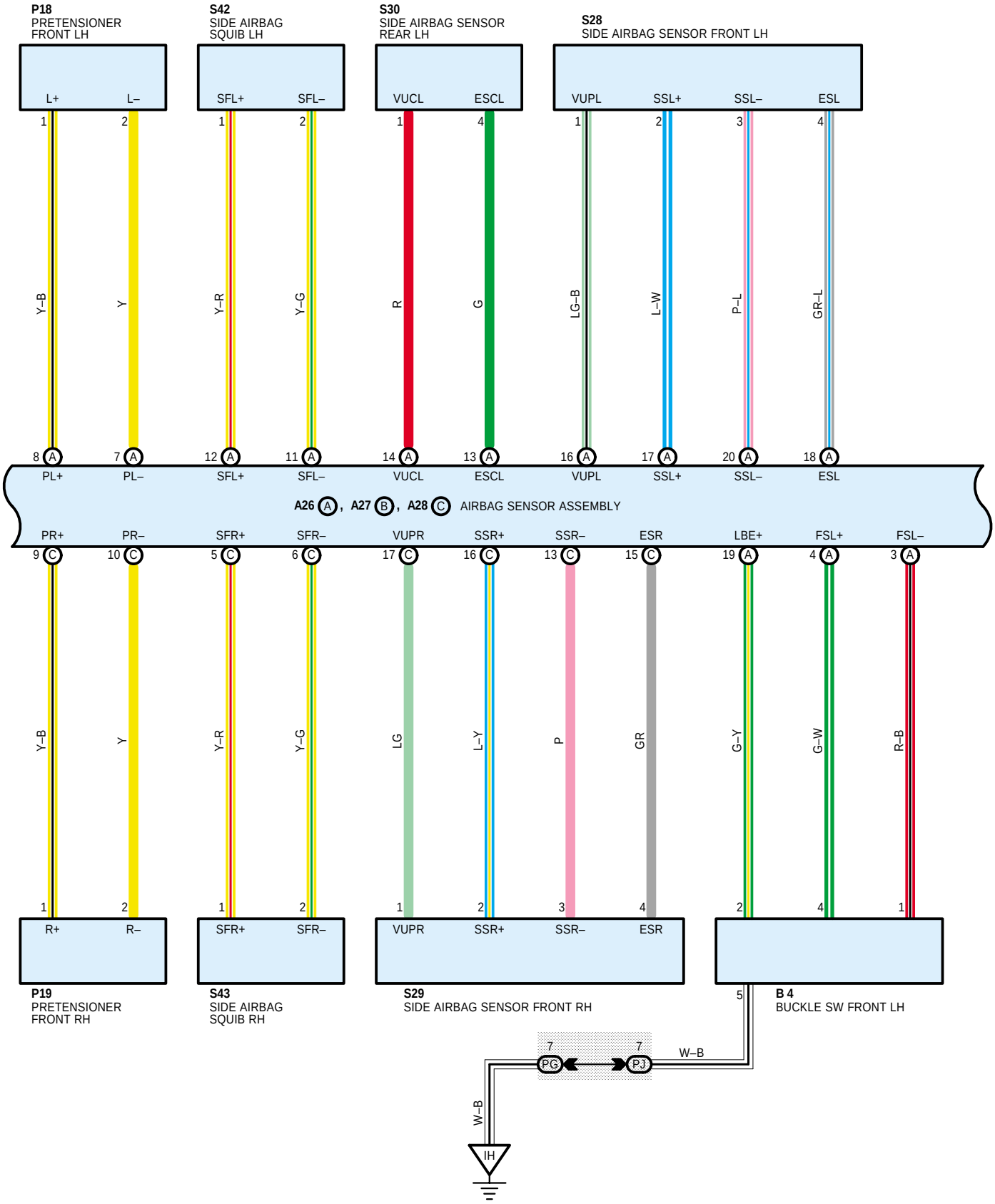
P18
PRETENSIONER
FRONT LH
S42
SIDE AIRBAG
SQUIB LH
S30
SIDE AIRBAG SENSOR
REAR LH
S28
SIDE AIRBAG SENSOR FRONT LH
L+
L–
SFL+
SFL–
VUCL
ESCL
VUPL
SSL+
SSL–
ESL
Y–B
Y
Y–R
Y–G
R
G
LG–B
L–W
P–L
GR–L
PL+
PL–
SFL+
SFL–
VUCL
ESCL
VUPL
SSL+
SSL–
ESL
A26 A, A27 B, A28 C AIRBAG SENSOR ASSEMBLY
PR+
PR–
SFR+
SFR–
VUPR
SSR+
SSR–
ESR
LBE+
FSL+
FSL–
Y–B
Y
Y–R
Y–G
LG
L–Y
P
GR
G–Y
G–W
R–B
R+
R–
SFR+
SFR–
VUPR
SSR+
SSR–
ESR
P19
PRETENSIONER
FRONT RH
S43
SIDE AIRBAG
SQUIB RH
S29
SIDE AIRBAG SENSOR FRONT RH
B 4
BUCKLE SW FRONT LH
PG
PJ
W–B
W–B
IH

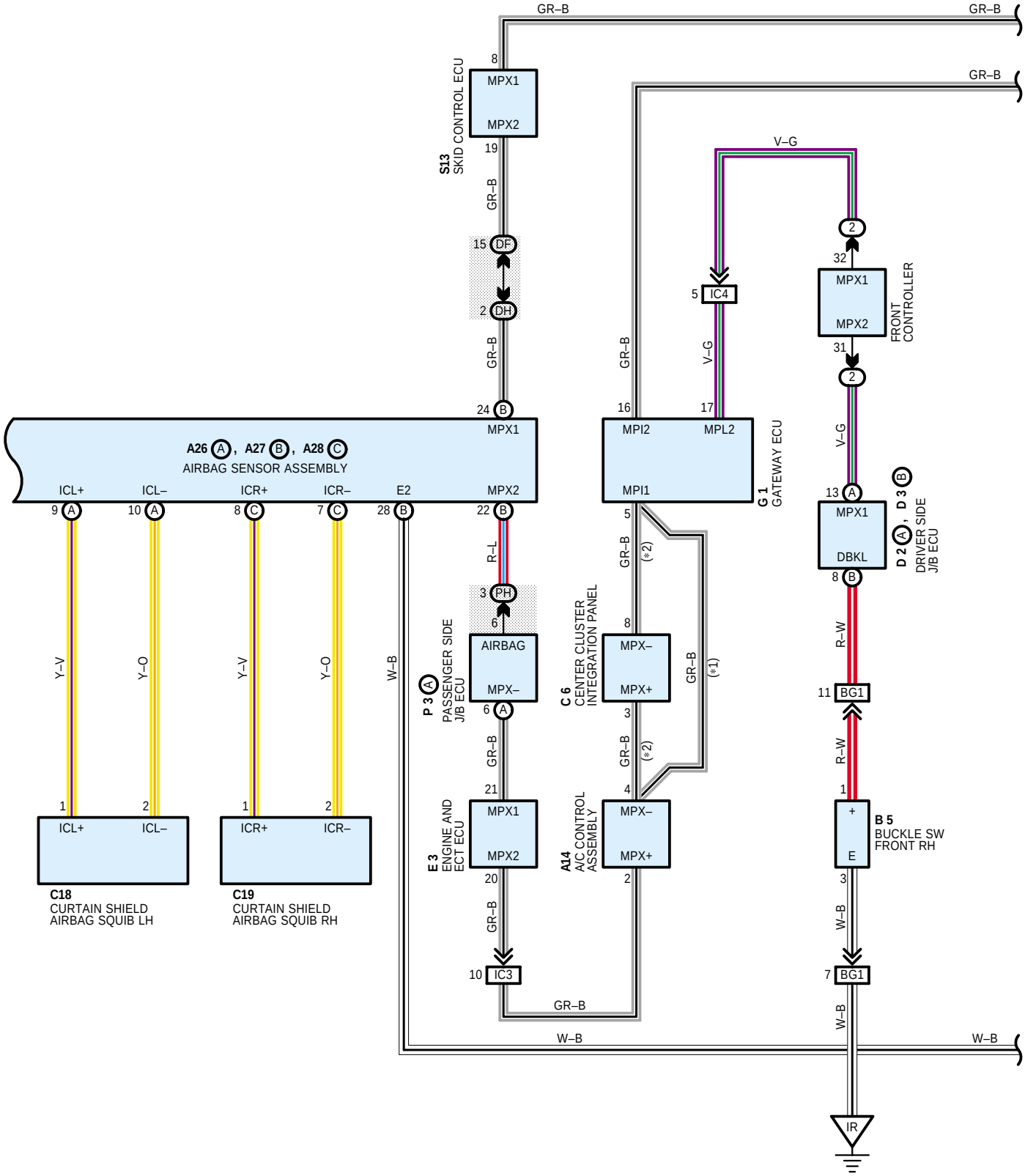
GR–B
GR–B
GR–B
S13
SKID CONTROL ECU
MPX1
MPX2
V–G
IC4
FRONT
CONTROLLER
A26 A, A27 B, A28 C
AIRBAG SENSOR ASSEMBLY
ICL+
ICL–
ICR+
ICR–
E2
MPX1
MPX2
MPI2
MPL2
MPI1
G 1
GATEWAY ECU
DBKL
D 2 A, D 3 B
DRIVER SIDE
J/B ECU
R–L
R–W
Y–V
Y–O
W–B
AIRBAG
MPX–
P 3 A
PASSENGER SIDE
J/B ECU
C 6
CENTER CLUSTER
INTEGRATION PANEL
MPX+
BG1
B 5
BUCKLE SW
FRONT RH
E 3
ENGINE AND
ECT ECU
A14
A/C CONTROL
ASSEMBLY
IC3
C18
CURTAIN SHIELD
AIRBAG SQUIB LH
C19
CURTAIN SHIELD
AIRBAG SQUIB RH
IR
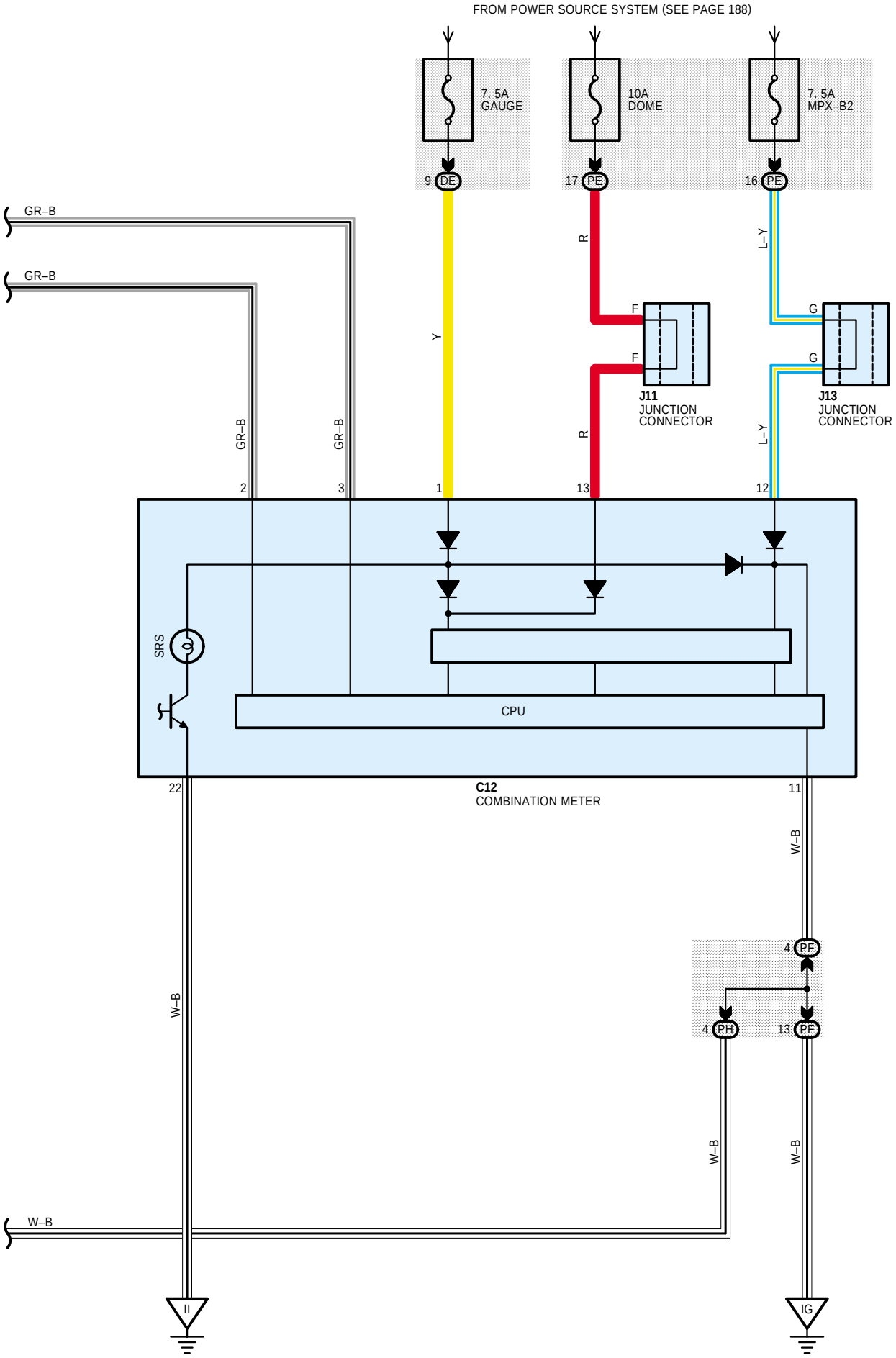
* 1 : W/ LEXUS NAVIGATION SYSTEM
* 2 : W/O LEXUS NAVIGATION SYSTEM