STARTING AND IGNITION (RHD)

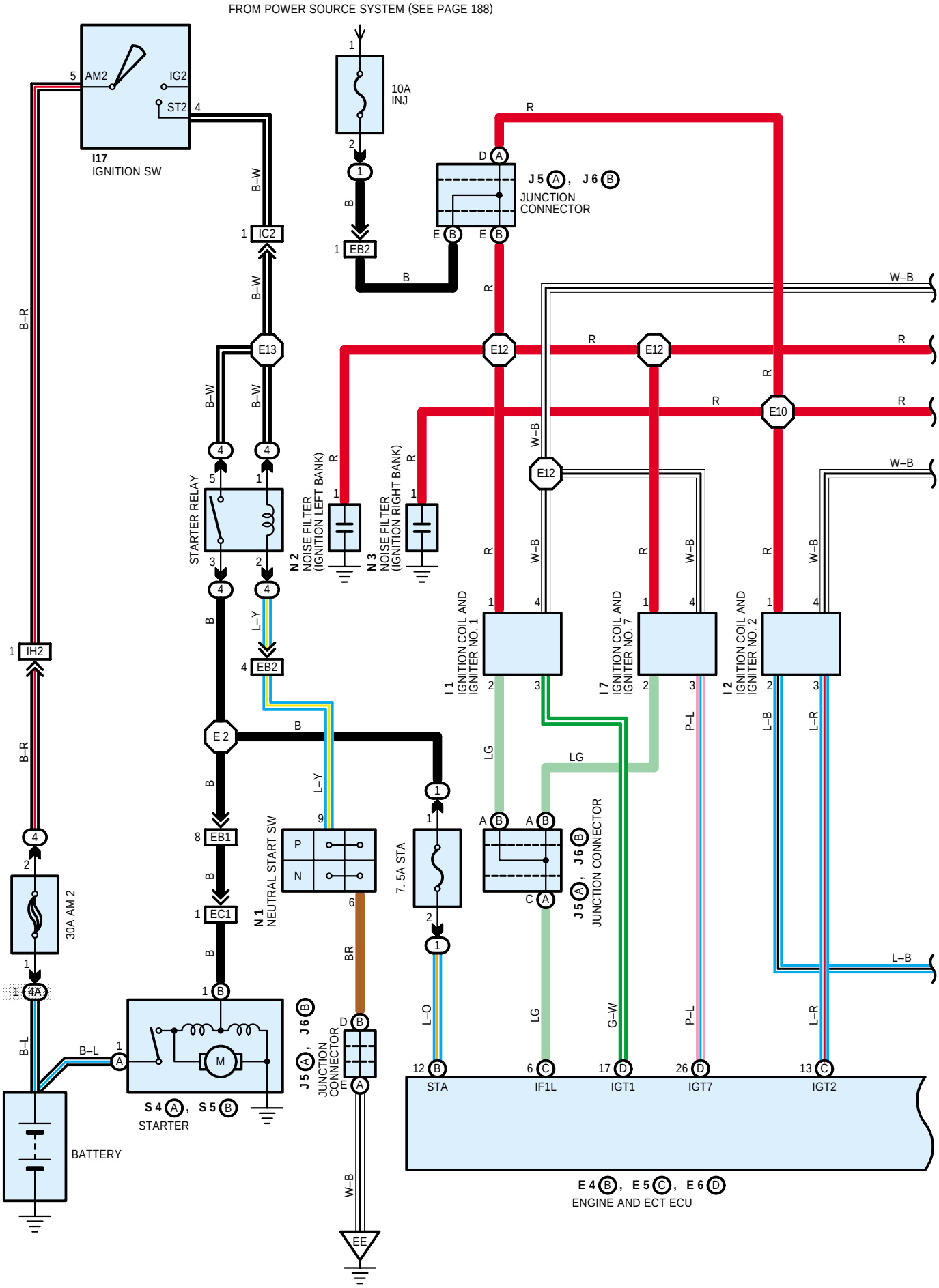

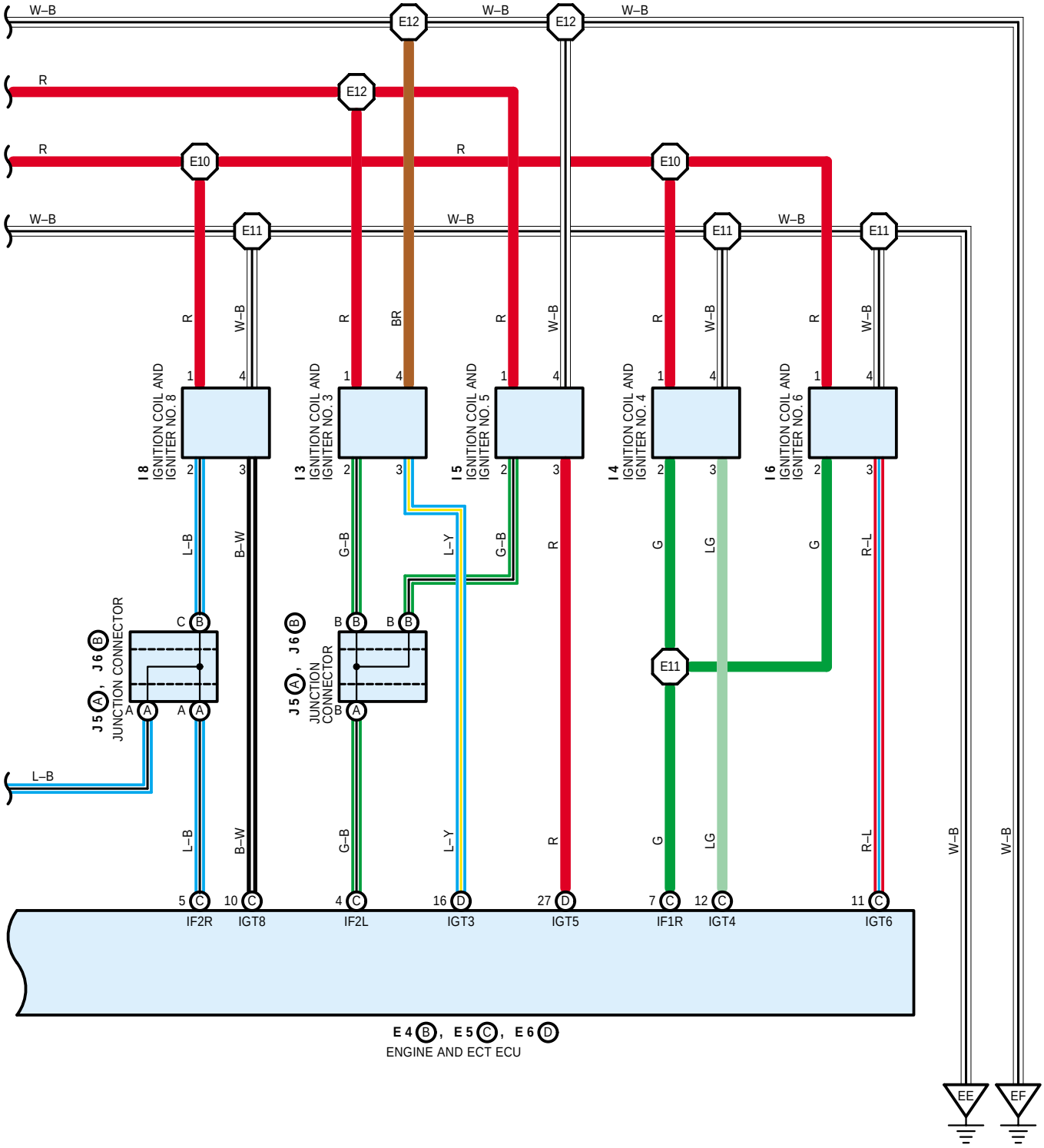
W–B
E12
W–B
E12
W–B
R
E12
R
E10
R
E10
W–B
E11
W–B
E11
W–B
E11
I 8
IGNITION COIL AND IGNITER NO. 8
I 3
IGNITION COIL AND IGNITER NO. 3
I 5
IGNITION COIL AND IGNITER NO. 5
I 4
IGNITION COIL AND IGNITER NO. 4
I 6
IGNITION COIL AND IGNITER NO. 6
J 5 A, J 6 B
JUNCTION CONNECTOR
J 5 A, J 6 B
JUNCTION CONNECTOR
E11
L–B
B–W
G–B
L–Y
G–B
R
G
LG
G
R–L
W–B
W–B
IF2R
IGT8
IF2L
IGT3
IGT5
IF1R
IGT4
IGT6
E4 B, E5 C, E6 D
ENGINE AND ECT ECU
EE
EF