REAR FOG LIGHT (RHD)

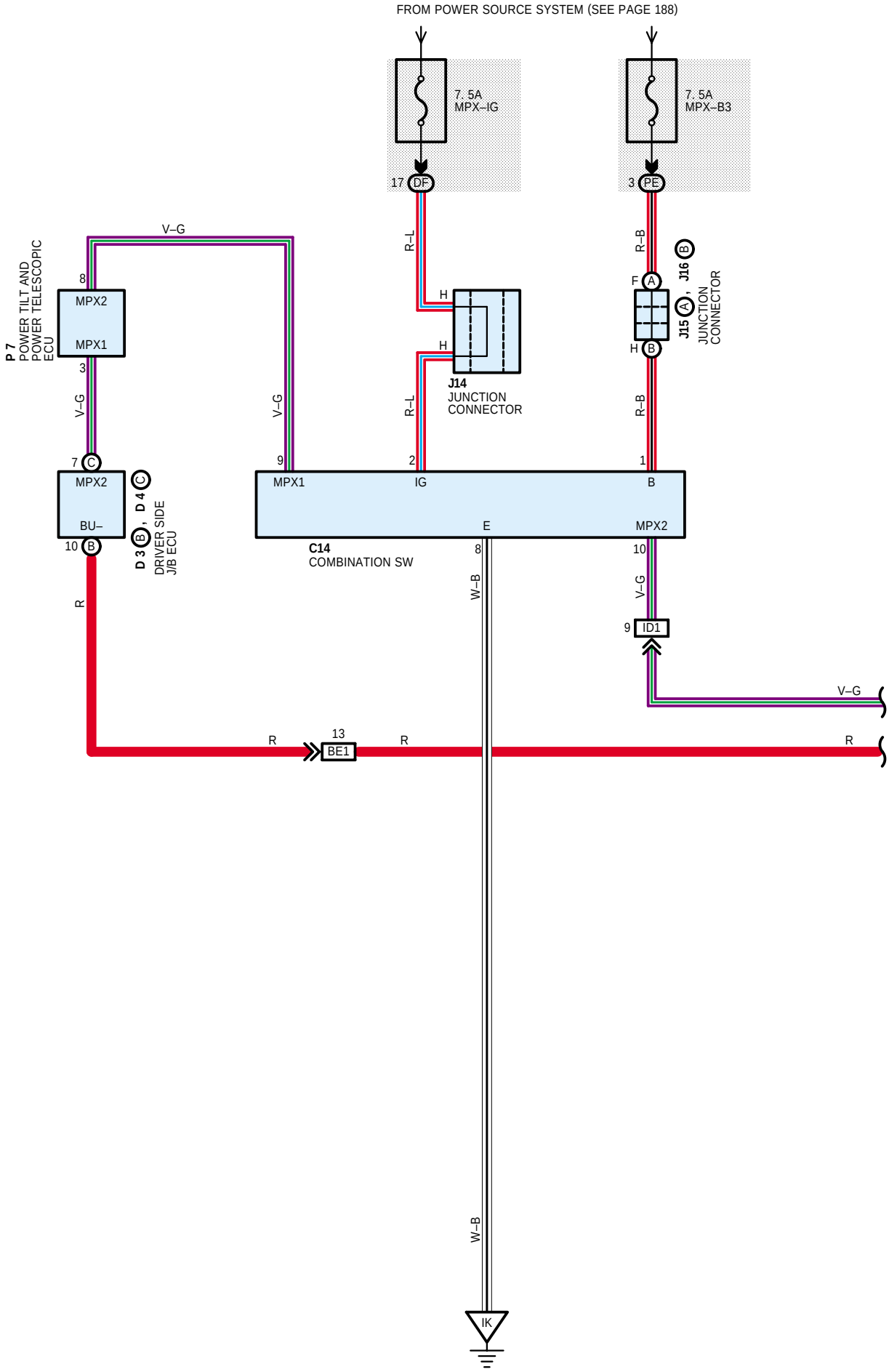

FROM POWER SOURCE SYSTEM (SEE PAGE 188)

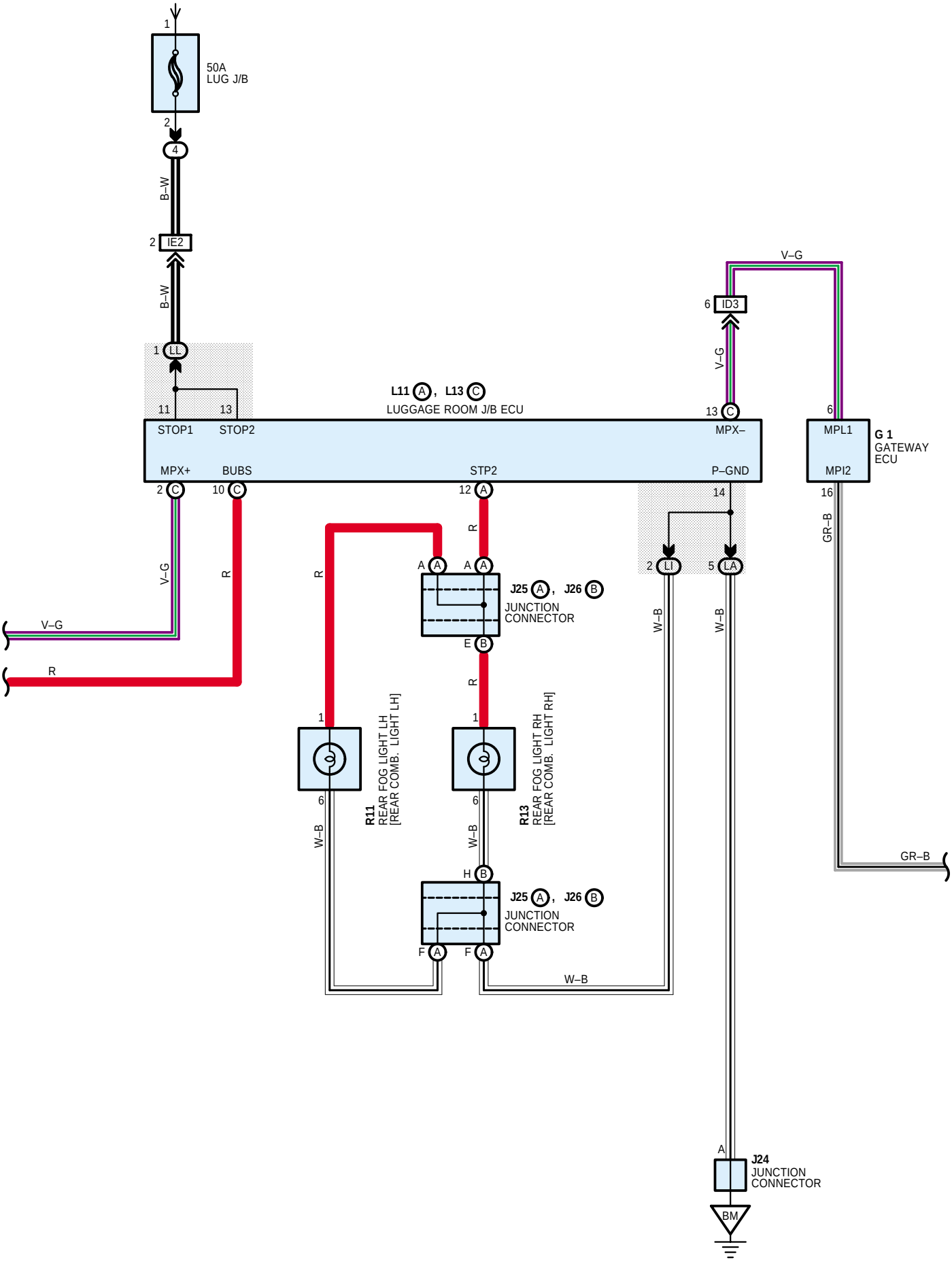
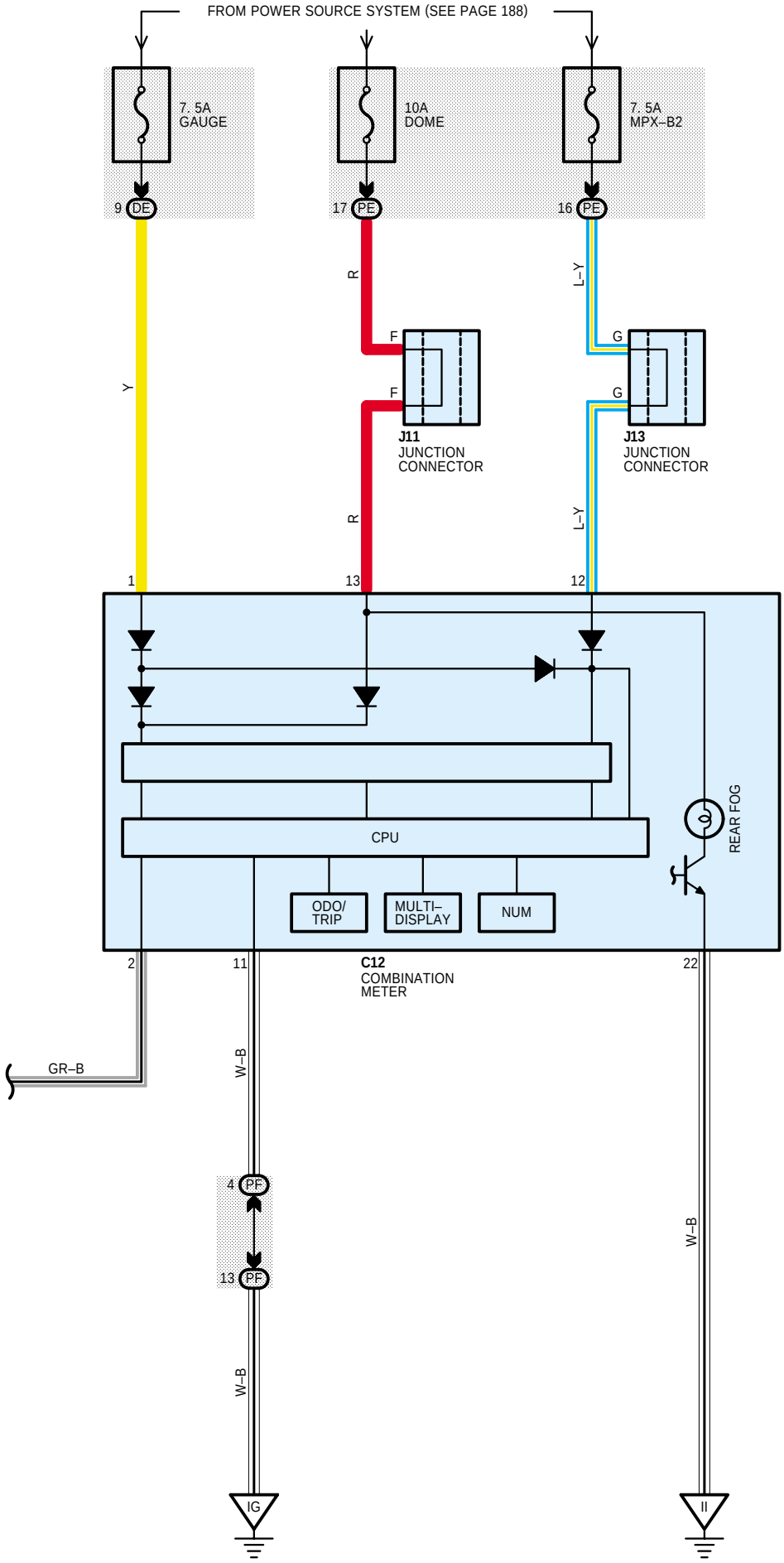
REAR FOG LIGHT (RHD)