REMOTE CONTROL MIRROR (RHD)

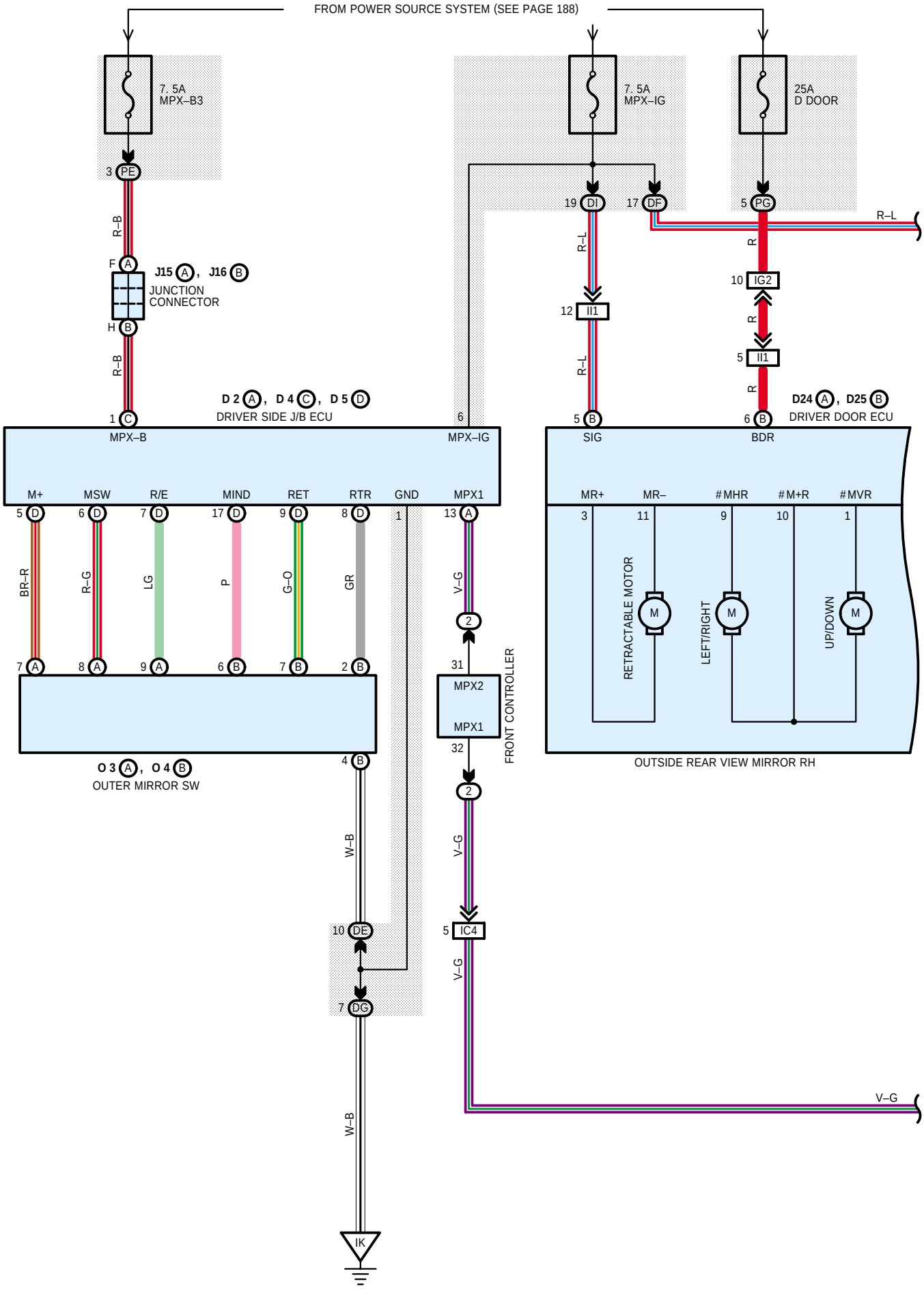

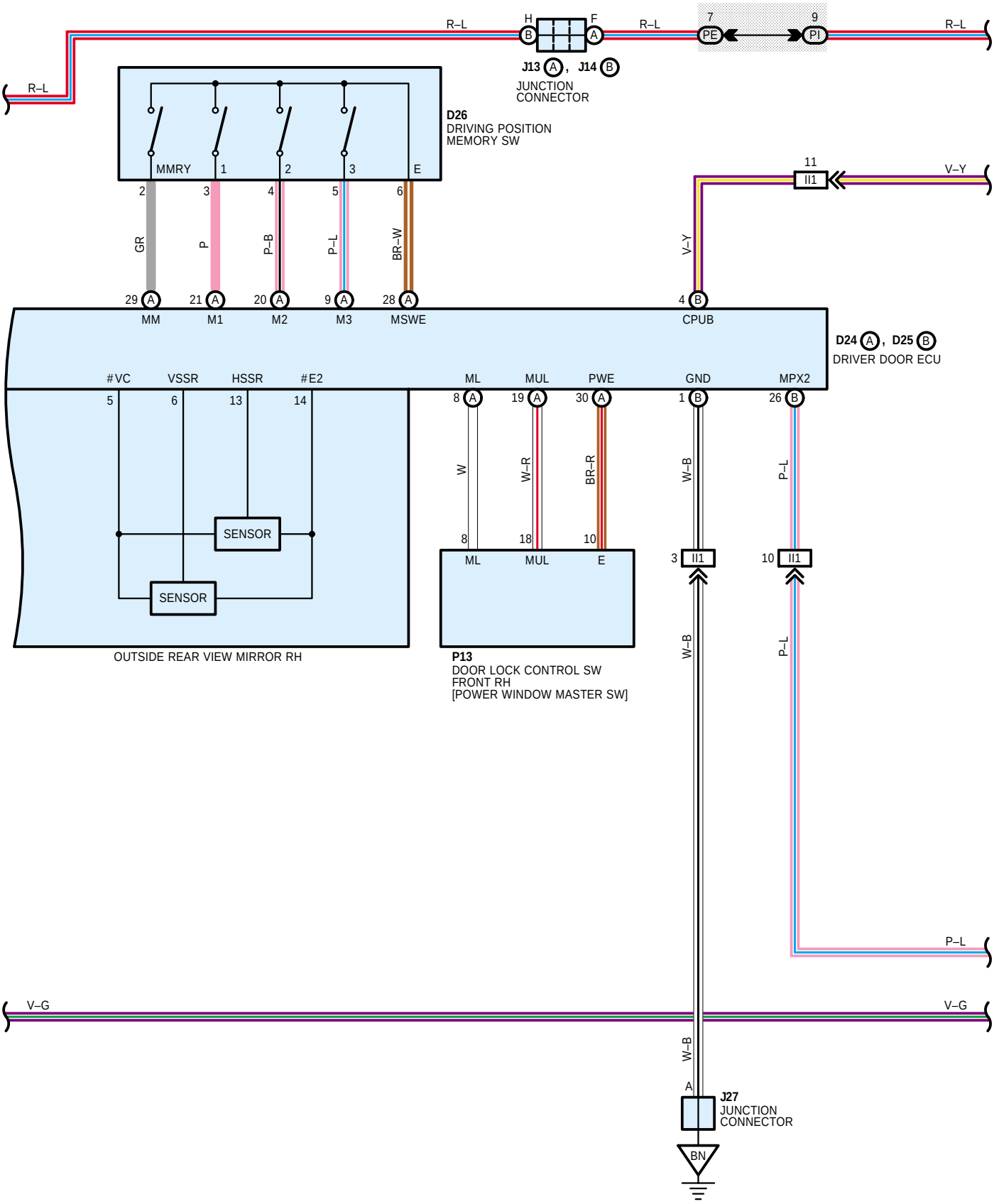
R–L
H
F
B
A
R–L
7
9
PE
PI
R–L
J13 A , J14 B
JUNCTION
CONNECTOR
R–L
D26
DRIVING POSITION
MEMORY SW
MMRY
1
2
3
E
2
3
4
5
6
GR
P
P–B
P–L
BR–W
29 A
21 A
20 A
9 A
28 A
MM
M1
M2
M3
MSWE
11
II1
V–Y
V–Y
4 B
CPUB
D24 A , D25 B
DRIVER DOOR ECU
#VC
VSSR
HSSR
#E2
5
6
13
14
SENSOR
SENSOR
OUTSIDE REAR VIEW MIRROR RH
ML
MUL
PWE
GND
MPX2
8 A
19 A
30 A
1 B
26 B
W
W–R
BR–R
W–B
P–L
8
18
10
ML
MUL
E
3
II1
10
II1
P13
DOOR LOCK CONTROL SW
FRONT RH
[POWER WINDOW MASTER SW]
W–B
P–L
P–L
V–G
V–G
W–B
A
J27
JUNCTION
CONNECTOR
BN

REMOTE CONTROL MIRROR (RHD)

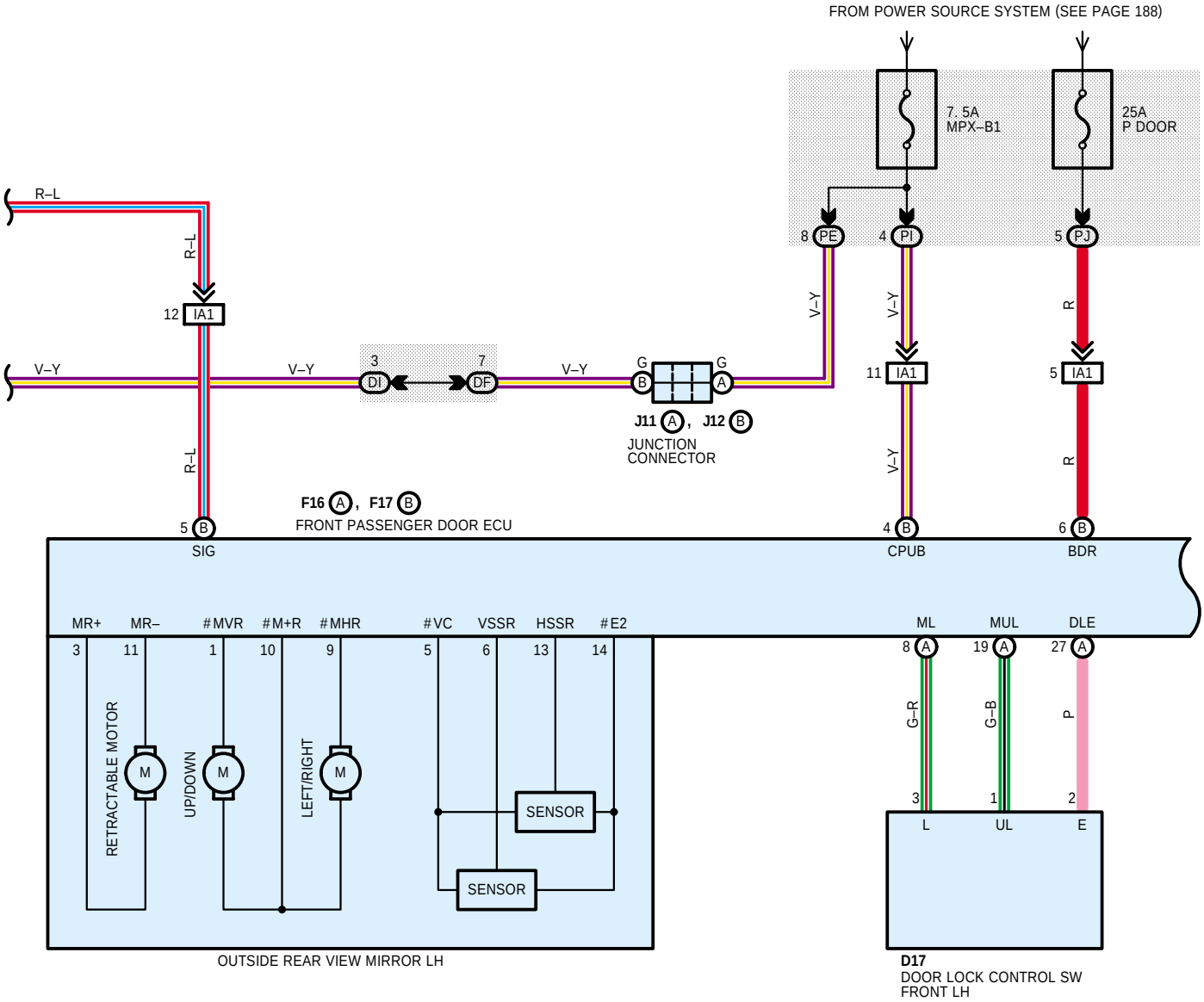

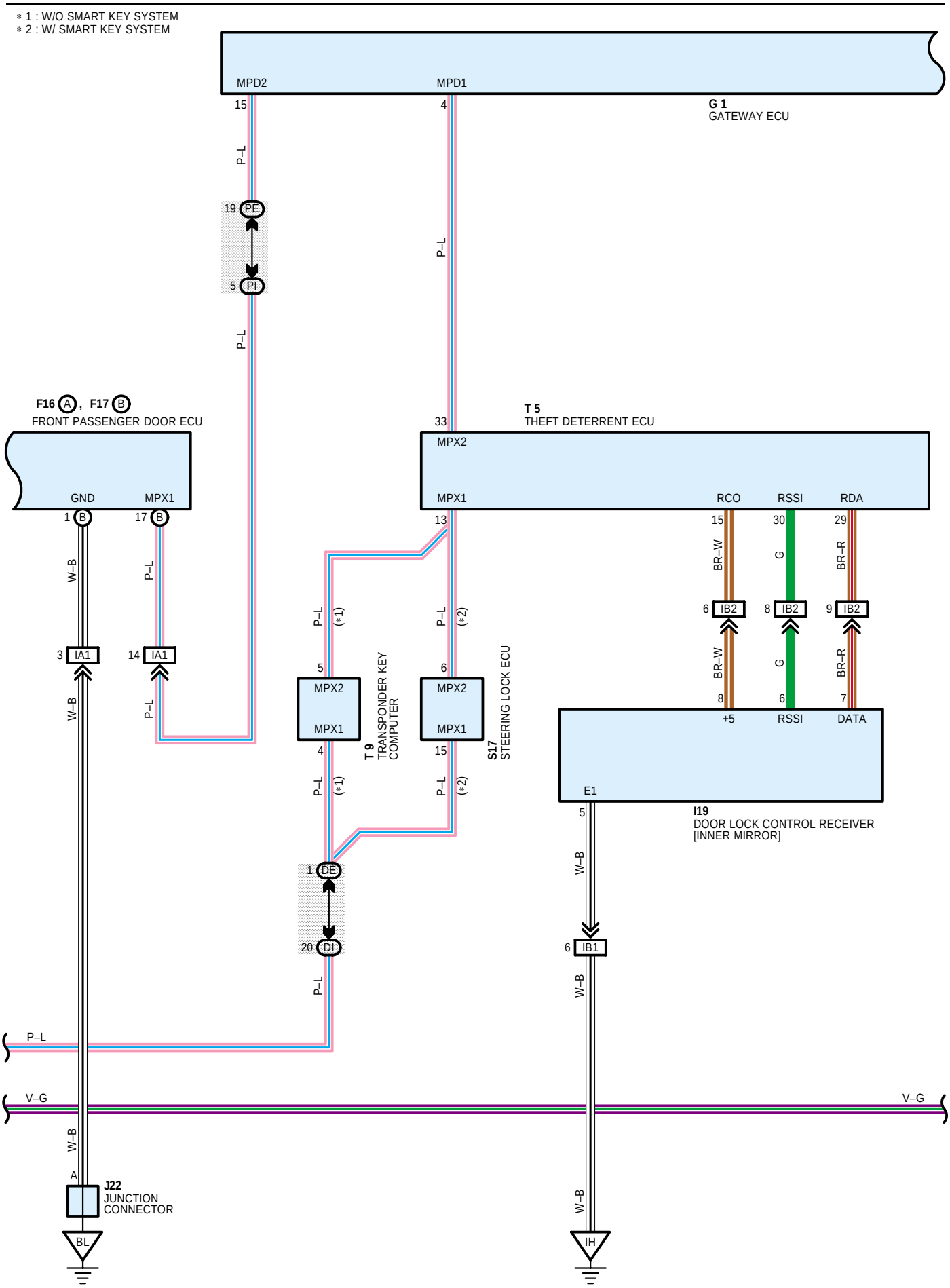
* 1 : W/O SMART KEY SYSTEM
* 2 : W/ SMART KEY SYSTEM
MPD2
MPD1
G 1
GATEWAY ECU
F16 A , F17 B
FRONT PASSENGER DOOR ECU
GND
MPX1
T 5
THEFT DETERRENT ECU
MPX2
RCO
RSSI
RDA
T 9
TRANSPONDER KEY COMPUTER
S17
STEERING LOCK ECU
I19
DOOR LOCK CONTROL RECEIVER [INNER MIRROR]
E1
+5
DATA
PE
PI
DE
DI
IA1
IB2
IB1
J22
JUNCTION CONNECTOR
BL
IH
P–L
W–B
V–G
BR–W
G
BR–R
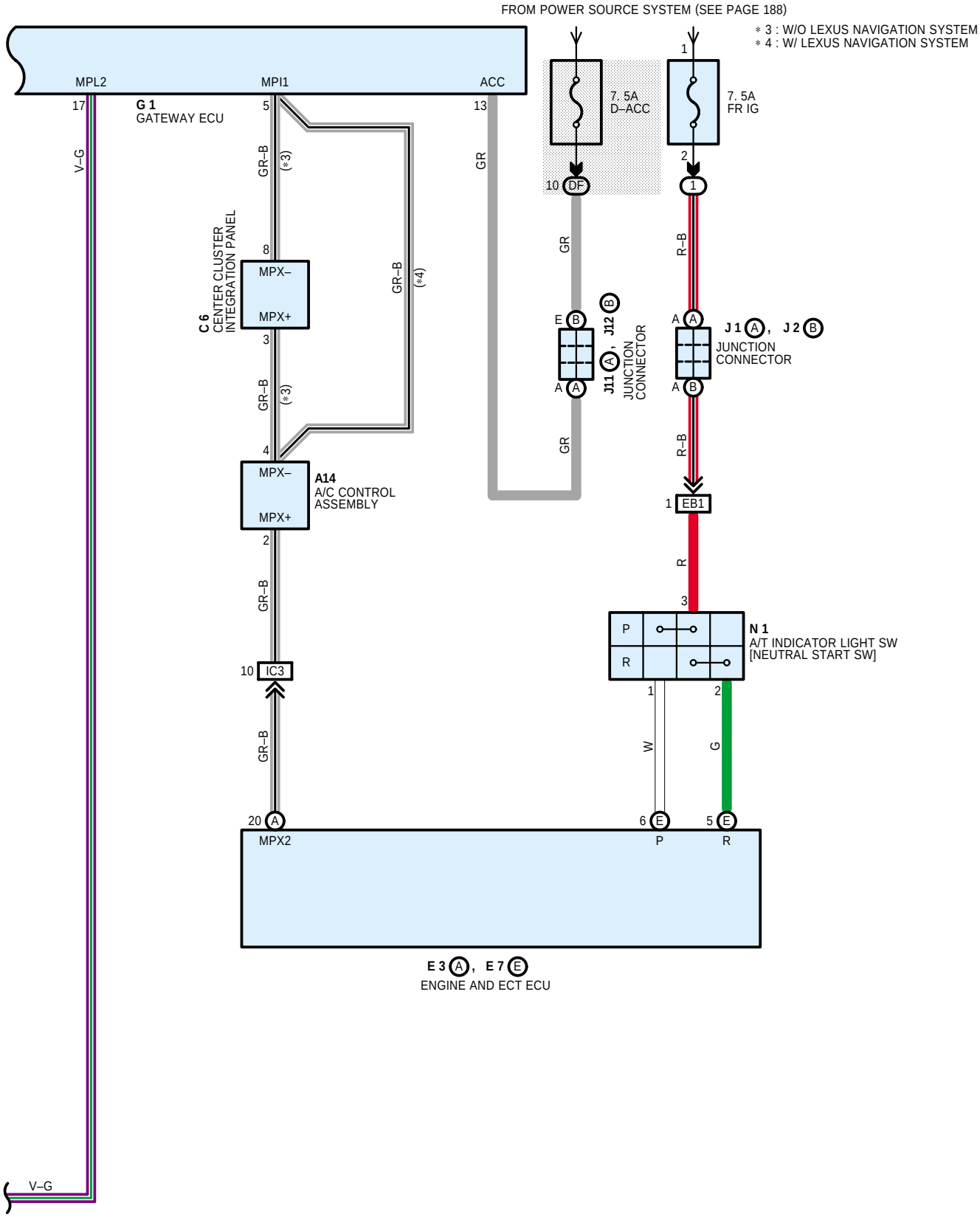
REMOTE CONTROL MIRROR (RHD)