RADIO AND PLAYER (RHD)

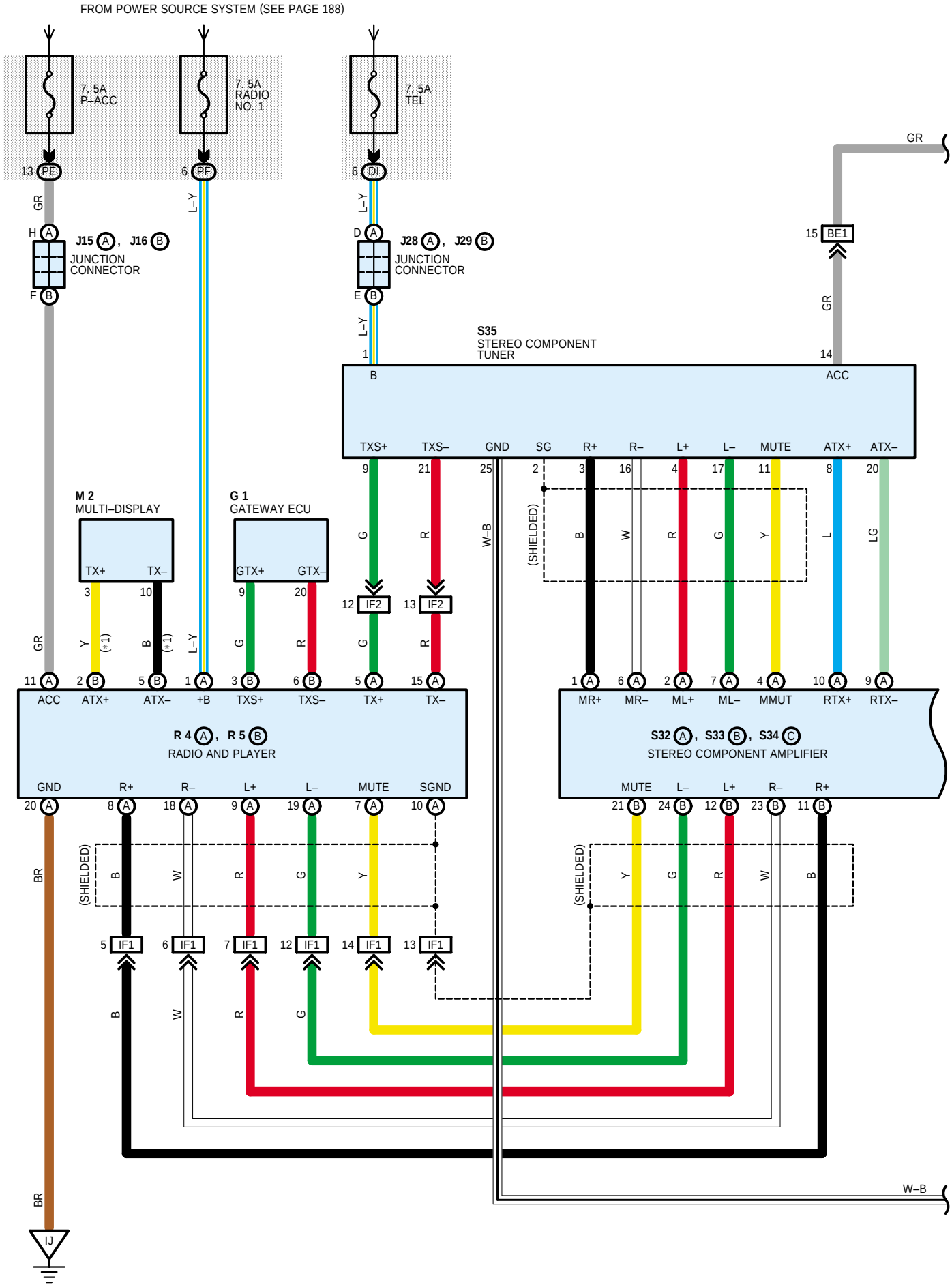

∗1 : W/ LEXUS NAVIGATION SYSTEM
∗2 : W/O LEXUS NAVIGATION SYSTEM
∗3 : 9 SPEAKER
∗4 : 7 SPEAKER
∗5 : W/O REAR POWER SEAT
∗6 : W/ REAR POWER SEAT

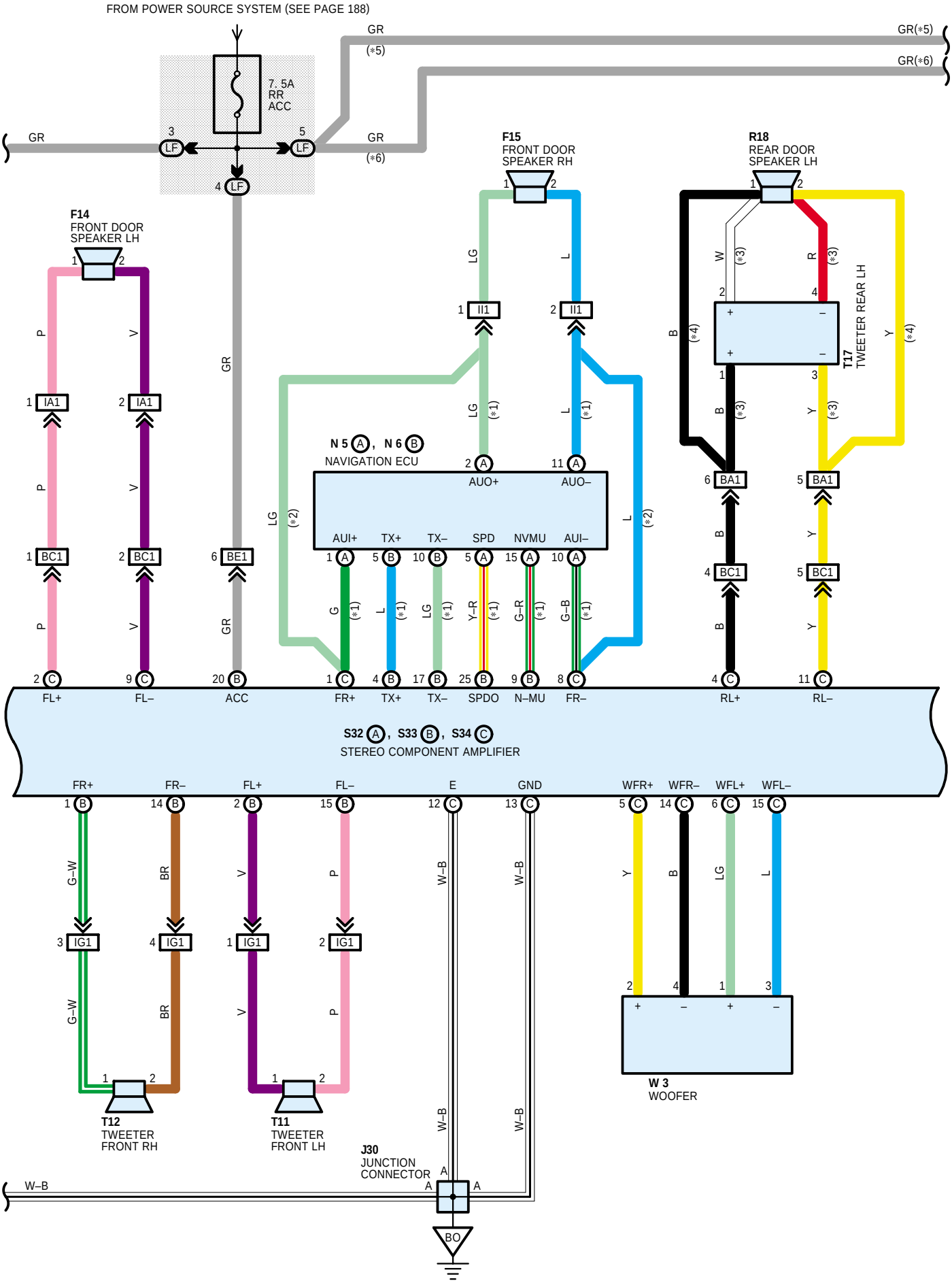

RADIO AND PLAYER (RHD)

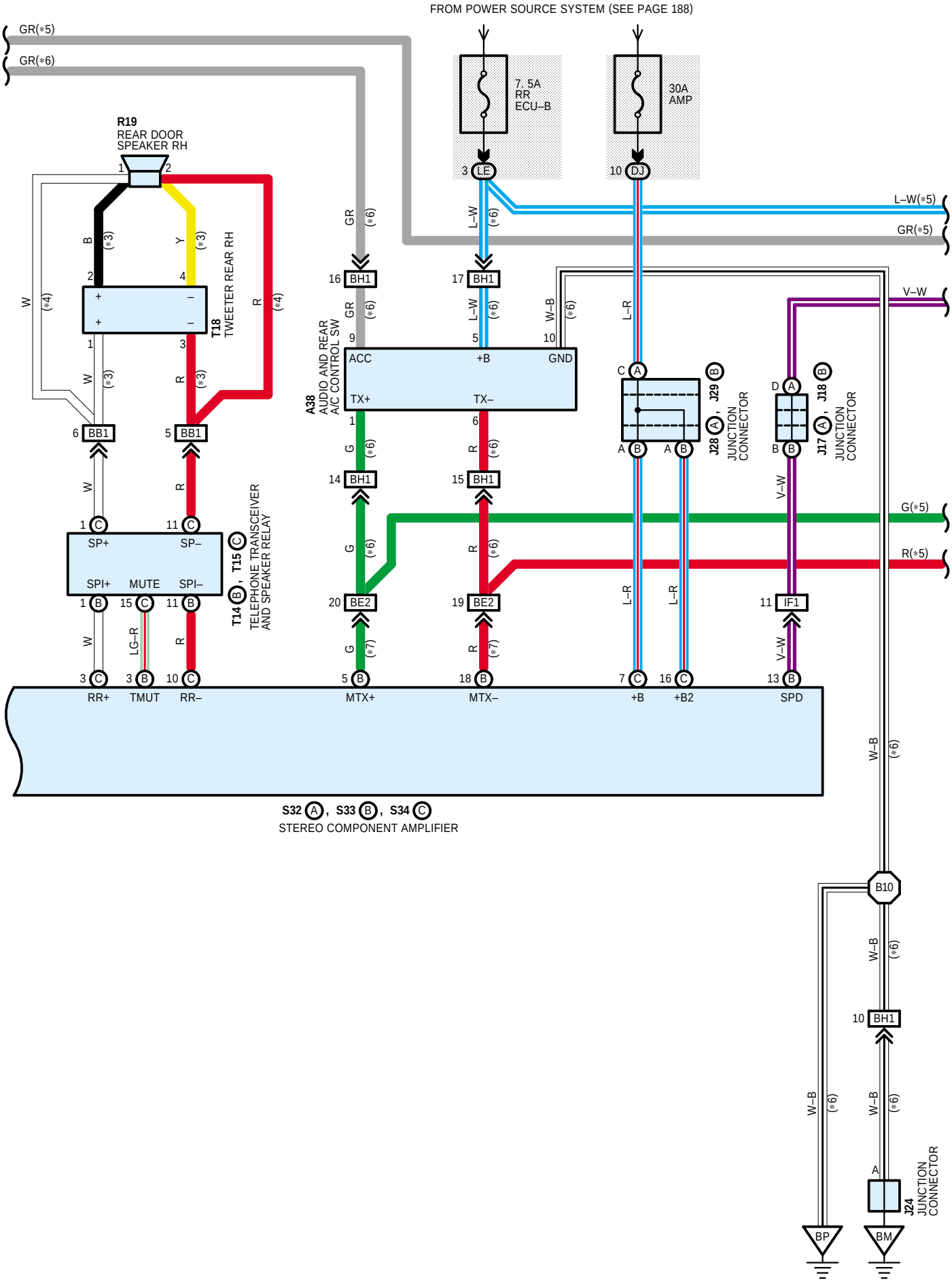

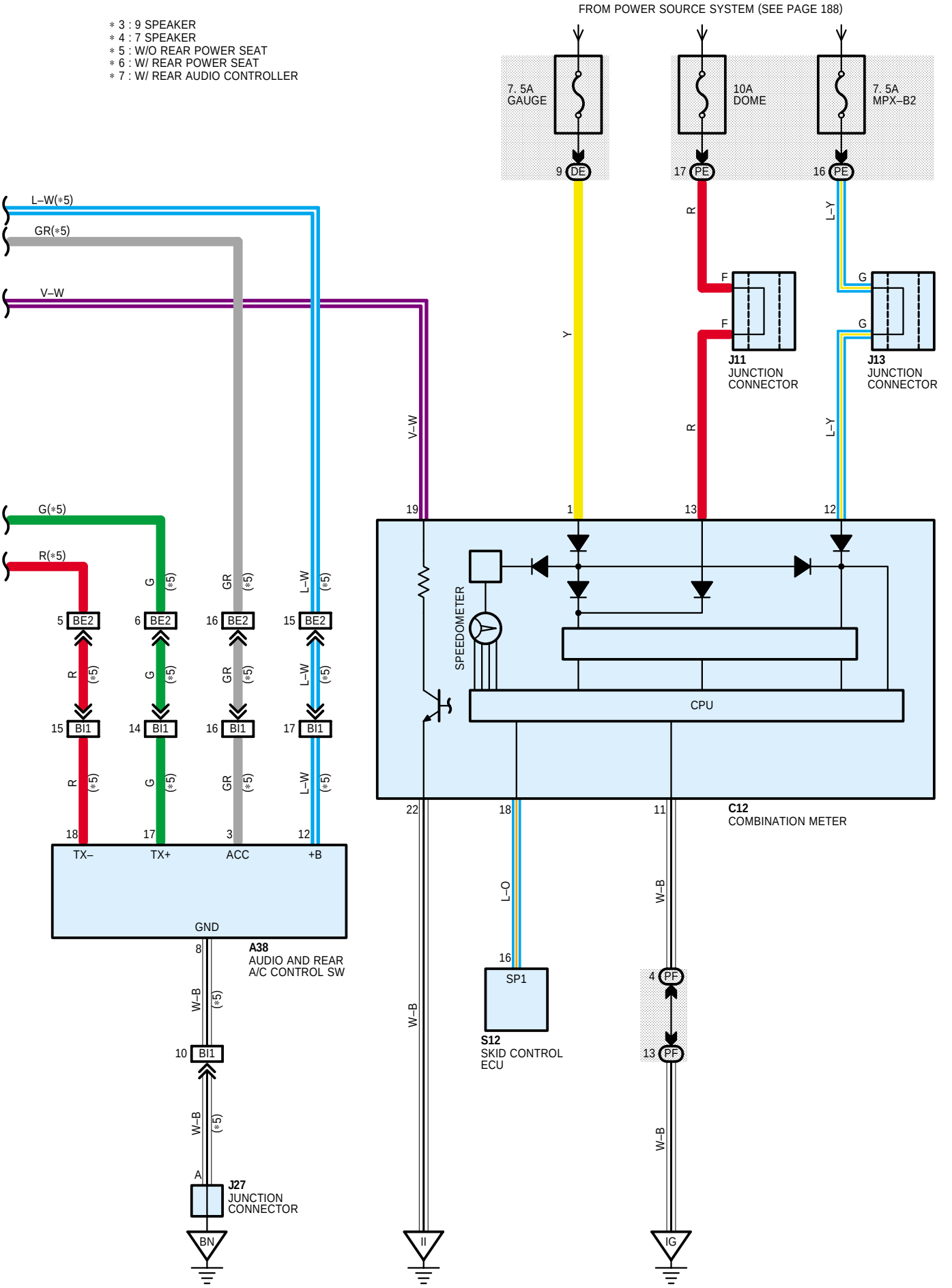
FROM POWER SOURCE SYSTEM (SEE PAGE 188)
* 3 : 9 SPEAKER
* 4 : 7 SPEAKER
* 5 : W/O REAR POWER SEAT
* 6 : W/ REAR POWER SEAT
* 7 : W/ REAR AUDIO CONTROLLER
7. 5A GAUGE
10A DOME
7. 5A MPX–B2
9 DE
17 PE
16 PE
L–W(*5)
GR(*5)
V–W
G(*5)
R(*5)
J11 JUNCTION CONNECTOR
J13 JUNCTION CONNECTOR
SPEEDOMETER
CPU
C12 COMBINATION METER
A38 AUDIO AND REAR A/C CONTROL SW
TX–
TX+
ACC
+B
GND
SP1
S12 SKID CONTROL ECU
J27 JUNCTION CONNECTOR
BN
II
IG