POWER WINDOW (LHD)

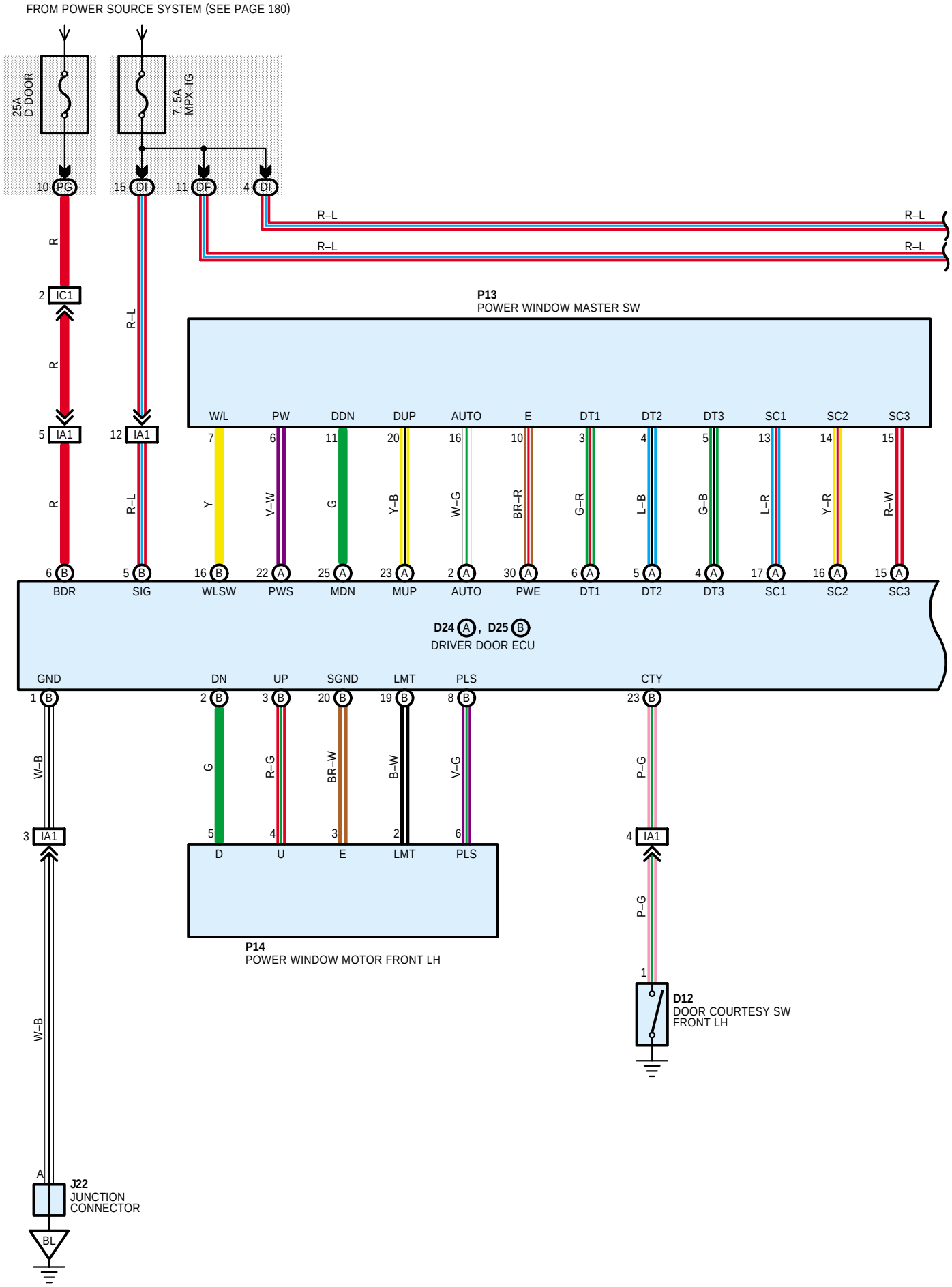

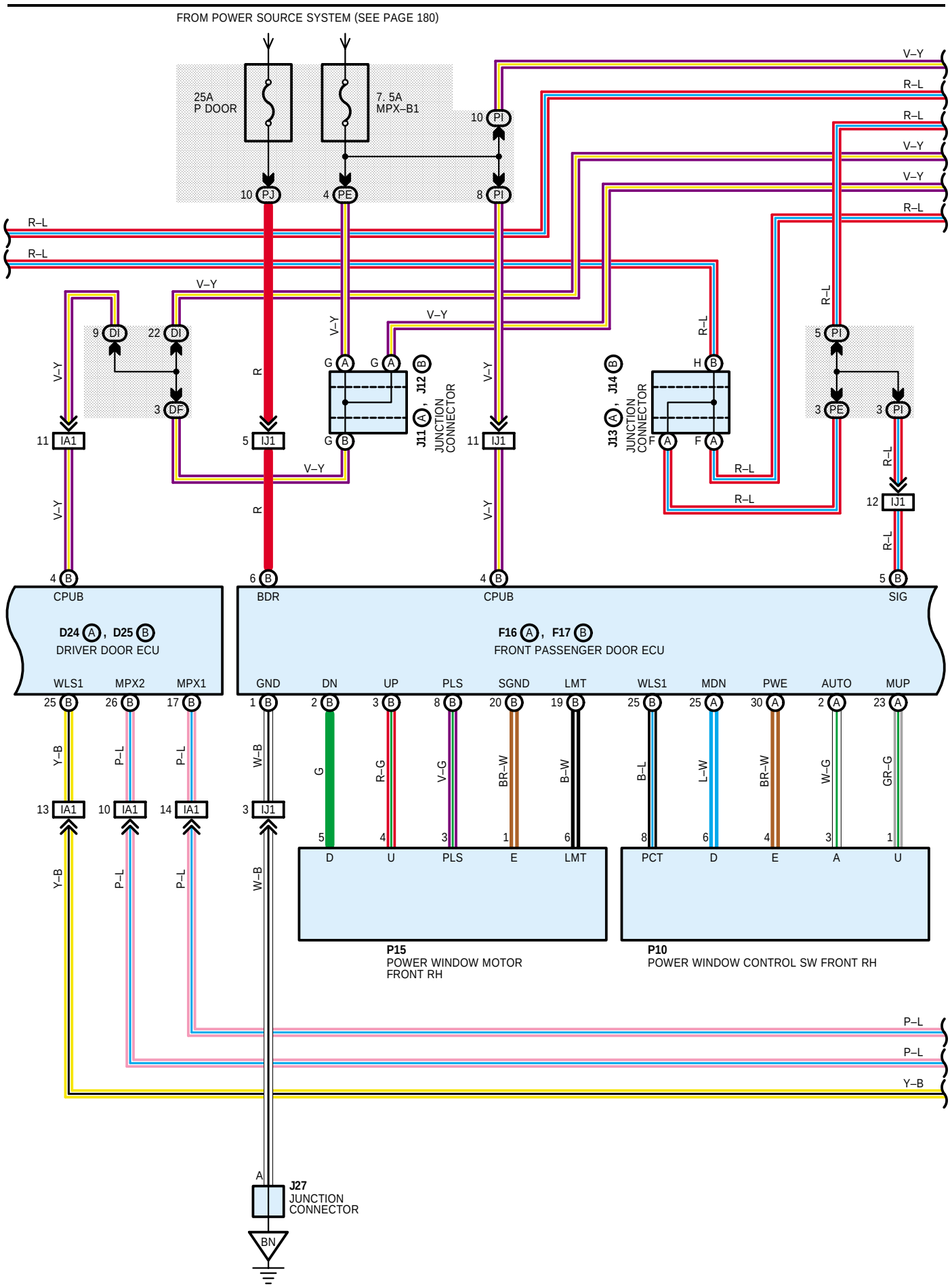
FROM POWER SOURCE SYSTEM (SEE PAGE 180)
25A
P DOOR
7. 5A
MPX–B1
10 PJ
4 PE
8 PI
10 PI
V–Y
R–L
R–L
V–Y
V–Y
R–L
R–L
R–L
V–Y
9 DI
22 DI
3 DF
11 IA1
5 IJ1
11 IJ1
12 IJ1
5 PI
3 PE
3 PI
G A
G A
G B
J11 A , J12 B
JUNCTION
CONNECTOR
H B
F A
F A
J13 A , J14 B
JUNCTION
CONNECTOR
4 B
CPUB
6 B
BDR
4 B
CPUB
5 B
SIG
D24 A , D25 B
DRIVER DOOR ECU
F16 A , F17 B
FRONT PASSENGER DOOR ECU
WLS1
MPX2
MPX1
GND
DN
UP
PLS
SGND
LMT
WLS1
MDN
PWE
AUTO
MUP
25 B
26 B
17 B
1 B
2 B
3 B
8 B
20 B
19 B
25 B
25 A
30 A
2 A
23 A
Y–B
P–L
P–L
W–B
G
R–G
V–G
BR–W
B–W
B–L
L–W
BR–W
W–G
GR–G
13 IA1
10 IA1
14 IA1
3 IJ1
5
4
3
1
6
8
6
4
3
1
D
U
PLS
E
LMT
PCT
D
E
A
U
P15
POWER WINDOW MOTOR
FRONT RH
P10
POWER WINDOW CONTROL SW FRONT RH
P–L
P–L
Y–B
A
J27
JUNCTION
CONNECTOR
BN

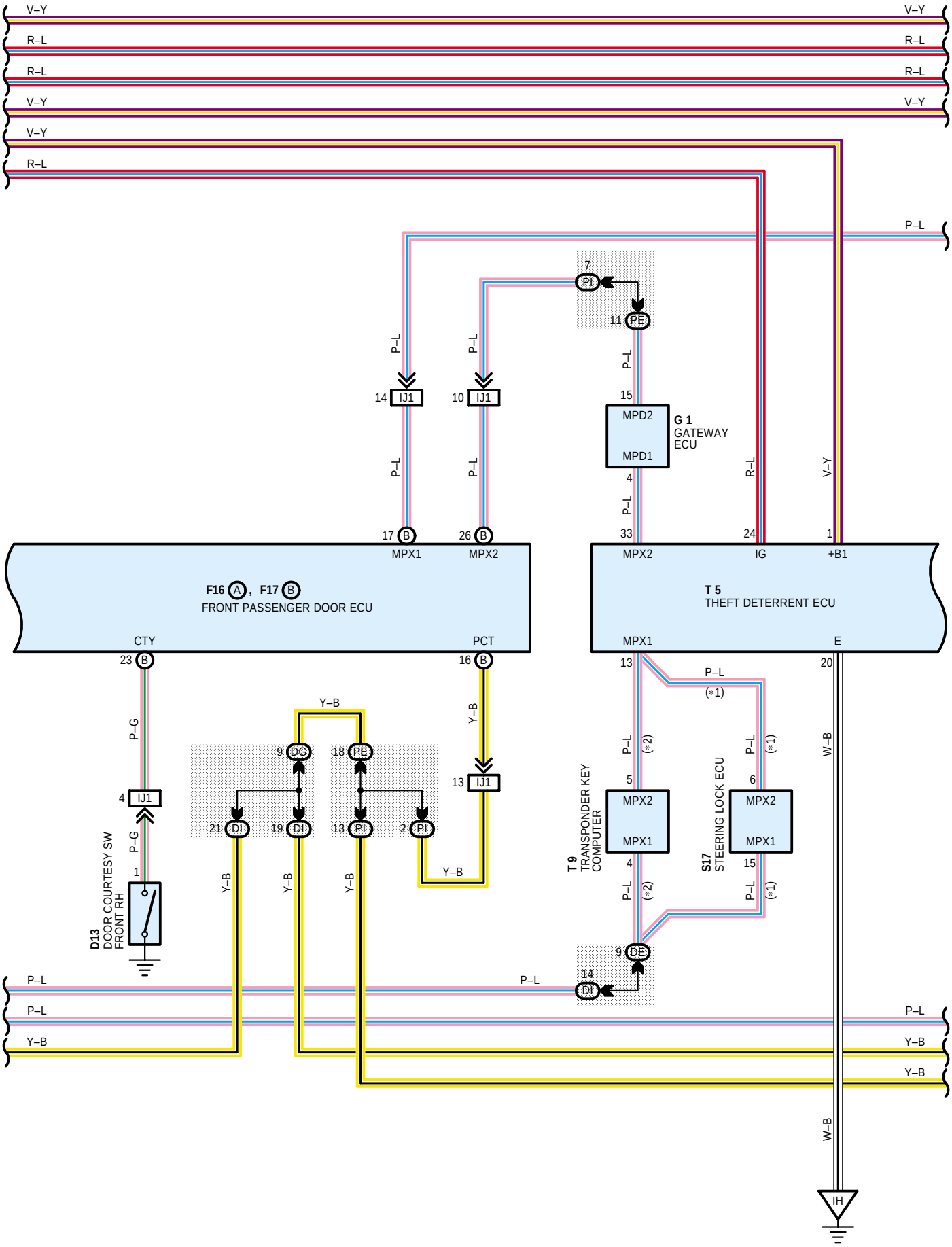
V–Y
R–L
P–L
Y–B
W–B
P–G
7
PI
11
PE
14
IJ1
10
IJ1
15
MPD2
MPD1
G 1
GATEWAY
ECU
4
33
24
1
17
B
26
B
MPX1
MPX2
IG
+B1
F16 A , F17 B
FRONT PASSENGER DOOR ECU
T 5
THEFT DETERRENT ECU
CTY
PCT
E
23
16
13
20
(*1)
(*2)
9
DG
18
PE
21
DI
19
DI
13
PI
2
PI
5
6
15
MPX2
MPX1
T 9
TRANSPONDER KEY
COMPUTER
S17
STEERING LOCK ECU
D13
DOOR COURTESY SW
FRONT RH
1
9
DE
14
DI
IH

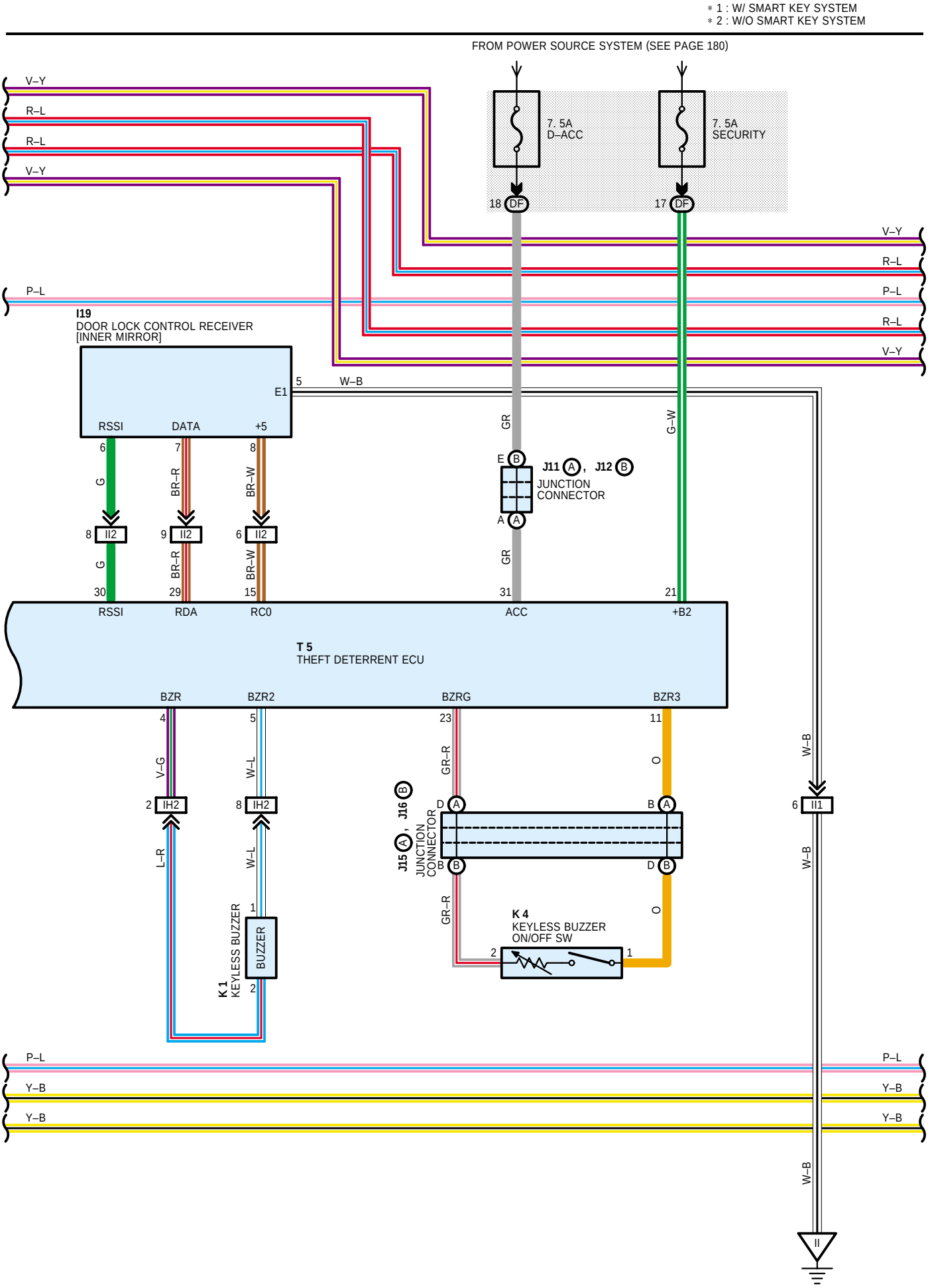

* 1 : W/ SMART KEY SYSTEM
* 2 : W/O SMART KEY SYSTEM
FROM POWER SOURCE SYSTEM (SEE PAGE 180)
7. 5A
D–ACC
7. 5A
SECURITY
18 DF
17 DF
V–Y
R–L
R–L
V–Y
P–L
I19
DOOR LOCK CONTROL RECEIVER
[INNER MIRROR]
E1
5
W–B
RSSI
DATA
+5
6
7
8
G
BR–R
BR–W
8 II2
9 II2
6 II2
30
29
15
GR
G–W
E B
J11 A , J12 B
JUNCTION
CONNECTOR
A A
31
21
RSSI
RDA
RC0
ACC
+B2
T 5
THEFT DETERRENT ECU
BZR
BZR2
BZRG
BZR3
4
5
23
11
V–G
W–L
GR–R
O
2 IH2
8 IH2
L–R
W–L
J15 A , J16 B
JUNCTION
CONNECTOR
D A
B A
B B
D B
6 II1
W–B
K 1
KEYLESS BUZZER
BUZZER
1
2
K 4
KEYLESS BUZZER
ON/OFF SW
2
1
P–L
Y–B
Y–B
W–B
II

POWER WINDOW (LHD)

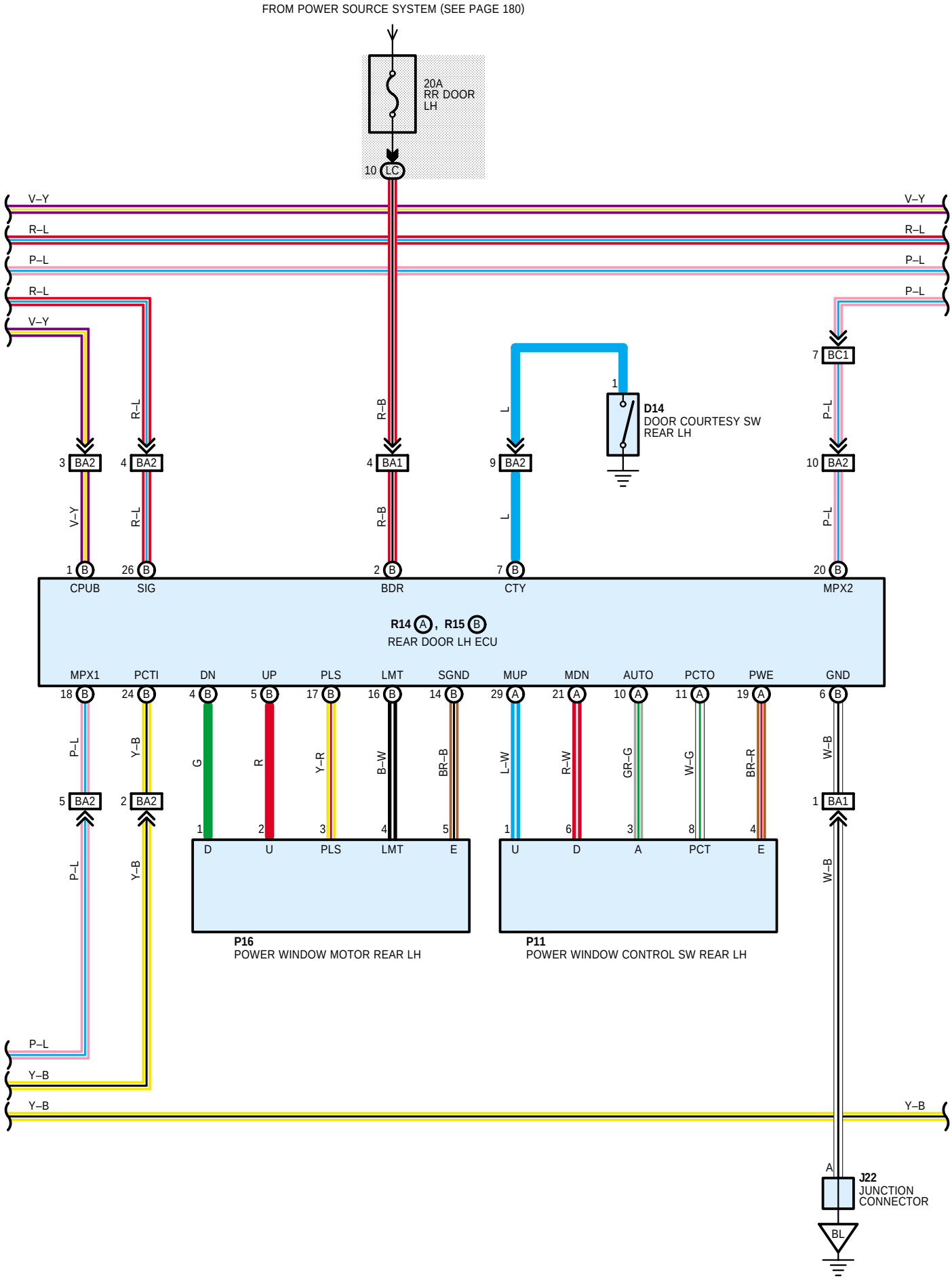

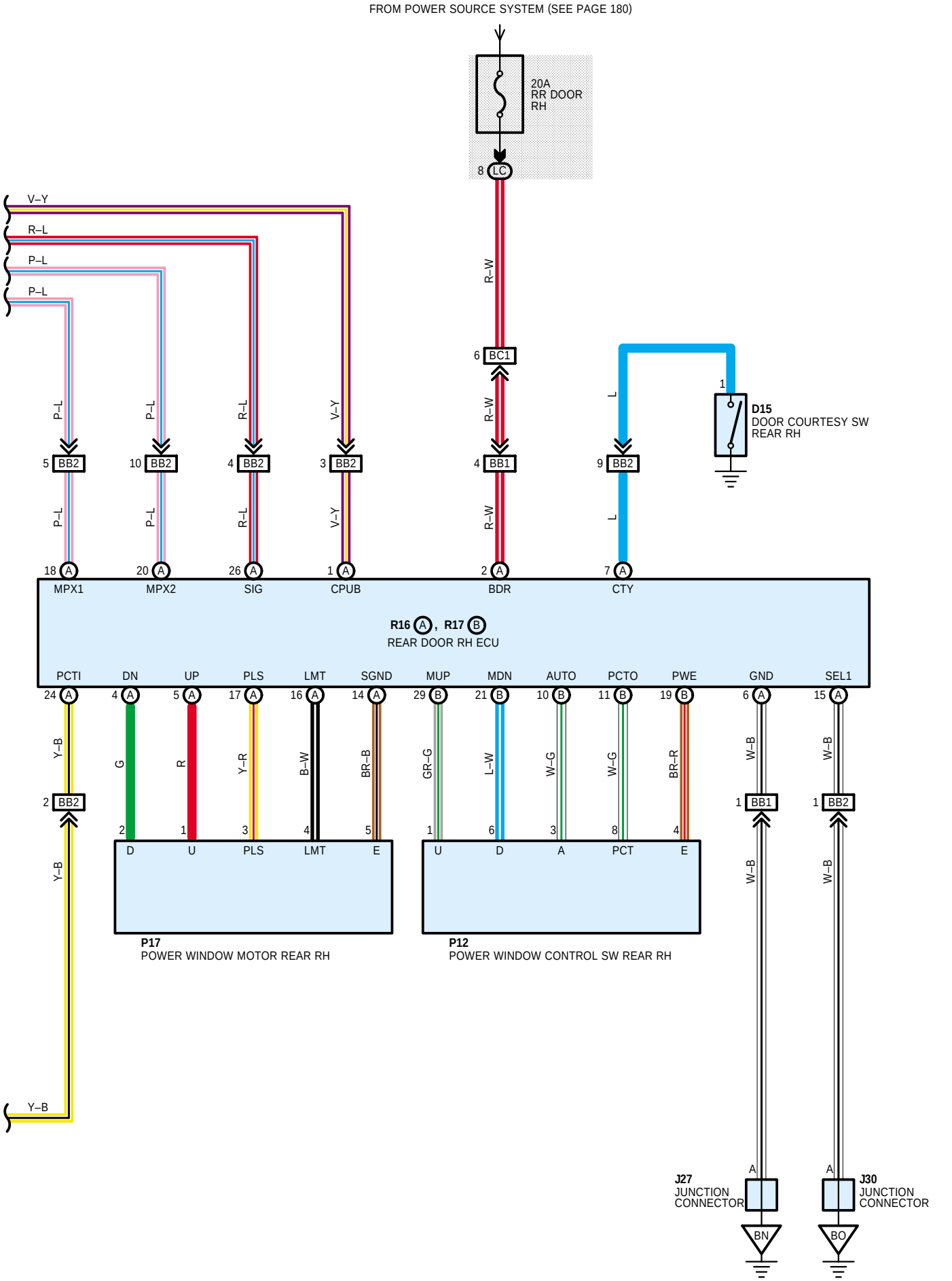
FROM POWER SOURCE SYSTEM (SEE PAGE 180)
20A
RR DOOR
RH
8 LC
V–Y
R–L
P–L
P–L
R–W
6 BC1
R–W
4 BB1
R–W
L
1
D15
DOOR COURTESY SW
REAR RH
9 BB2
L
P–L
5 BB2
P–L
P–L
10 BB2
P–L
R–L
4 BB2
R–L
V–Y
3 BB2
V–Y
18 A
MPX1
20 A
MPX2
26 A
SIG
1 A
CPUB
2 A
BDR
7 A
CTY
R16 A, R17 B
REAR DOOR RH ECU
PCTI
DN
UP
PLS
LMT
SGND
MUP
MDN
AUTO
PCTO
PWE
GND
SEL1
24 A
4 A
5 A
17 A
16 A
14 A
29 B
21 B
10 B
11 B
19 B
6 A
15 A
Y–B
G
R
Y–R
B–W
BR–B
GR–G
L–W
W–G
W–G
BR–R
W–B
W–B
2 BB2
Y–B
2
1
3
4
5
1
6
3
8
4
1 BB1
1 BB2
W–B
W–B
D
U
PLS
LMT
E
U
D
A
PCT
E
P17
POWER WINDOW MOTOR REAR RH
P12
POWER WINDOW CONTROL SW REAR RH
Y–B
A
A
J27
JUNCTION
CONNECTOR
J30
JUNCTION
CONNECTOR
BN
BO