POWER TILT AND POWER TELESCOPIC (RHD)

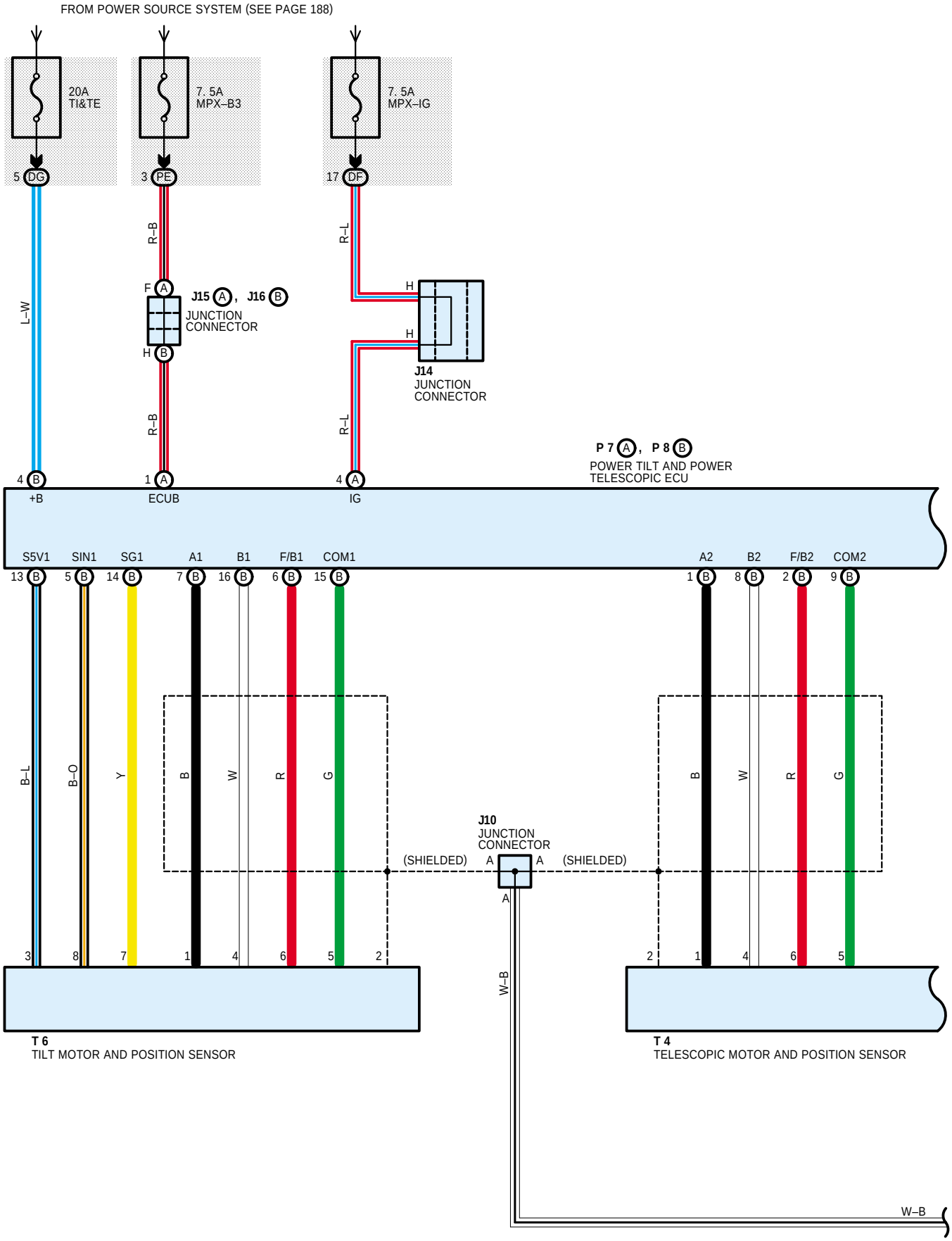

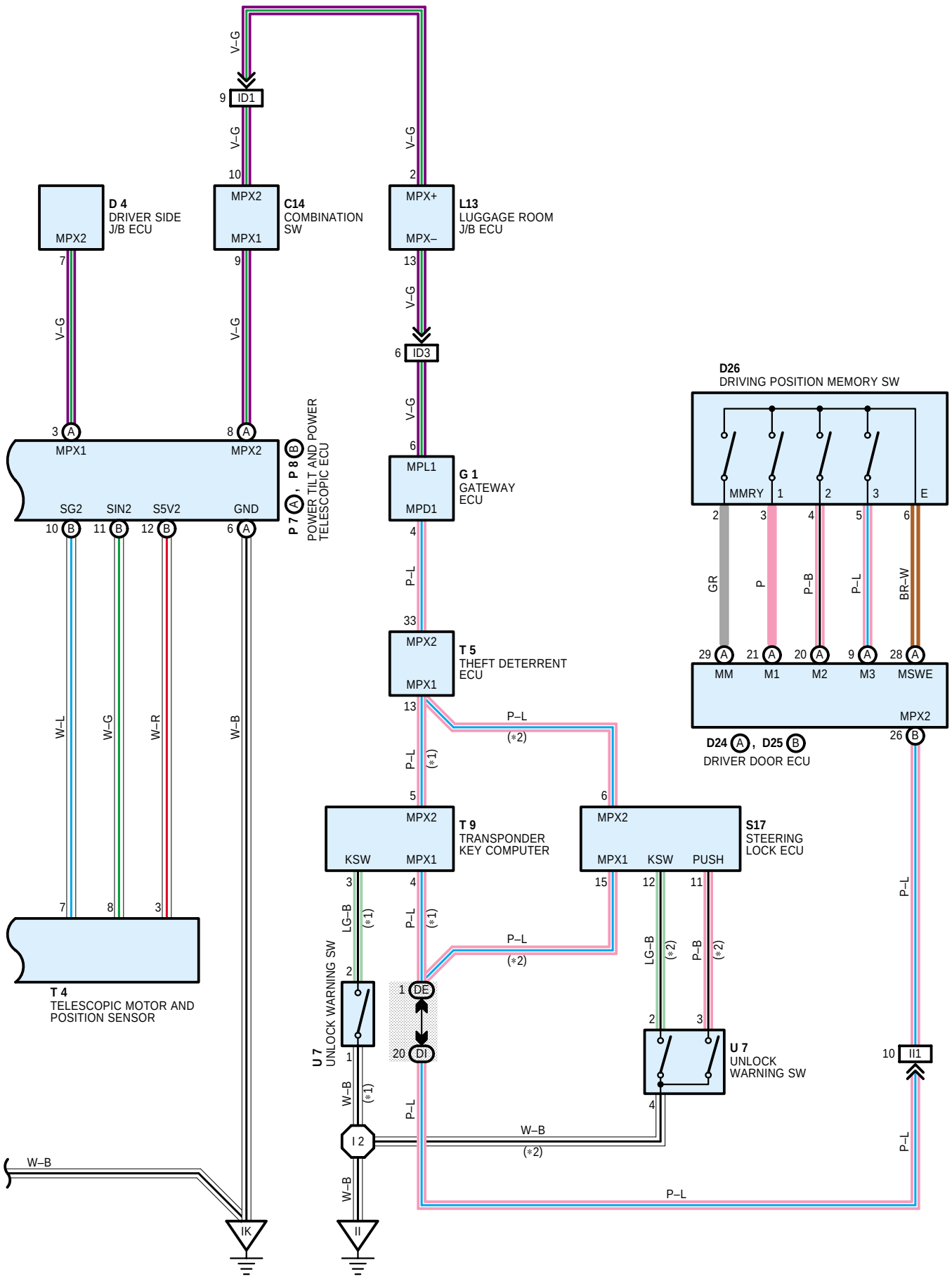
D 4
DRIVER SIDE
J/B ECU
MPX2
C14
COMBINATION
SW
MPX2
MPX1
L13
LUGGAGE ROOM
J/B ECU
MPX+
MPX–
ID1
ID3
V–G
MPX1
MPX2
SG2
SIN2
S5V2
GND
P 7 A , P 8 B
POWER TILT AND POWER
TELESCOPIC ECU
W–L
W–G
W–R
W–B
T 4
TELESCOPIC MOTOR AND
POSITION SENSOR
IK
MPL1
MPD1
G 1
GATEWAY
ECU
P–L
MPX2
MPX1
T 5
THEFT DETERRENT
ECU
(*1)
(*2)
MPX2
KSW
MPX1
T 9
TRANSPONDER
KEY COMPUTER
LG–B
U 7
UNLOCK WARNING SW
DE
DI
I 2
II
MPX2
MPX1
KSW
PUSH
S17
STEERING
LOCK ECU
P–B
U 7
UNLOCK
WARNING SW
D26
DRIVING POSITION MEMORY SW
MMRY
E
GR
BR–W
MM
M1
M2
M3
MSWE
MPX2
D24 A , D25 B
DRIVER DOOR ECU
II1