POWER SEAT (REAR PASSENGER'S SEAT) [RHD]

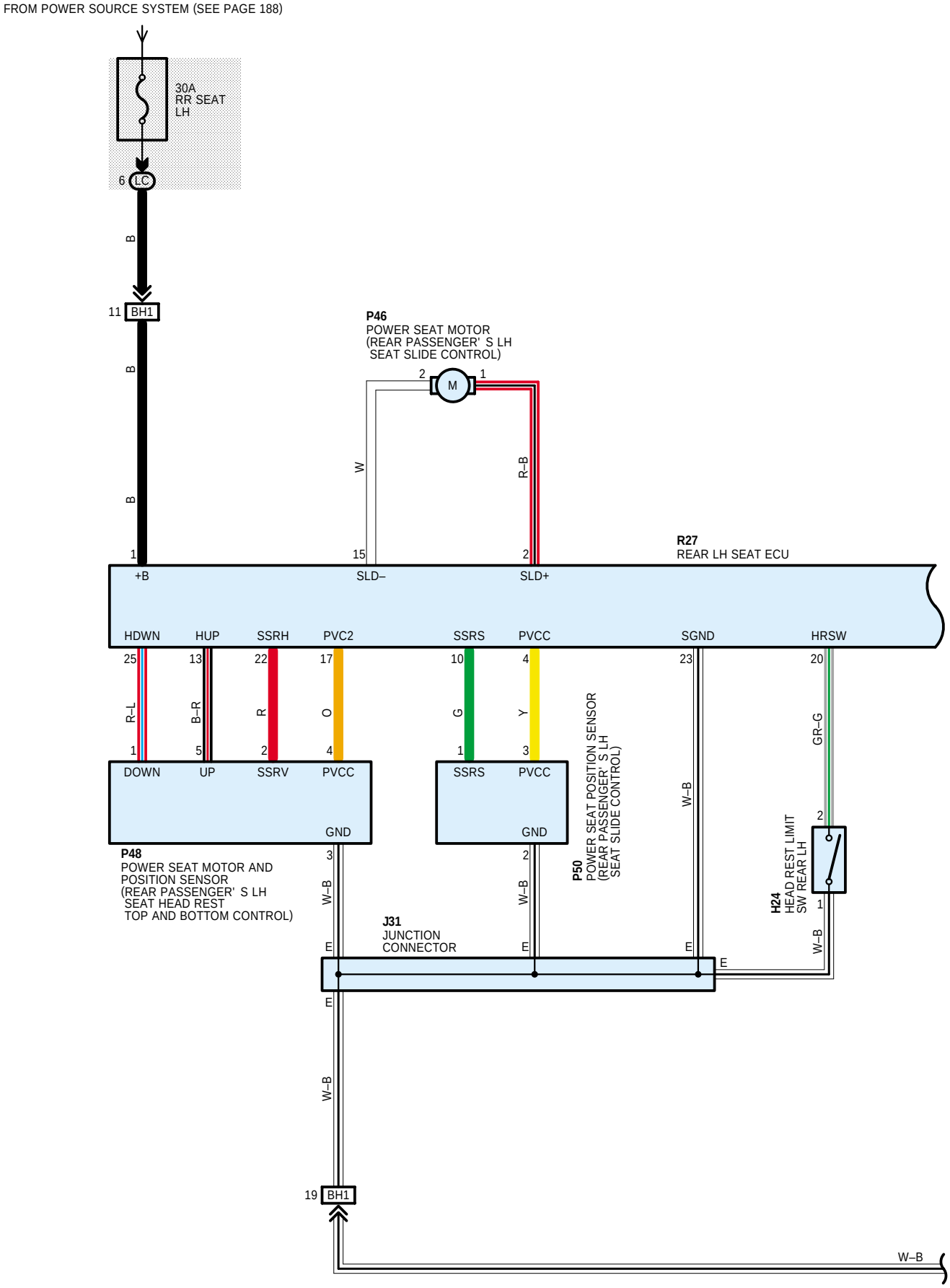

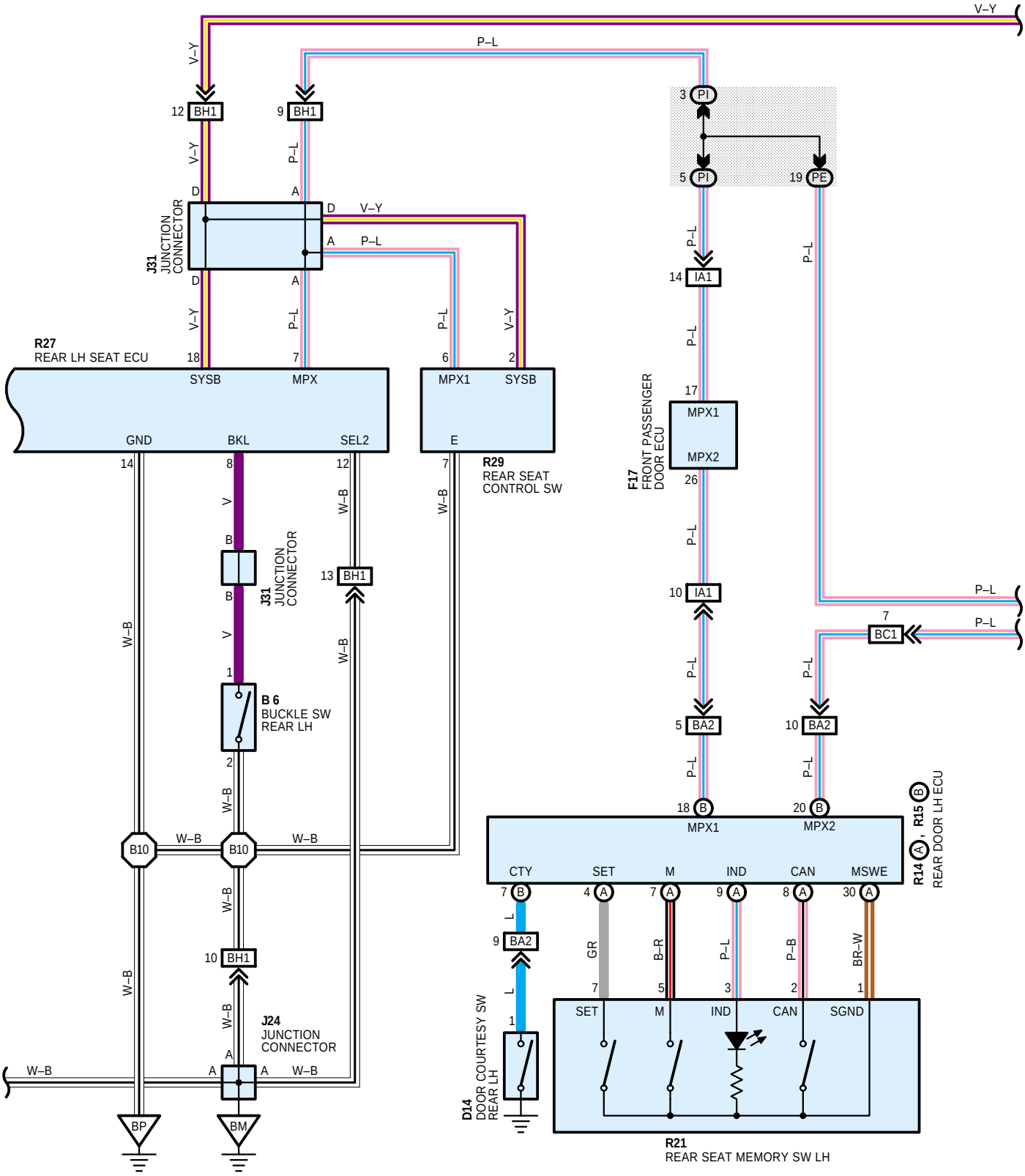
V–Y
P–L
12 BH1
9 BH1
3 PI
5 PI
19 PE
J31 JUNCTION CONNECTOR
D
A
R27
REAR LH SEAT ECU
18
7
6
2
SYSB
MPX
MPX1
SYSB
GND
BKL
SEL2
E
14
8
12
7
R29
REAR SEAT CONTROL SW
V
B
W–B
13 BH1
14 IA1
17
MPX1
MPX2
26
F17
FRONT PASSENGER DOOR ECU
10 IA1
7
BC1
1
B 6
BUCKLE SW REAR LH
2
5 BA2
10 BA2
18 B
20 B
MPX1
MPX2
R14 A , R15 B
REAR DOOR LH ECU
B10
CTY
SET
M
IND
CAN
MSWE
7 B
4 A
7 A
9 A
8 A
30 A
L
9 BA2
GR
B–R
P–L
P–B
BR–W
7
5
3
2
1
10 BH1
J24
JUNCTION CONNECTOR
SET
M
IND
CAN
SGND
D14
DOOR COURTESY SW REAR LH
BP
BM
R21
REAR SEAT MEMORY SW LH

POWER SEAT (REAR PASSENGER'S SEAT) [RHD]

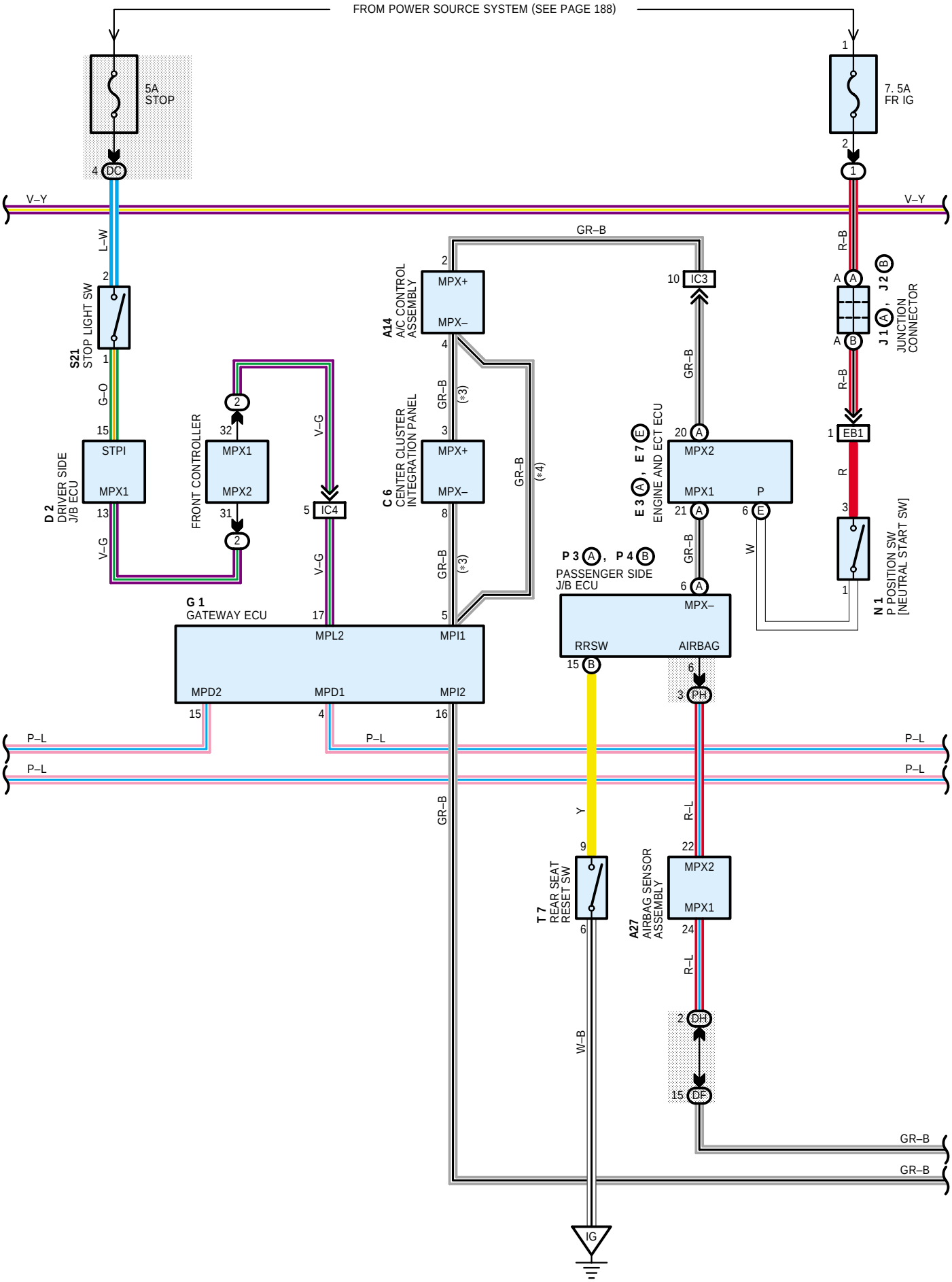

* 1 : W/O SMART KEY SYSTEM
* 2 : W/ SMART KEY SYSTEM
* 3 : W/O LEXUS NAVIGATION SYSTEM
* 4 : W/ LEXUS NAVIGATION SYSTEM

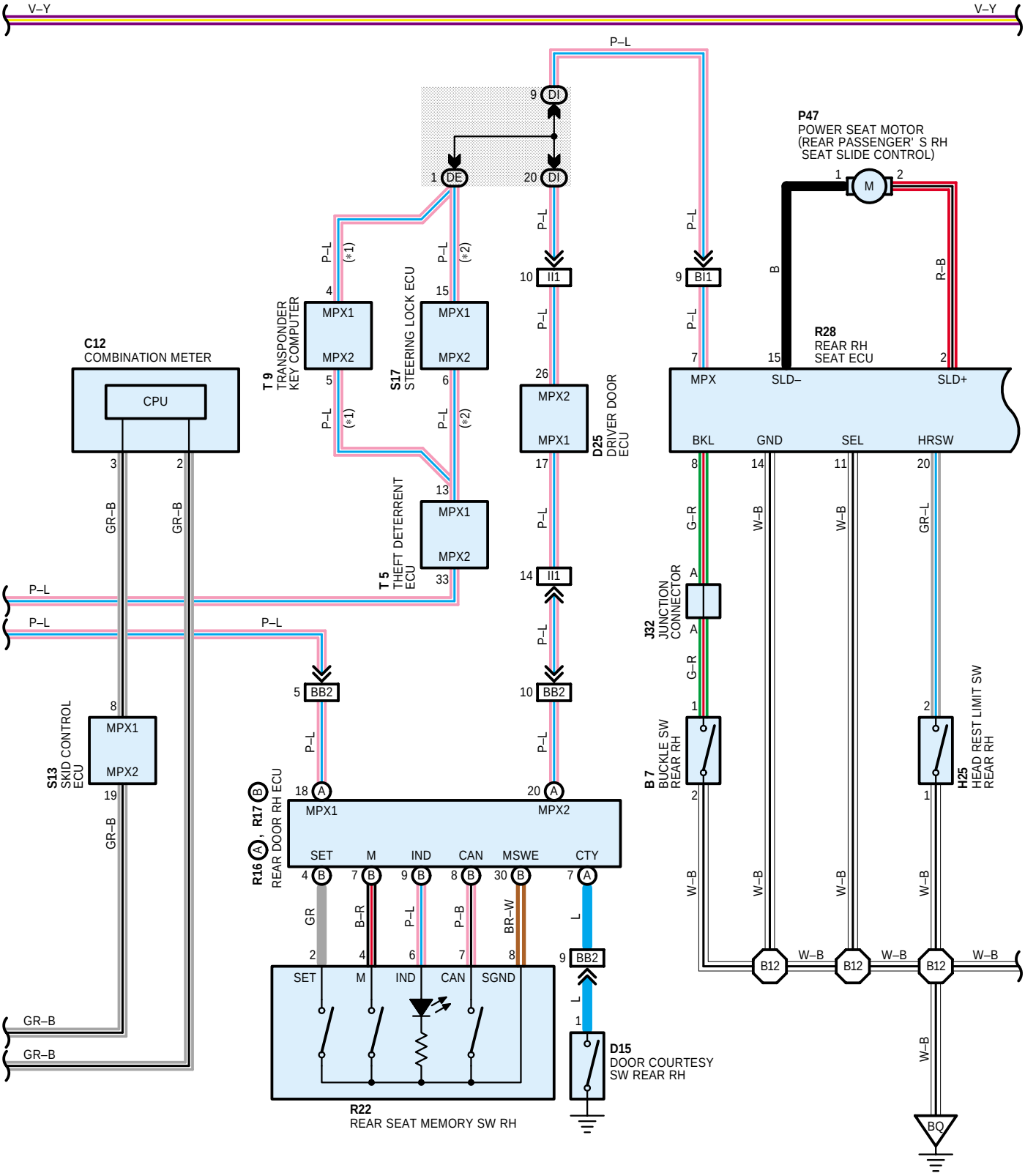
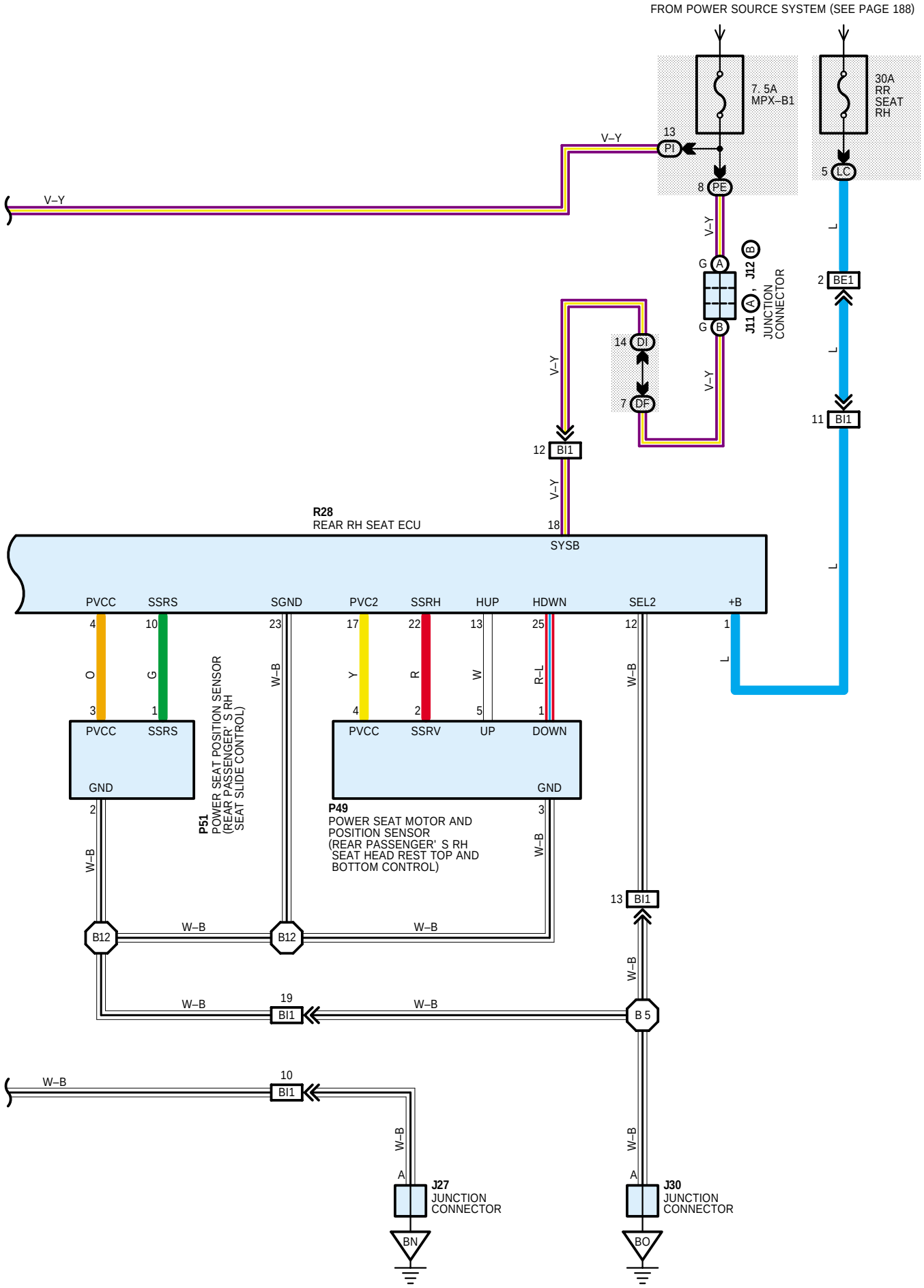
POWER SEAT (REAR PASSENGER'S SEAT) [RHD]