POWER SHOULDER BELT ANCHORAGE (RHD)

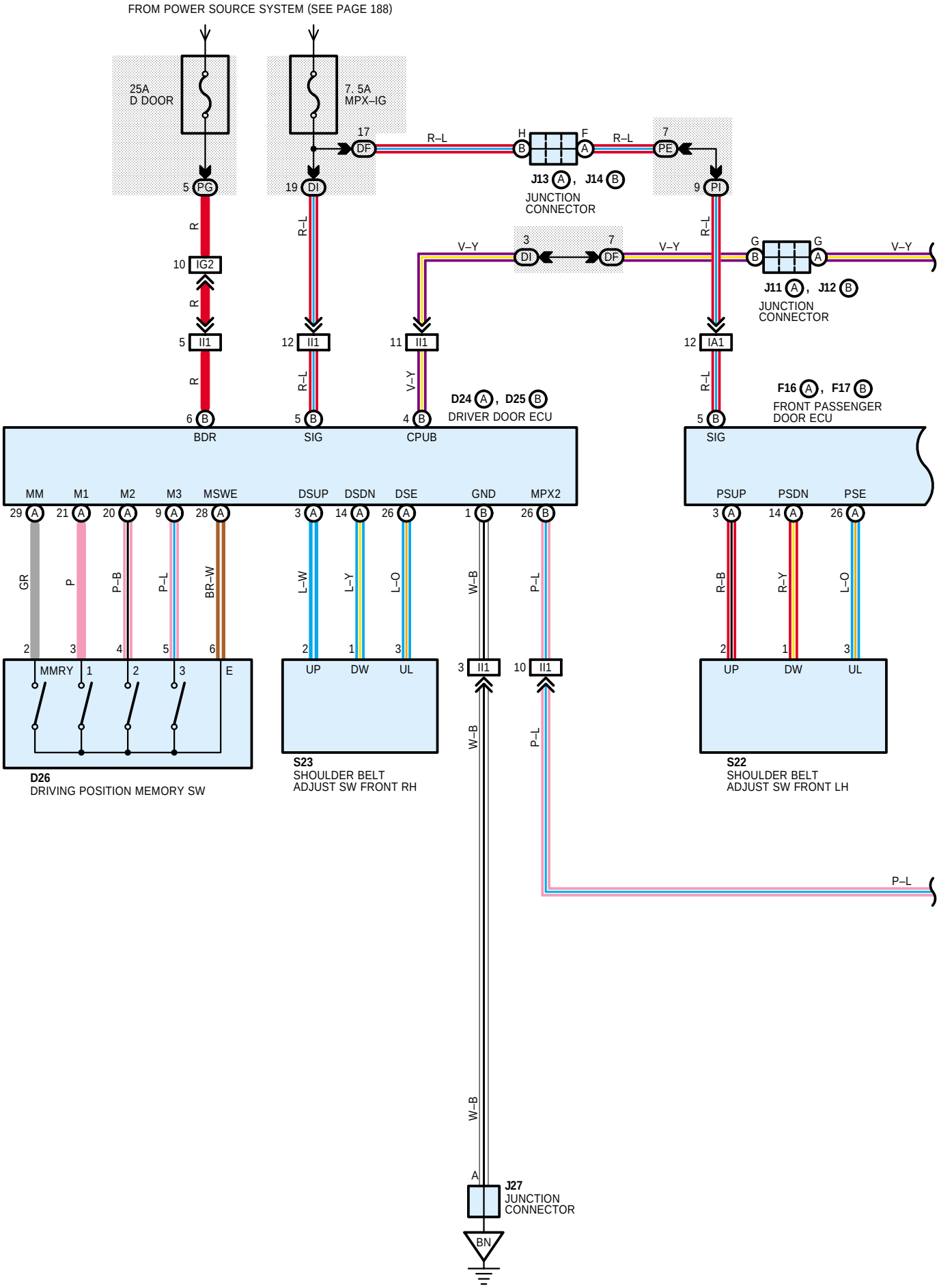

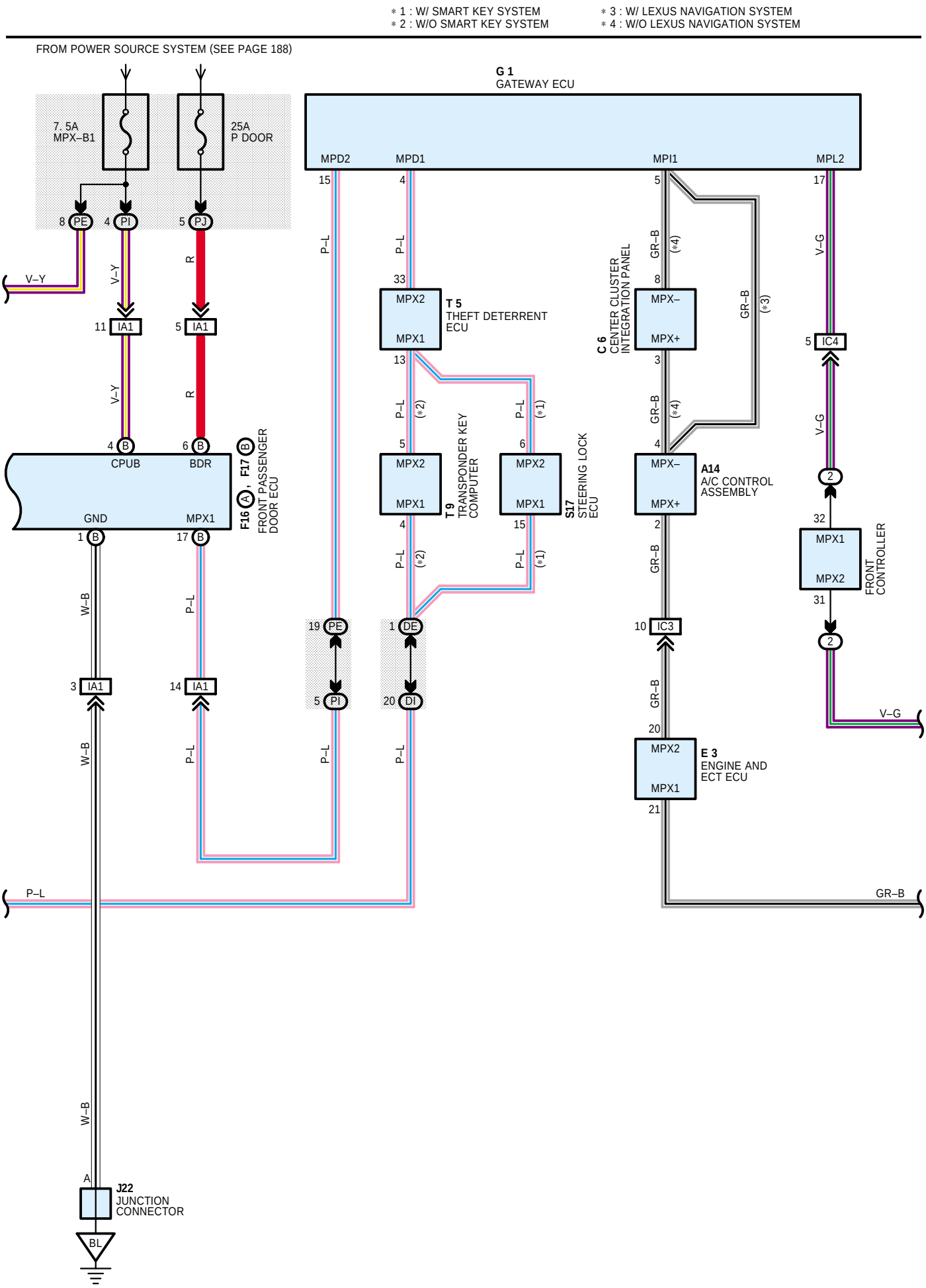

* 1 : W/ SMART KEY SYSTEM
* 2 : W/O SMART KEY SYSTEM
* 3 : W/ LEXUS NAVIGATION SYSTEM
* 4 : W/O LEXUS NAVIGATION SYSTEM
FROM POWER SOURCE SYSTEM (SEE PAGE 188)
7. 5A
MPX–B1
25A
P DOOR
G 1
GATEWAY ECU
MPD2
MPD1
MPI1
MPL2
V–Y
R
IA1
CPUB
BDR
GND
MPX1
F16 A , F17 B
FRONT PASSENGER
DOOR ECU
W–B
P–L
MPX2
MPX1
T 5
THEFT DETERRENT
ECU
T 9
TRANSPONDER KEY
COMPUTER
S17
STEERING LOCK
ECU
C 6
CENTER CLUSTER
INTEGRATION PANEL
MPX–
MPX+
A14
A/C CONTROL
ASSEMBLY
IC3
IC4
GR–B
V–G
FRONT
CONTROLLER
E 3
ENGINE AND
ECT ECU
J22
JUNCTION
CONNECTOR
BL
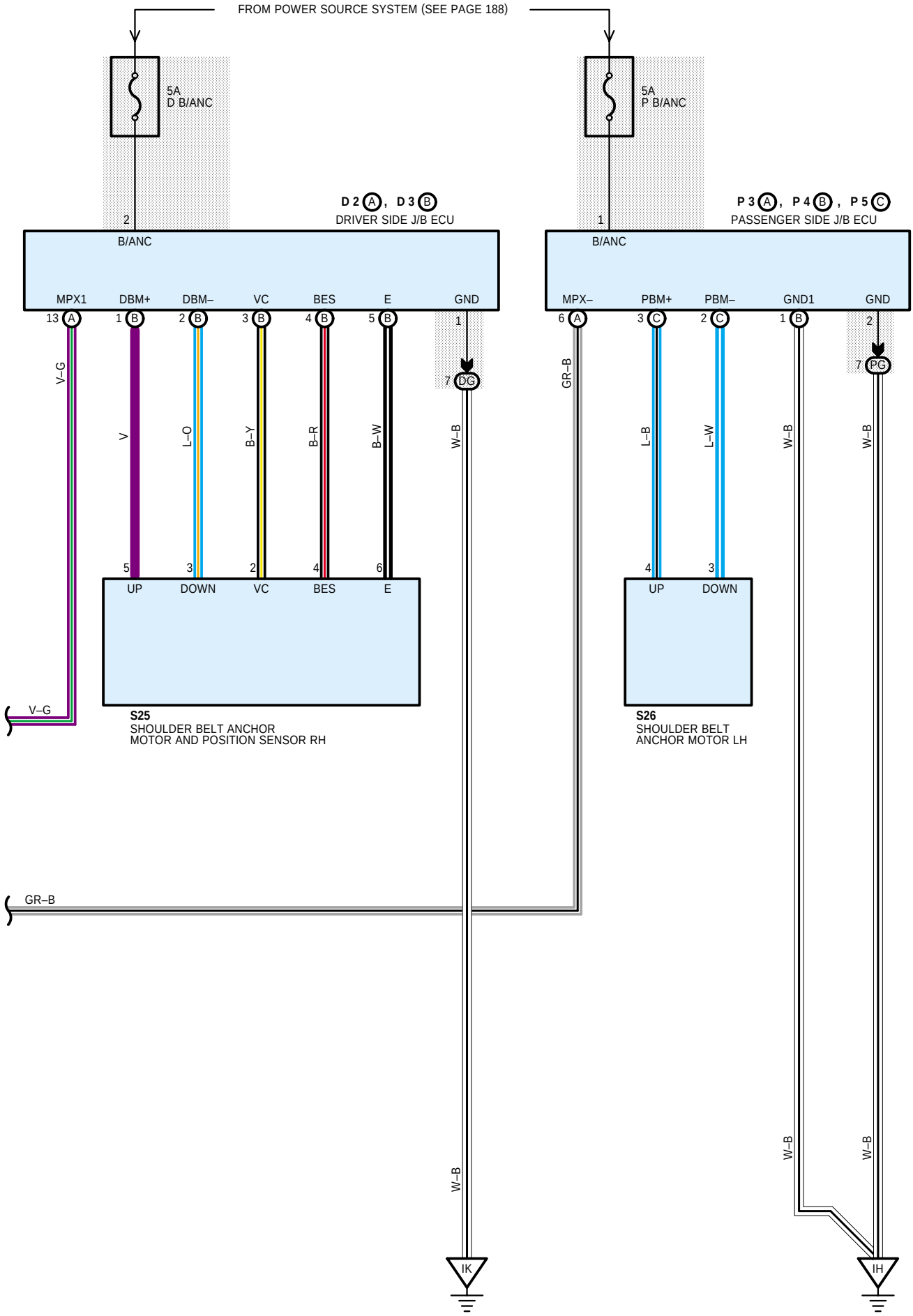
POWER SHOULDER BELT ANCHORAGE (RHD)