POWER SOURCE (RHD)

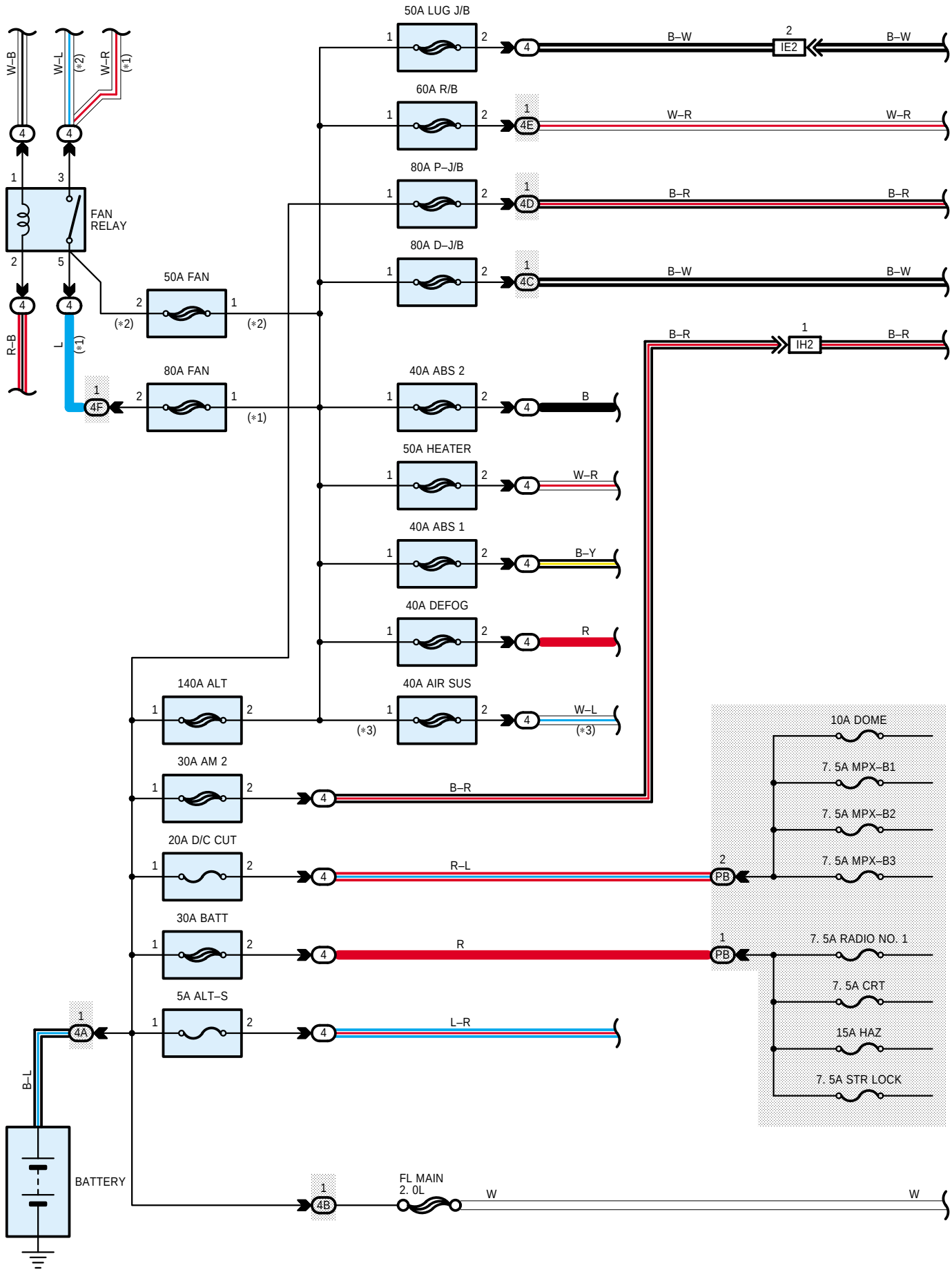

* 1 : AUSTRALIA
* 2 : EUROPE
* 3 : W/ ELECTRONIC MODULATED AIR SUSPENSION

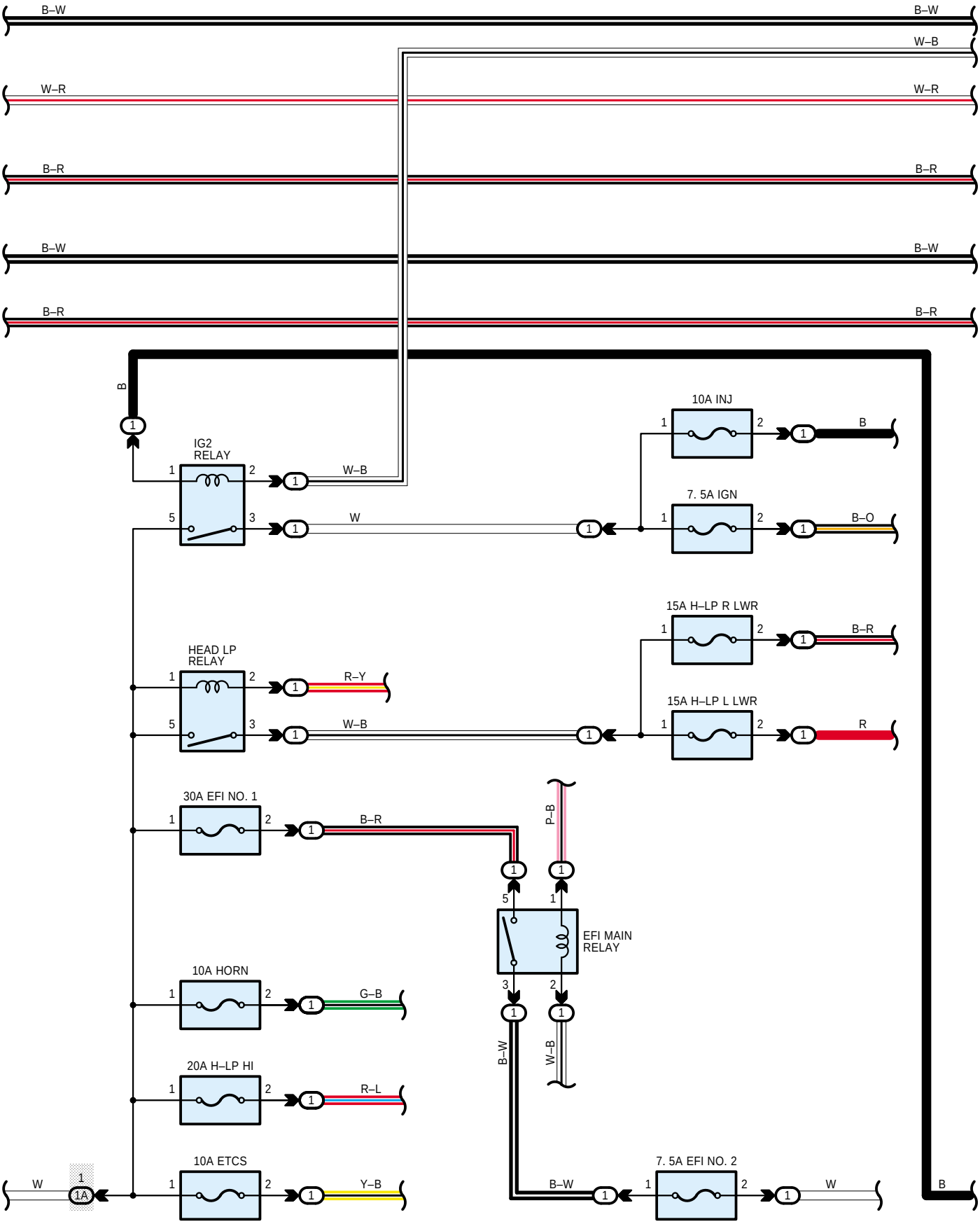

POWER SOURCE (RHD)

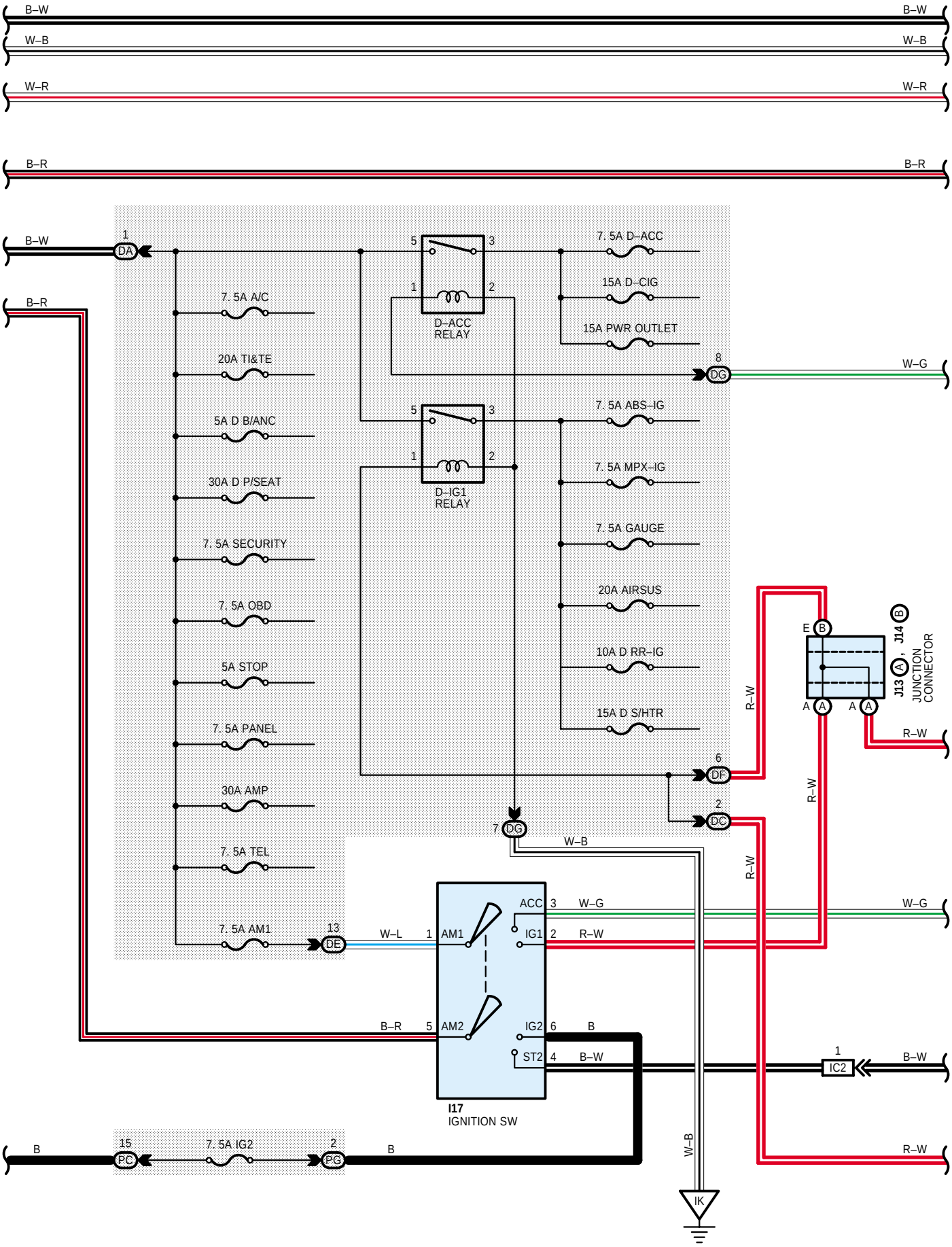

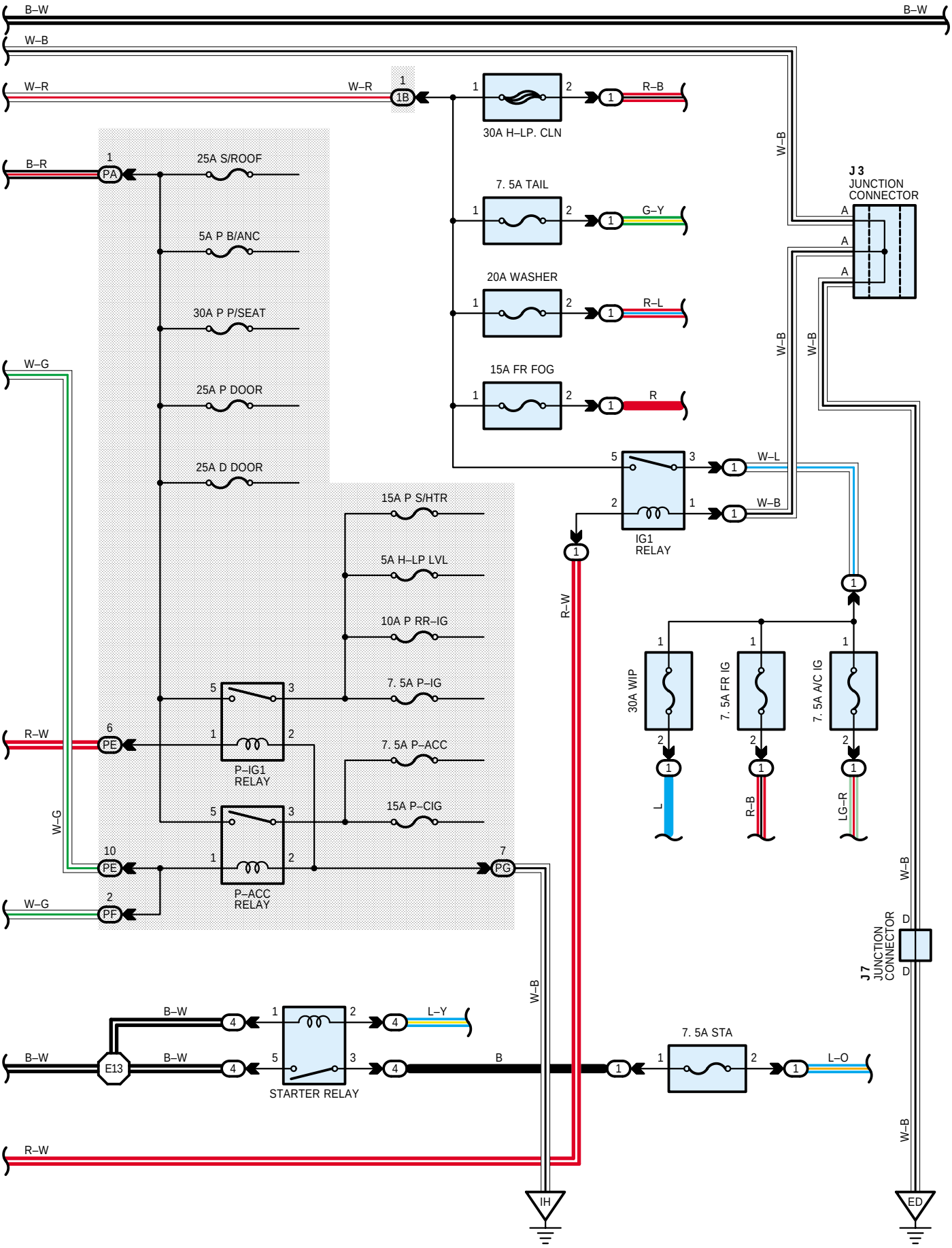
B–W
B–W
W–B
W–R
W–R
1B
30A H–LP. CLN
R–B
B–R
PA
25A S/ROOF
7. 5A TAIL
G–Y
5A P B/ANC
20A WASHER
R–L
30A P P/SEAT
15A FR FOG
R
W–G
25A P DOOR
25A D DOOR
J 3
JUNCTION
CONNECTOR
W–L
W–B
IG1
RELAY
15A P S/HTR
5A H–LP LVL
10A P RR–IG
R–W
30A WIP
7. 5A FR IG
7. 5A A/C IG
7. 5A P–IG
R–W
PE
P–IG1
RELAY
7. 5A P–ACC
15A P–CIG
W–G
PE
PG
P–ACC
RELAY
W–G
PF
J7
JUNCTION
CONNECTOR
L
R–B
LG–R
B–W
L–Y
B–W
E13
B–W
STARTER RELAY
B
7. 5A STA
L–O
R–W
IH
ED
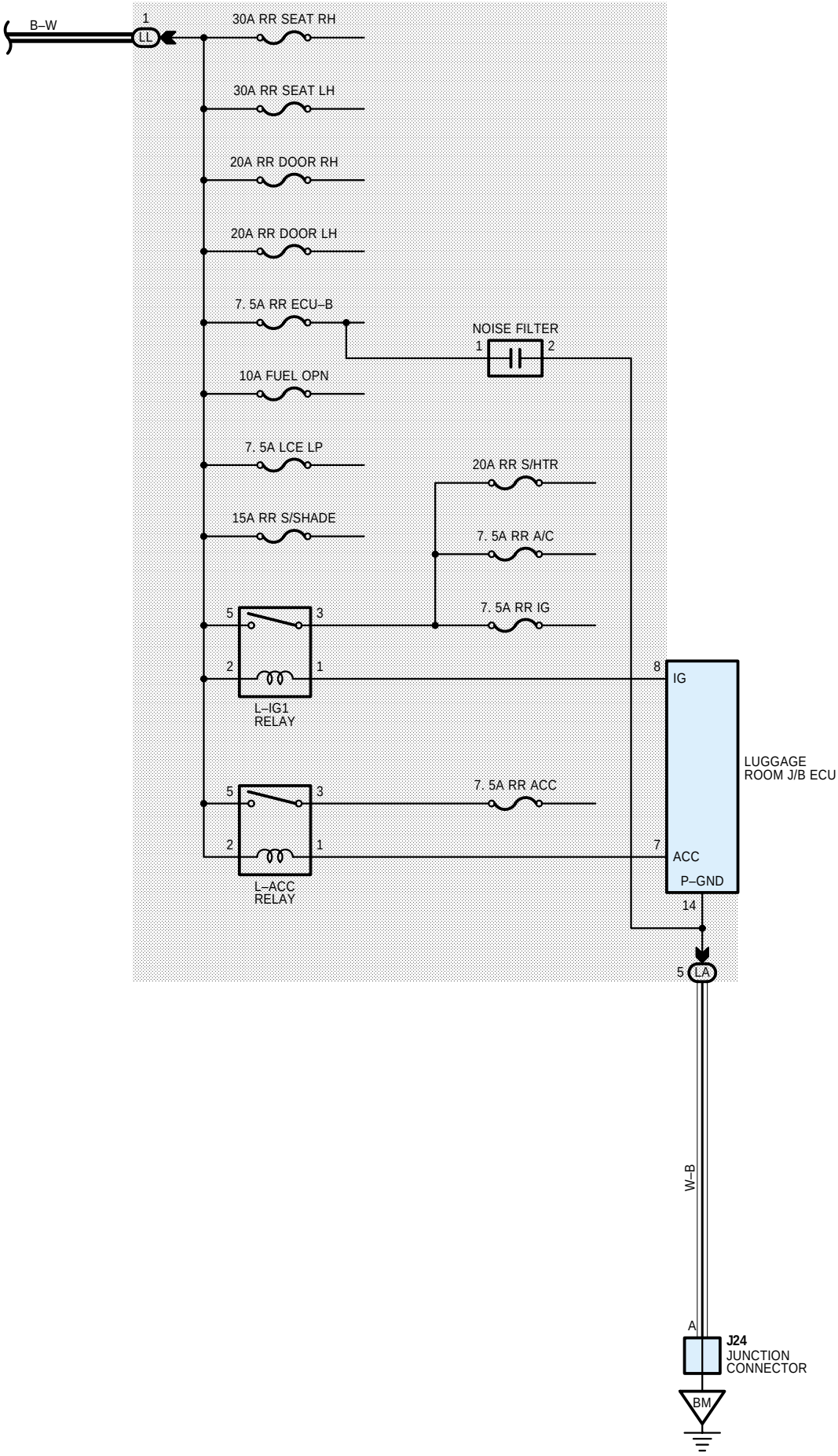
POWER SOURCE (RHD)