MIRROR HEATER (RHD)

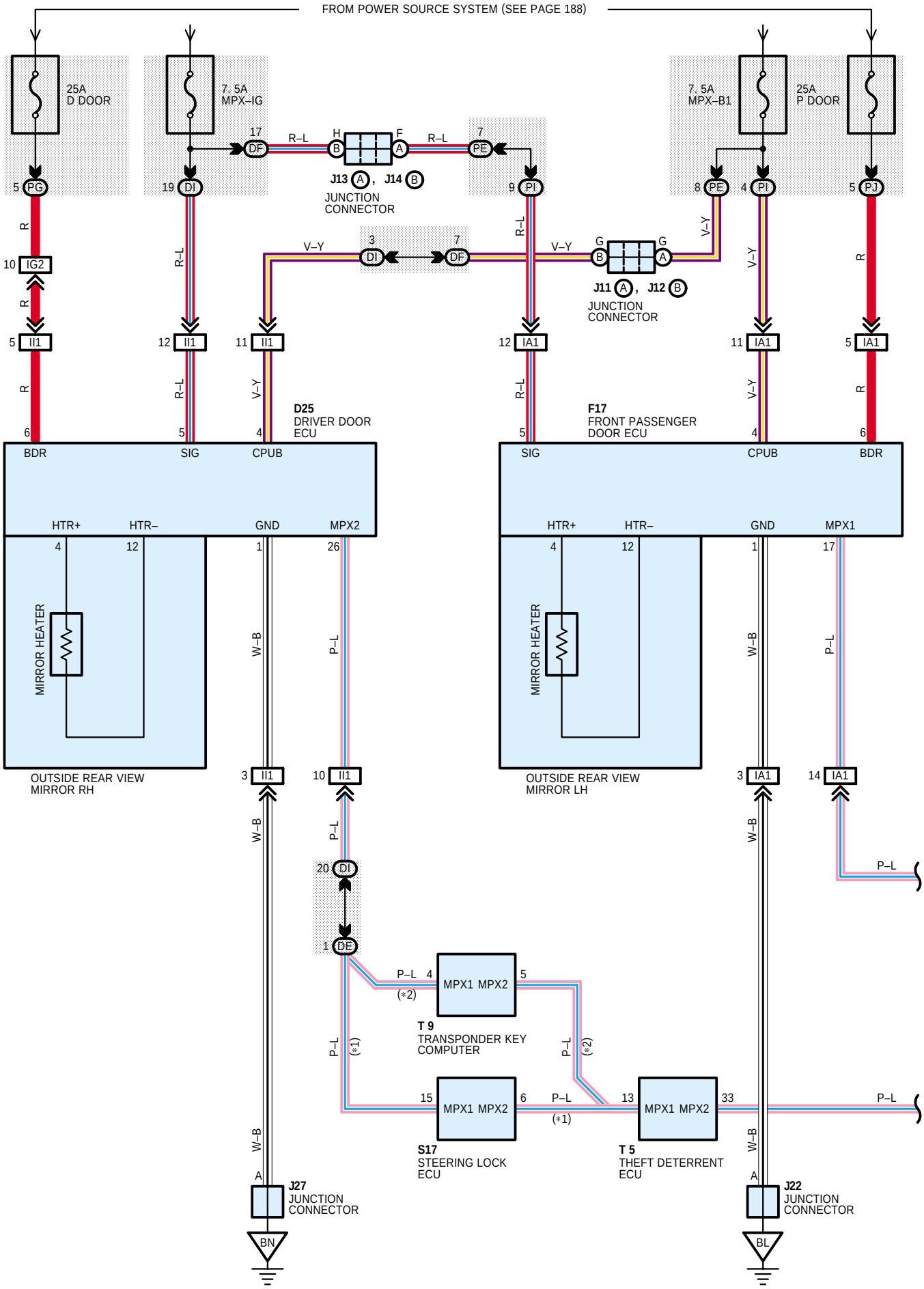

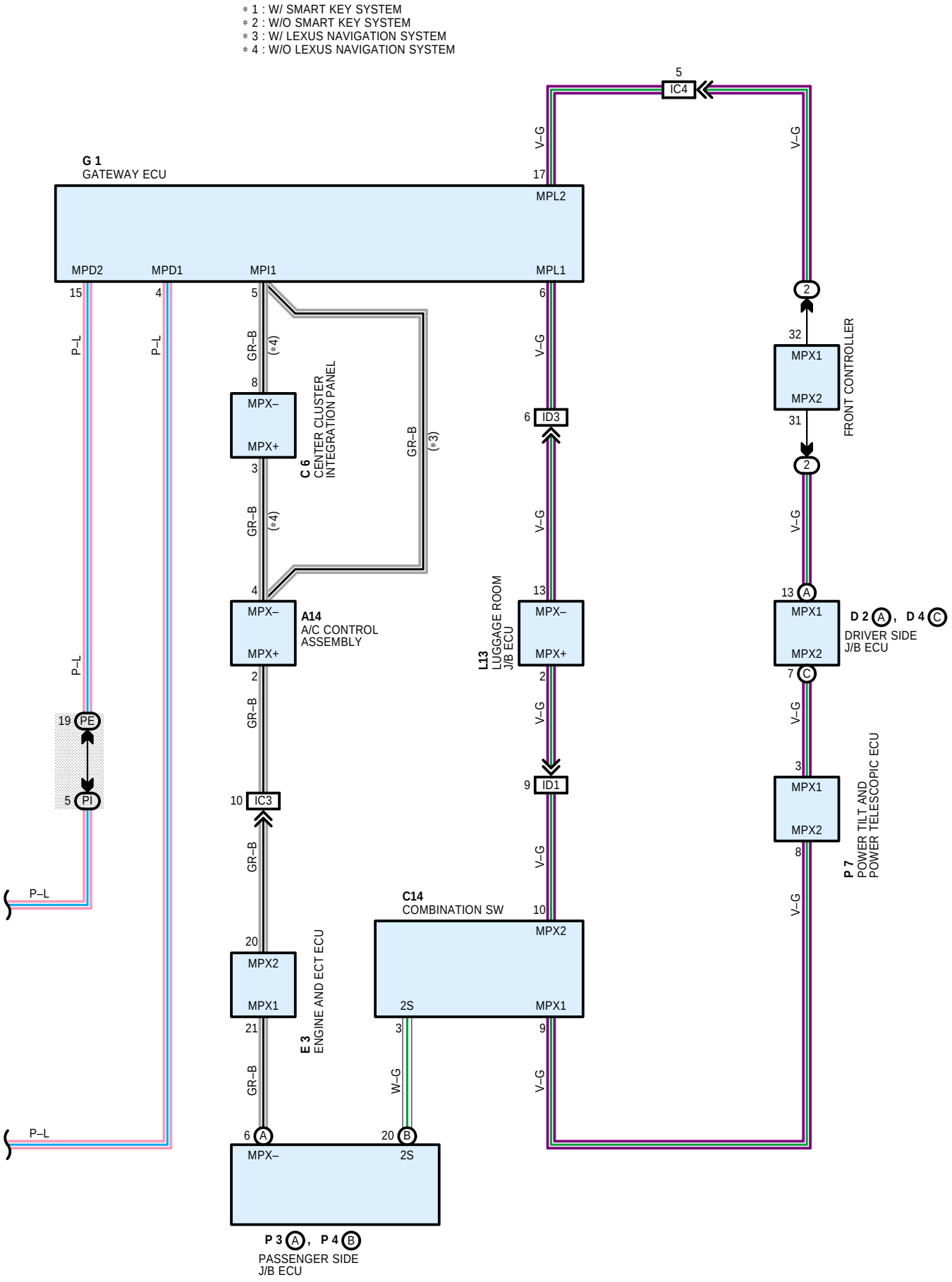

* 1 : W/ SMART KEY SYSTEM
* 2 : W/O SMART KEY SYSTEM
* 3 : W/ LEXUS NAVIGATION SYSTEM
* 4 : W/O LEXUS NAVIGATION SYSTEM
G 1
GATEWAY ECU
MPL2
MPD2
MPD1
MPI1
MPL1
IC4
V–G
P–L
GR–B
(*4)
(*3)
MPX–
MPX+
C 6
CENTER CLUSTER
INTEGRATION PANEL
ID3
FRONT CONTROLLER
MPX1
MPX2
A14
A/C CONTROL
ASSEMBLY
L13
LUGGAGE ROOM
J/B ECU
D 2 A, D 4 C
DRIVER SIDE
J/B ECU
PE
PI
IC3
ID1
P 7
POWER TILT AND
POWER TELESCOPIC ECU
C14
COMBINATION SW
2S
E 3
ENGINE AND ECT ECU
W–G
P 3 A, P 4 B
PASSENGER SIDE
J/B ECU