MULTIPLEX COMMUNICATION SYSTEM (COMMUNICATION BUS) [RHD]

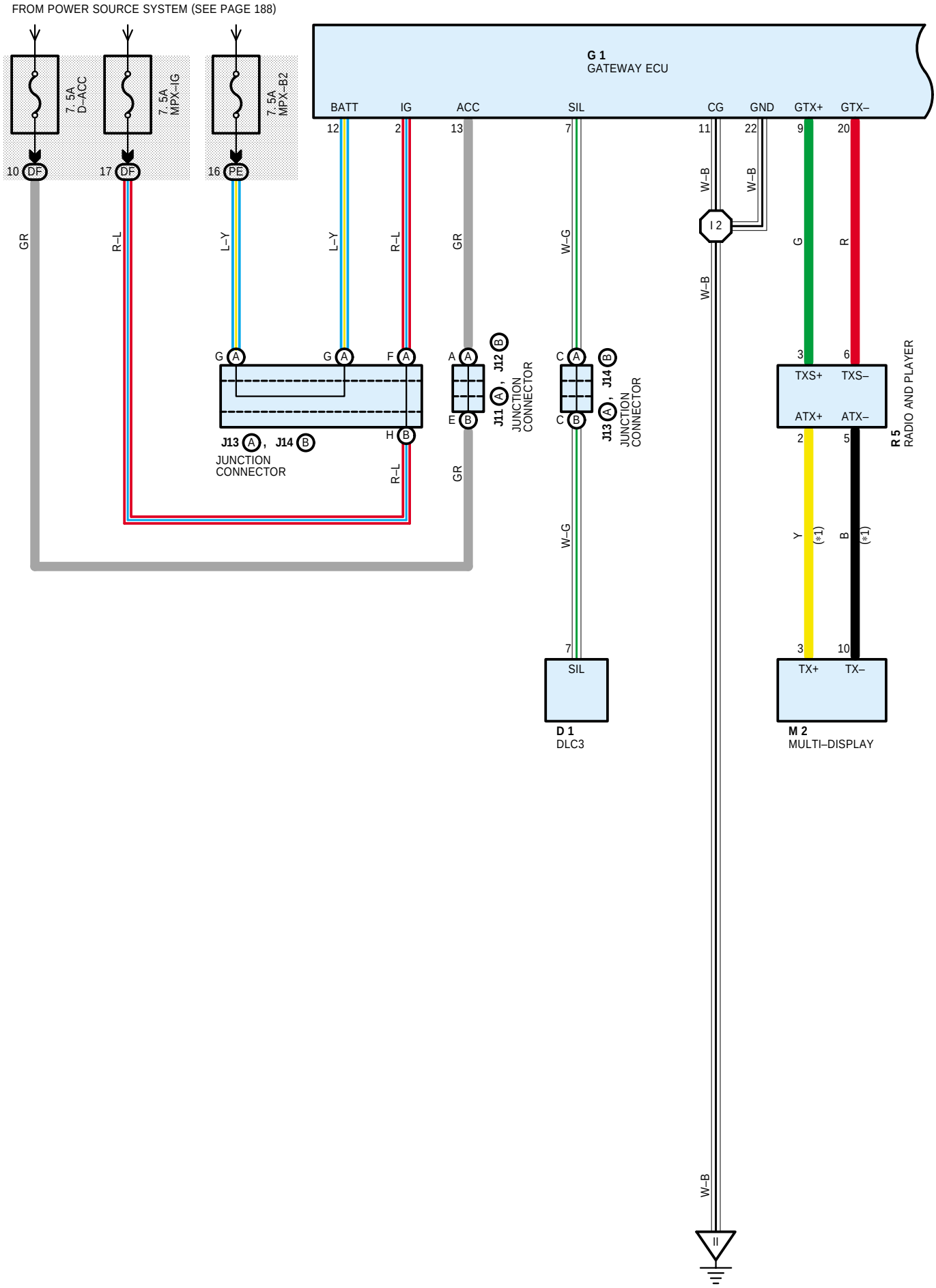

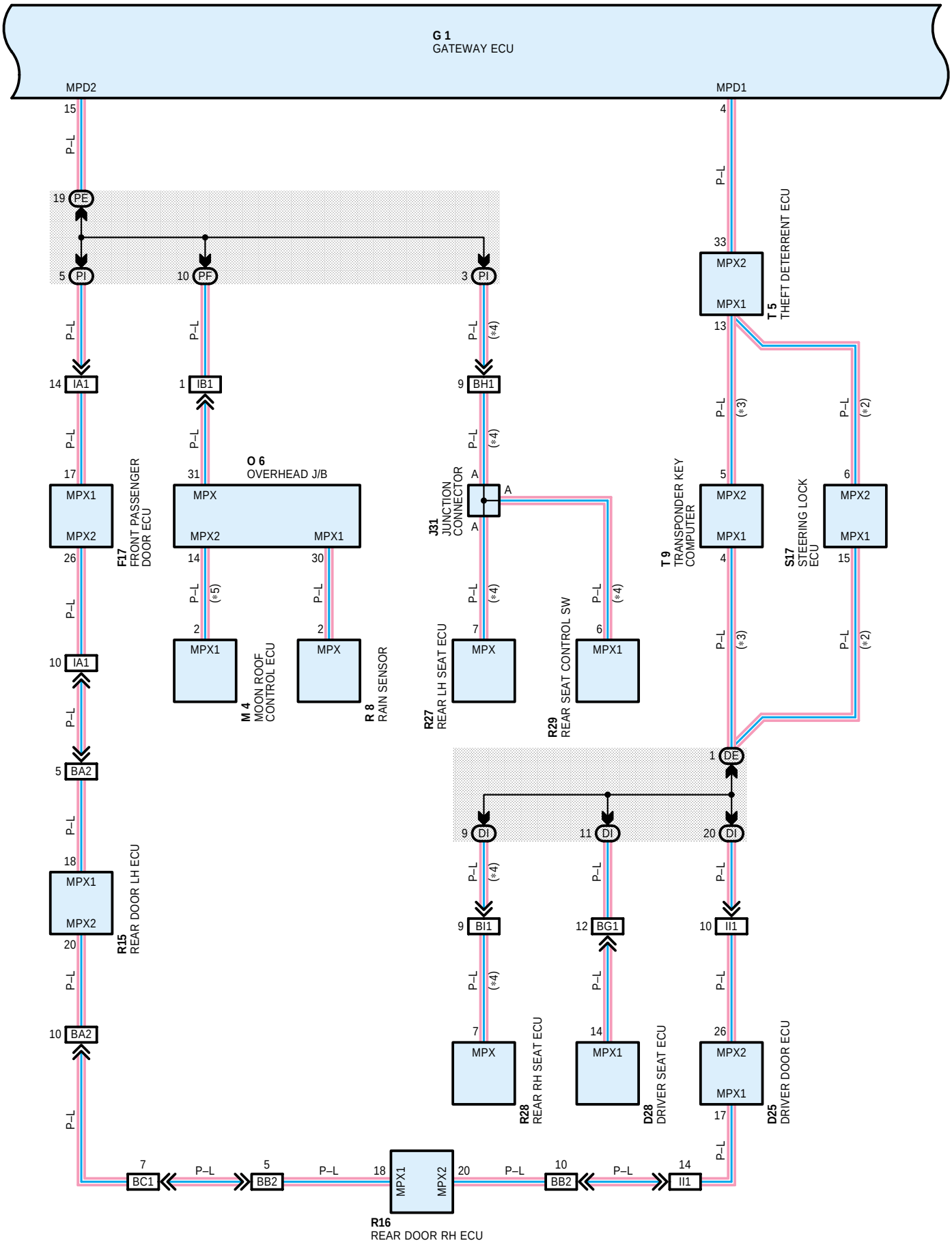
G 1
GATEWAY ECU
MPD2
MPD1
F17
FRONT PASSENGER DOOR ECU
O 6
OVERHEAD J/B
J31
JUNCTION CONNECTOR
T 9
TRANSPONDER KEY COMPUTER
T 5
THEFT DETERRENT ECU
S17
STEERING LOCK ECU
M 4
MOON ROOF CONTROL ECU
R 8
RAIN SENSOR
R27
REAR LH SEAT ECU
R29
REAR SEAT CONTROL SW
R15
REAR DOOR LH ECU
R28
REAR RH SEAT ECU
D28
DRIVER SEAT ECU
D25
DRIVER DOOR ECU
R16
REAR DOOR RH ECU

MULTIPLEX COMMUNICATION SYSTEM (COMMUNICATION BUS) [RHD]

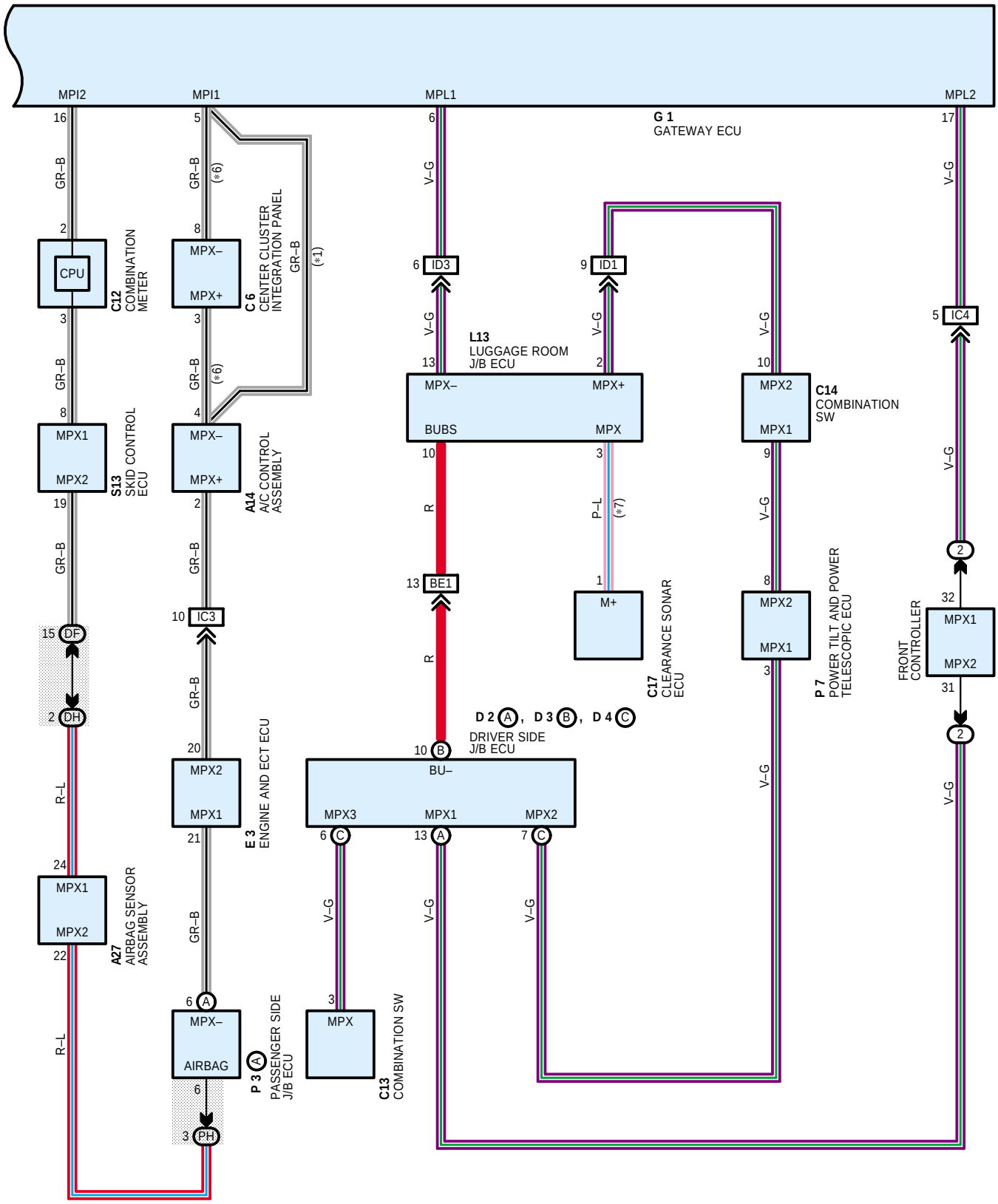

* 1 : W/ LEXUS NAVIGATION SYSTEM
* 6 : W/O LEXUS NAVIGATION SYSTEM
* 7 : W/ LEXUS PARK ASSIST (CLEARANCE SONAR)