# LEXUS PARK ASSIST (CLEARANCE SONAR) [RHD]

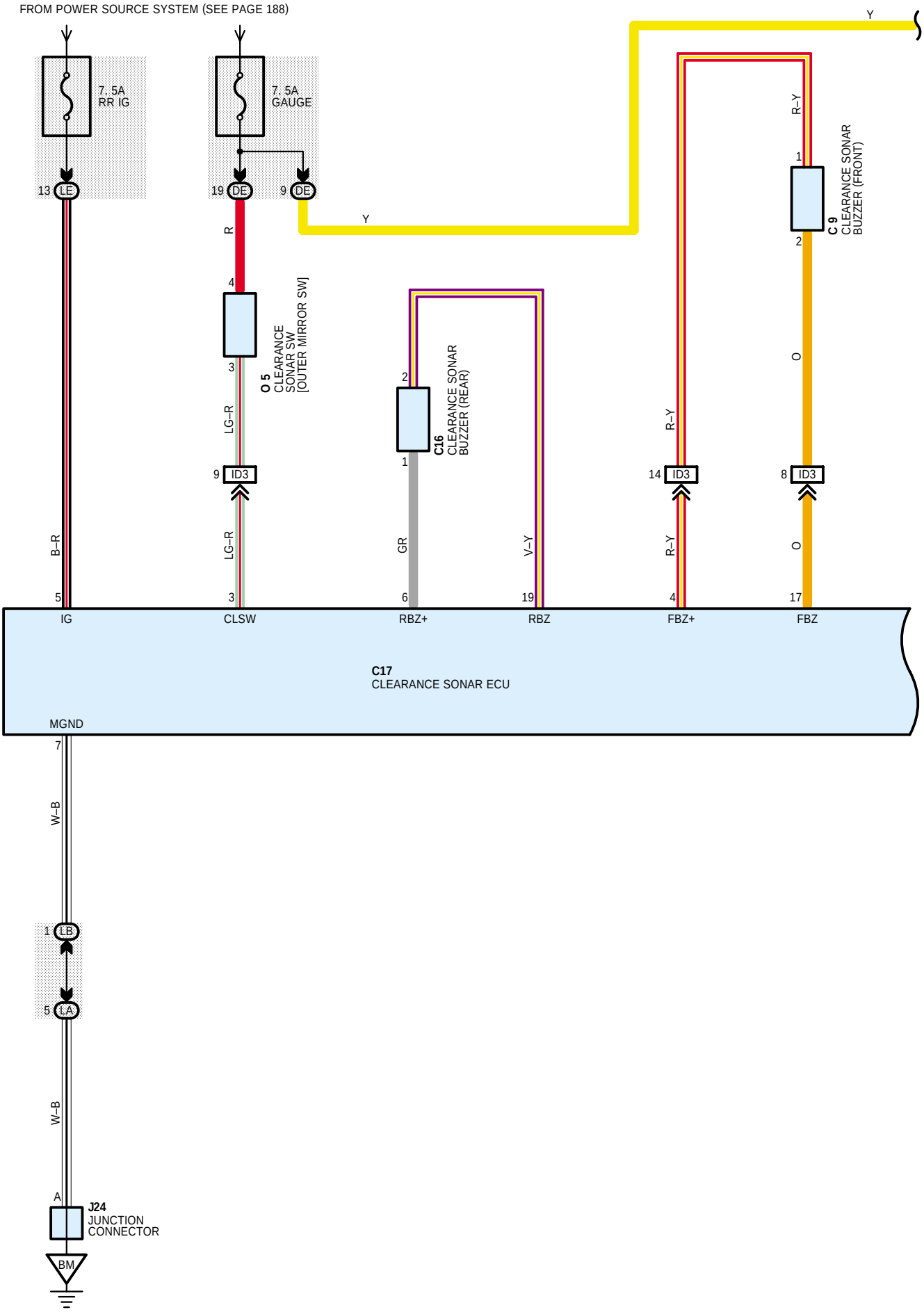

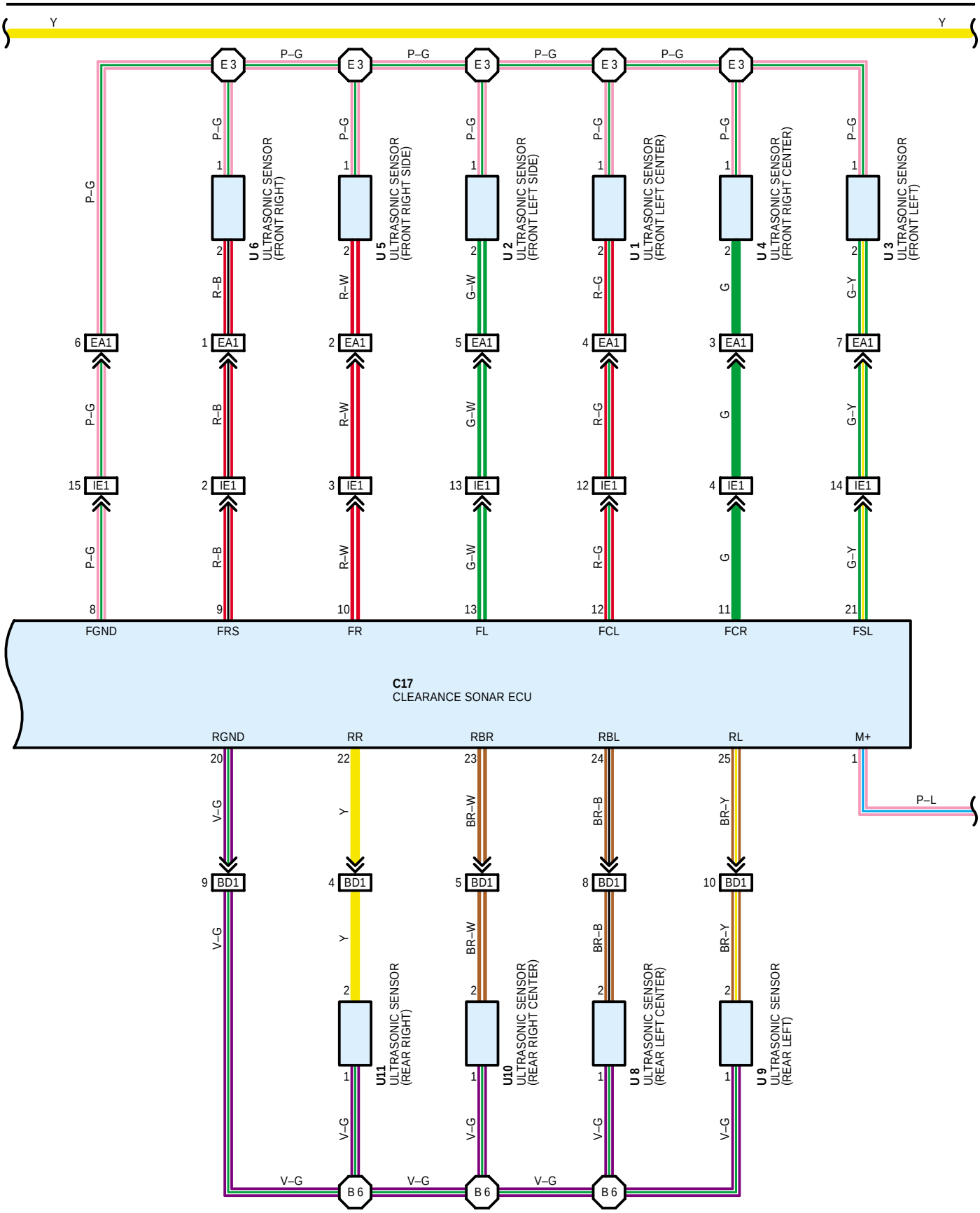
Y
Y
E 3
P–G
U 6
ULTRASONIC SENSOR
(FRONT RIGHT)
U 5
ULTRASONIC SENSOR
(FRONT RIGHT SIDE)
U 2
ULTRASONIC SENSOR
(FRONT LEFT SIDE)
U 1
ULTRASONIC SENSOR
(FRONT LEFT CENTER)
U 4
ULTRASONIC SENSOR
(FRONT RIGHT CENTER)
U 3
ULTRASONIC SENSOR
(FRONT LEFT)
R–B
R–W
G–W
R–G
G
G–Y
EA1
IE1
FGND
FRS
FR
FL
FCL
FCR
FSL
C17
CLEARANCE SONAR ECU
RGND
RR
RBR
RBL
RL
M+
P–L
V–G
Y
BR–W
BR–B
BR–Y
BD1
U11
ULTRASONIC SENSOR
(REAR RIGHT)
U10
ULTRASONIC SENSOR
(REAR RIGHT CENTER)
U 8
ULTRASONIC SENSOR
(REAR LEFT CENTER)
U 9
ULTRASONIC SENSOR
(REAR LEFT)
B 6

# LEXUS PARK ASSIST (CLEARANCE SONAR) [RHD]

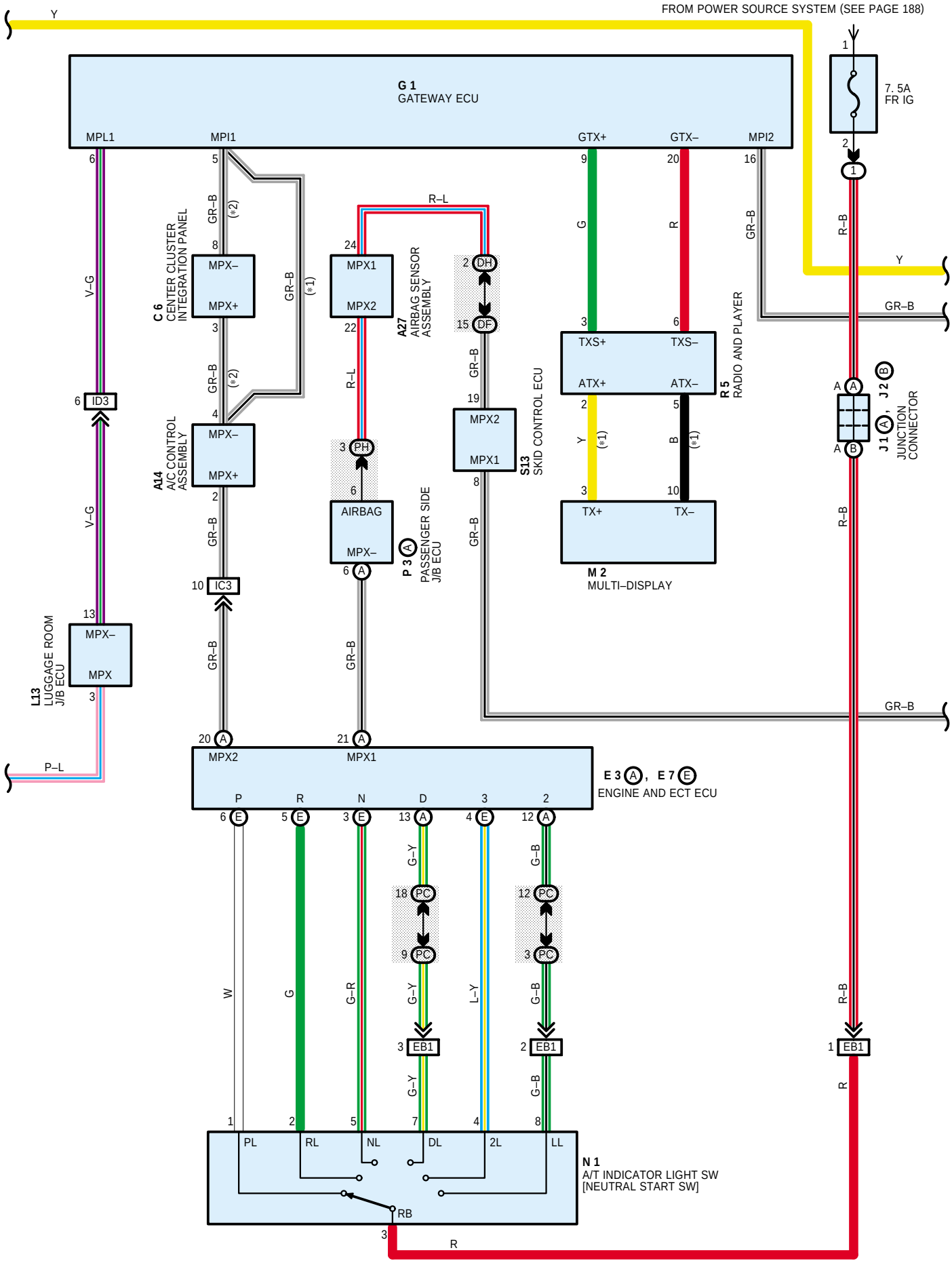

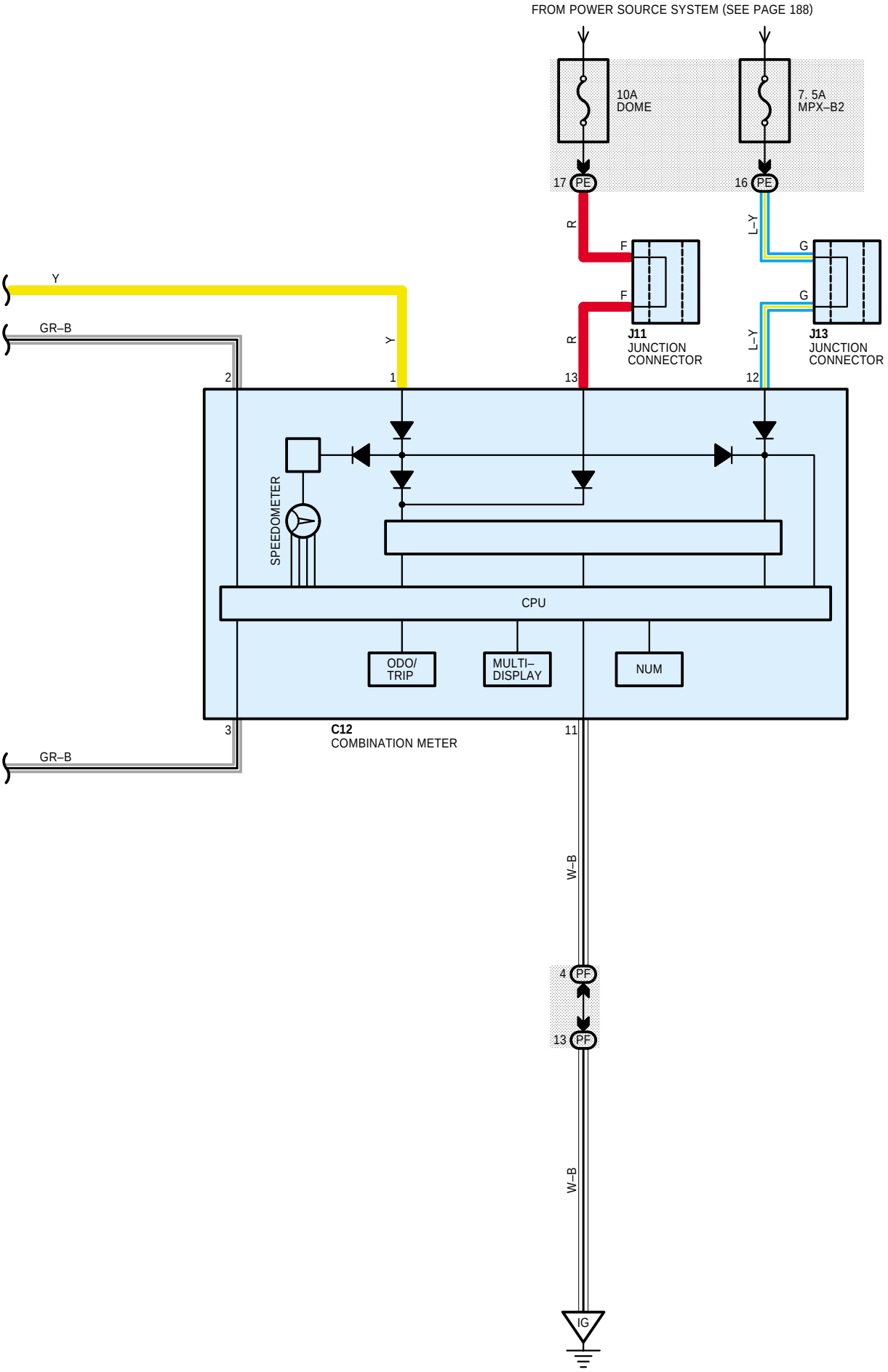
FROM POWER SOURCE SYSTEM (SEE PAGE 188)
10A
DOME
7. 5A
MPX–B2
17 PE
16 PE
R
L–Y
F
G
F
G
J11
JUNCTION
CONNECTOR
J13
JUNCTION
CONNECTOR
Y
GR–B
Y
R
L–Y
2
1
13
12
SPEEDOMETER
CPU
ODO/
TRIP
MULTI–
DISPLAY
NUM
3
C12
COMBINATION METER
11
GR–B
W–B
4 PF
13 PF
W–B
IG