LUGGAGE COMPARTMENT DOOR OPENER AND CLOSER (RHD)

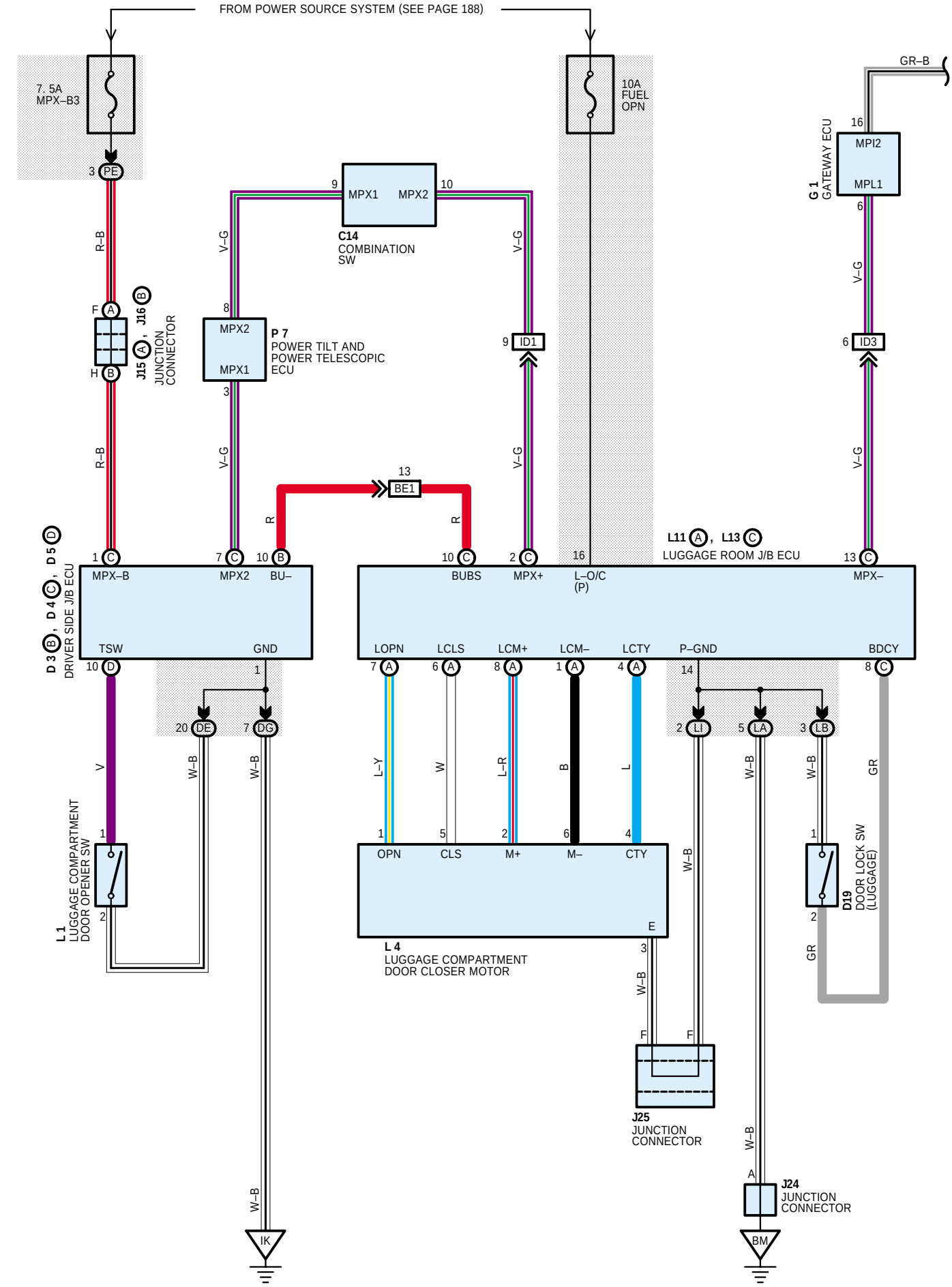

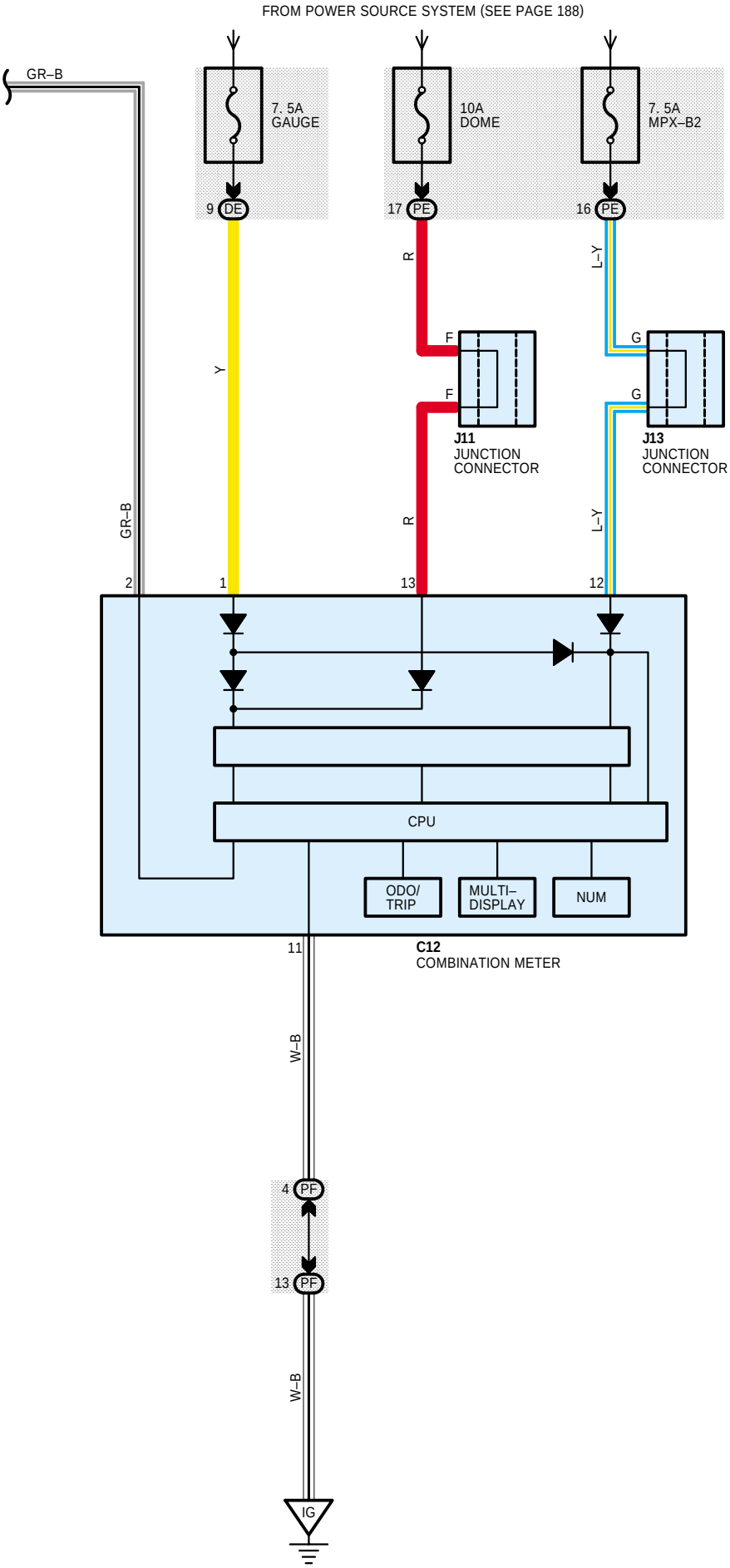
FROM POWER SOURCE SYSTEM (SEE PAGE 188)
GR–B
7. 5A
GAUGE
10A
DOME
7. 5A
MPX–B2
9 DE
17 PE
16 PE
R
L–Y
F
G
F
G
J11
JUNCTION
CONNECTOR
J13
JUNCTION
CONNECTOR
Y
GR–B
R
L–Y
2
1
13
12
CPU
ODO/
TRIP
MULTI–
DISPLAY
NUM
11
C12
COMBINATION METER
W–B
4 PF
13 PF
W–B
IG