ILLUMINATION (RHD)

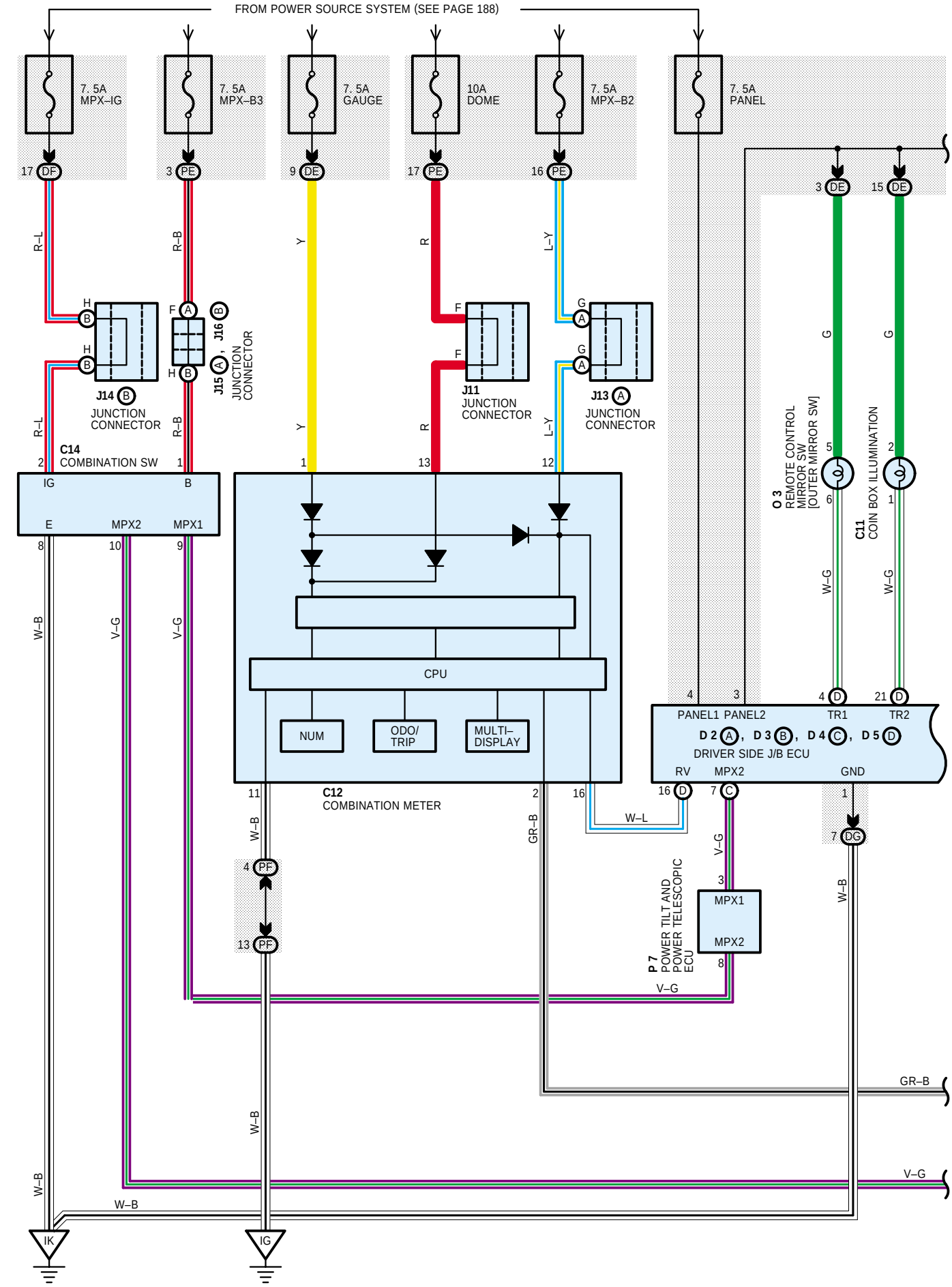

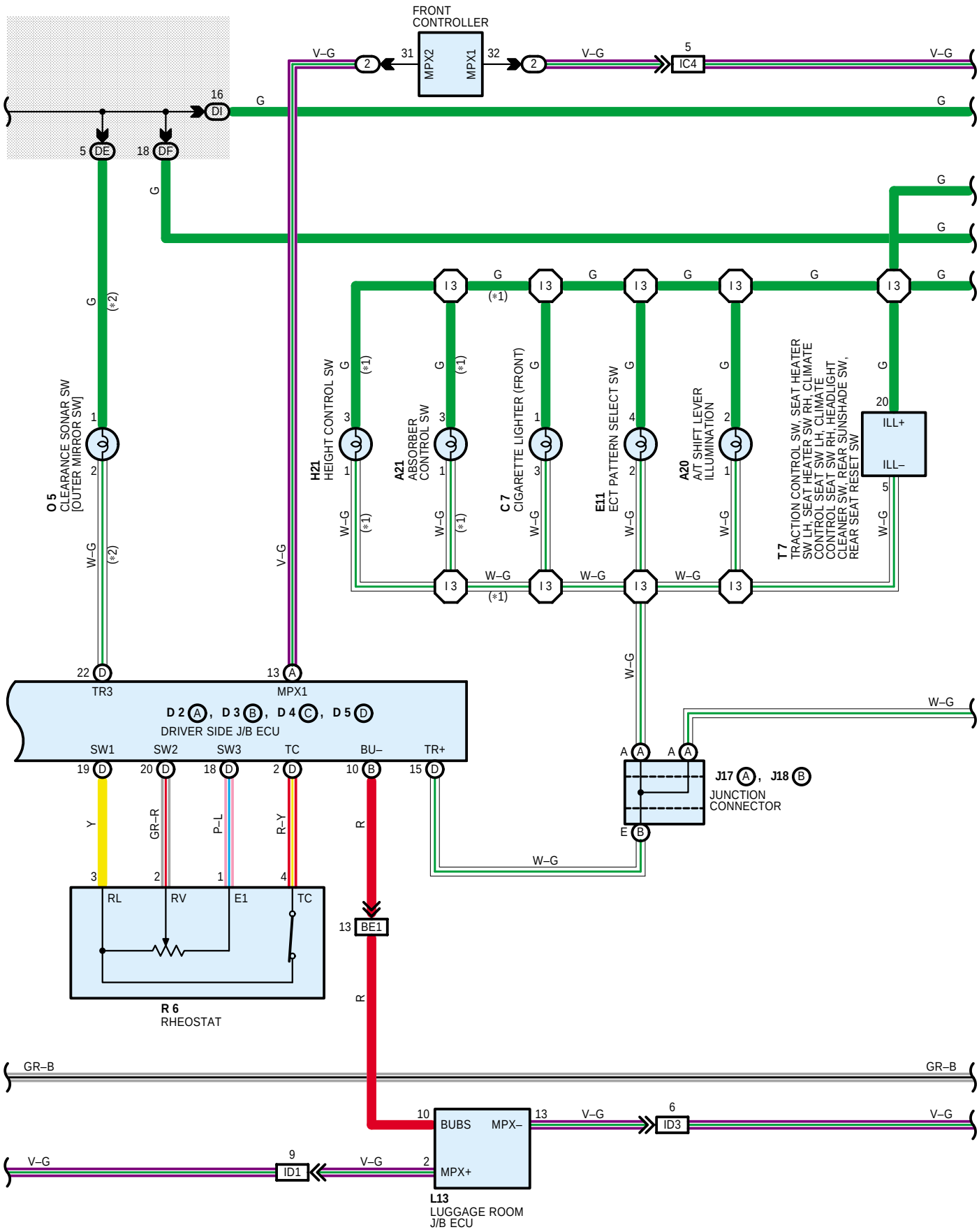
FRONT CONTROLLER
MPX2
MPX1
IC4
DI
DE
DF
O 5
CLEARANCE SONAR SW [OUTER MIRROR SW]
H21
HEIGHT CONTROL SW
A21
ABSORBER CONTROL SW
C 7
CIGARETTE LIGHTER (FRONT)
E11
ECT PATTERN SELECT SW
A20
A/T SHIFT LEVER ILLUMINATION
T 7
TRACTION CONTROL SW, SEAT HEATER SW LH, SEAT HEATER SW RH, CLIMATE CONTROL SEAT SW LH, CLIMATE CONTROL SEAT SW RH, HEADLIGHT CLEANER SW, REAR SUNSHADE SW, REAR SEAT RESET SW
ILL+
ILL–
TR3
MPX1
D 2 (A), D 3 (B), D 4 (C), D 5 (D)
DRIVER SIDE J/B ECU
SW1
SW2
SW3
TC
BU–
TR+
J17 (A), J18 (B)
JUNCTION CONNECTOR
RL
RV
E1
TC
R 6
RHEOSTAT
BE1
BUBS
MPX–
MPX+
ID3
ID1
L13
LUGGAGE ROOM J/B ECU

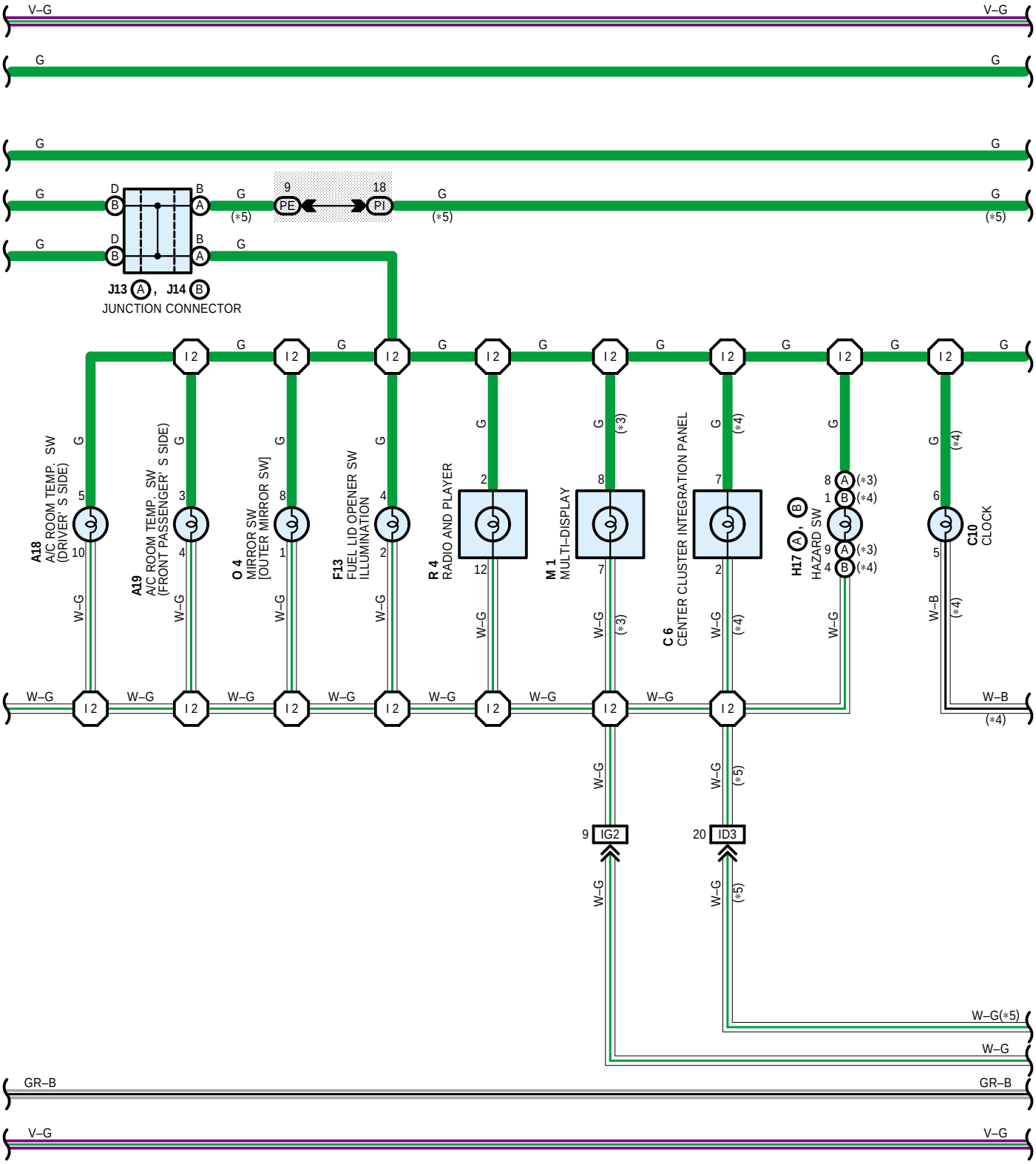
V–G
G
J13 A, J14 B
JUNCTION CONNECTOR
A18
A/C ROOM TEMP. SW
(DRIVER' S SIDE)
A19
A/C ROOM TEMP. SW
(FRONT PASSENGER' S SIDE)
O 4
MIRROR SW
[OUTER MIRROR SW]
F13
FUEL LID OPENER SW
ILLUMINATION
R 4
RADIO AND PLAYER
M 1
MULTI–DISPLAY
C 6
CENTER CLUSTER INTEGRATION PANEL
H17
HAZARD SW
C10
CLOCK
W–G
W–B
GR–B
IG2
ID3
W–G(*5)

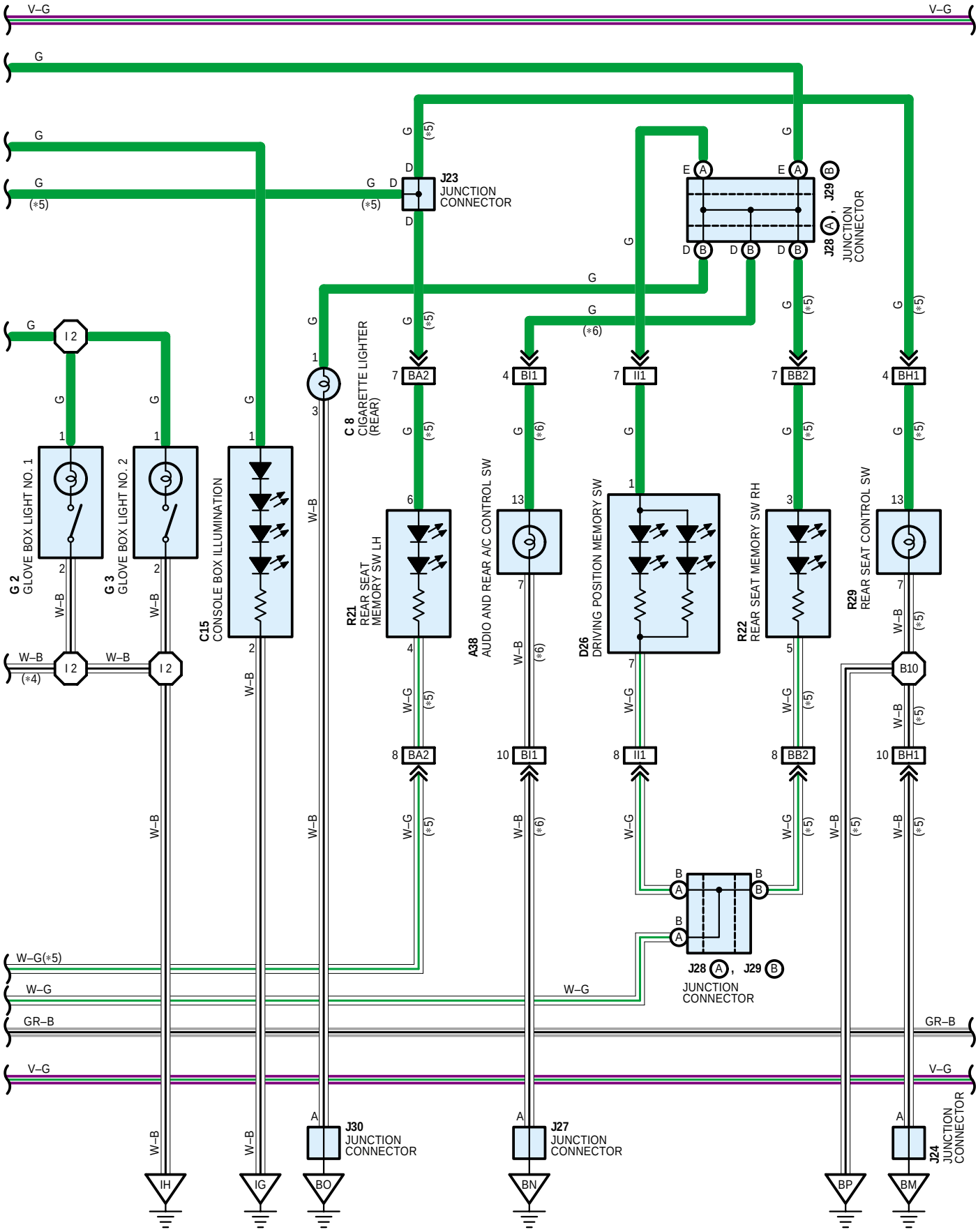
V–G
G
J23
JUNCTION
CONNECTOR
J28 A , J29 B
JUNCTION
CONNECTOR
C 8
CIGARETTE LIGHTER
(REAR)
G 2
GLOVE BOX LIGHT NO. 1
G 3
GLOVE BOX LIGHT NO. 2
C15
CONSOLE BOX ILLUMINATION
R21
REAR SEAT
MEMORY SW LH
A38
AUDIO AND REAR A/C CONTROL SW
D26
DRIVING POSITION MEMORY SW
R22
REAR SEAT MEMORY SW RH
R29
REAR SEAT CONTROL SW
BA2
BI1
II1
BB2
BH1
B10
I 2
W–B
W–G
GR–B
W–G(*5)
J30
JUNCTION
CONNECTOR
J27
JUNCTION
CONNECTOR
J24
JUNCTION
CONNECTOR
IH
IG
BO
BN
BP
BM

ILLUMINATION (RHD)

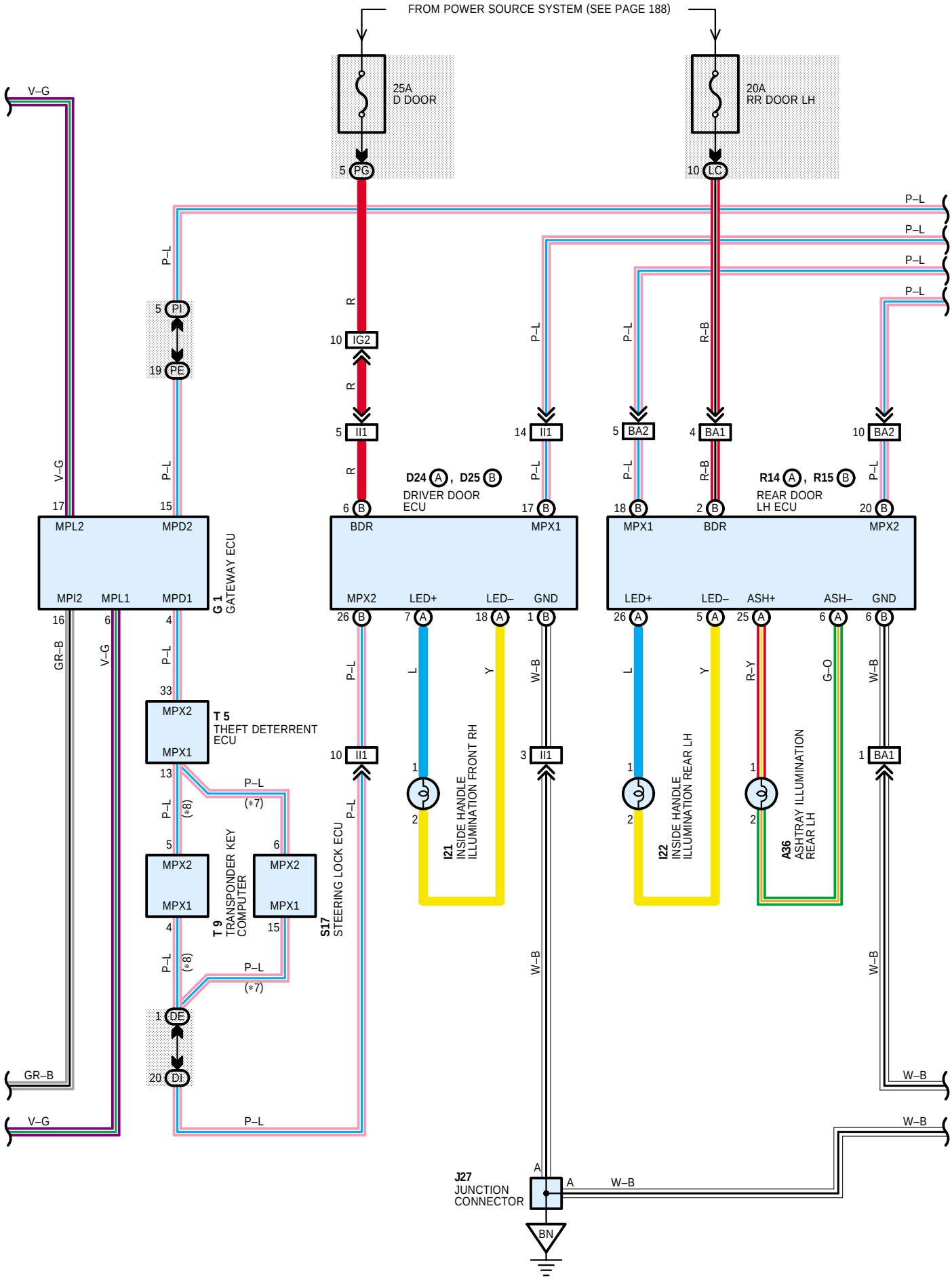

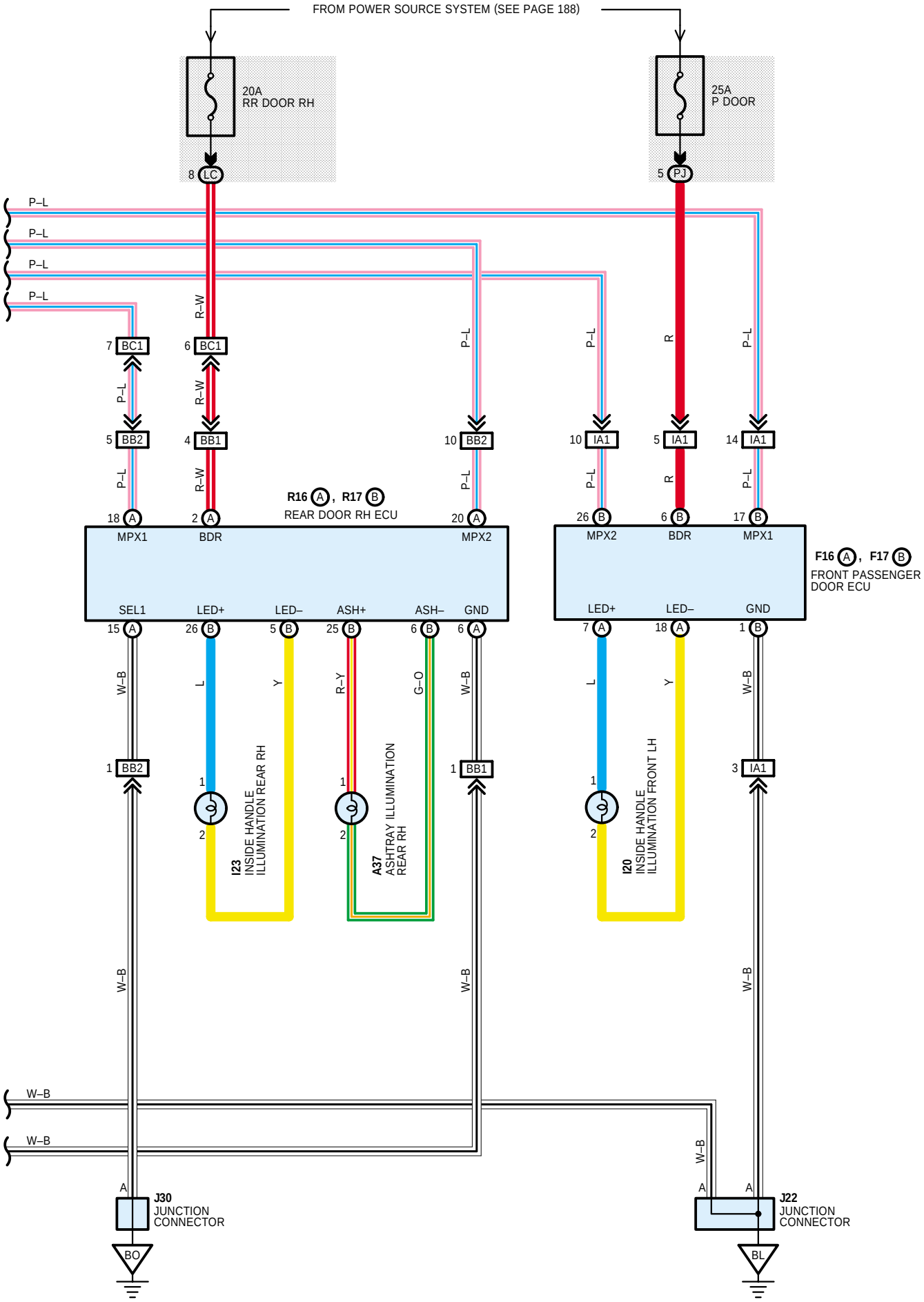
FROM POWER SOURCE SYSTEM (SEE PAGE 188)
20A
RR DOOR RH
25A
P DOOR
8 LC
5 PJ
P–L
R–W
R
7 BC1
6 BC1
5 BB2
4 BB1
10 BB2
10 IA1
5 IA1
14 IA1
R16 A , R17 B
REAR DOOR RH ECU
18 A
2 A
20 A
MPX1
BDR
MPX2
26 B
6 B
17 B
F16 A , F17 B
FRONT PASSENGER
DOOR ECU
SEL1
LED+
LED–
ASH+
ASH–
GND
15 A
26 B
5 B
25 B
6 B
6 A
7 A
18 A
1 B
W–B
L
Y
R–Y
G–O
1 BB2
1 BB1
3 IA1
I23
INSIDE HANDLE
ILLUMINATION REAR RH
A37
ASHTRAY ILLUMINATION
REAR RH
I20
INSIDE HANDLE
ILLUMINATION FRONT LH
J30
JUNCTION
CONNECTOR
J22
JUNCTION
CONNECTOR
BO
BL