INTERIOR LIGHT (LHD)

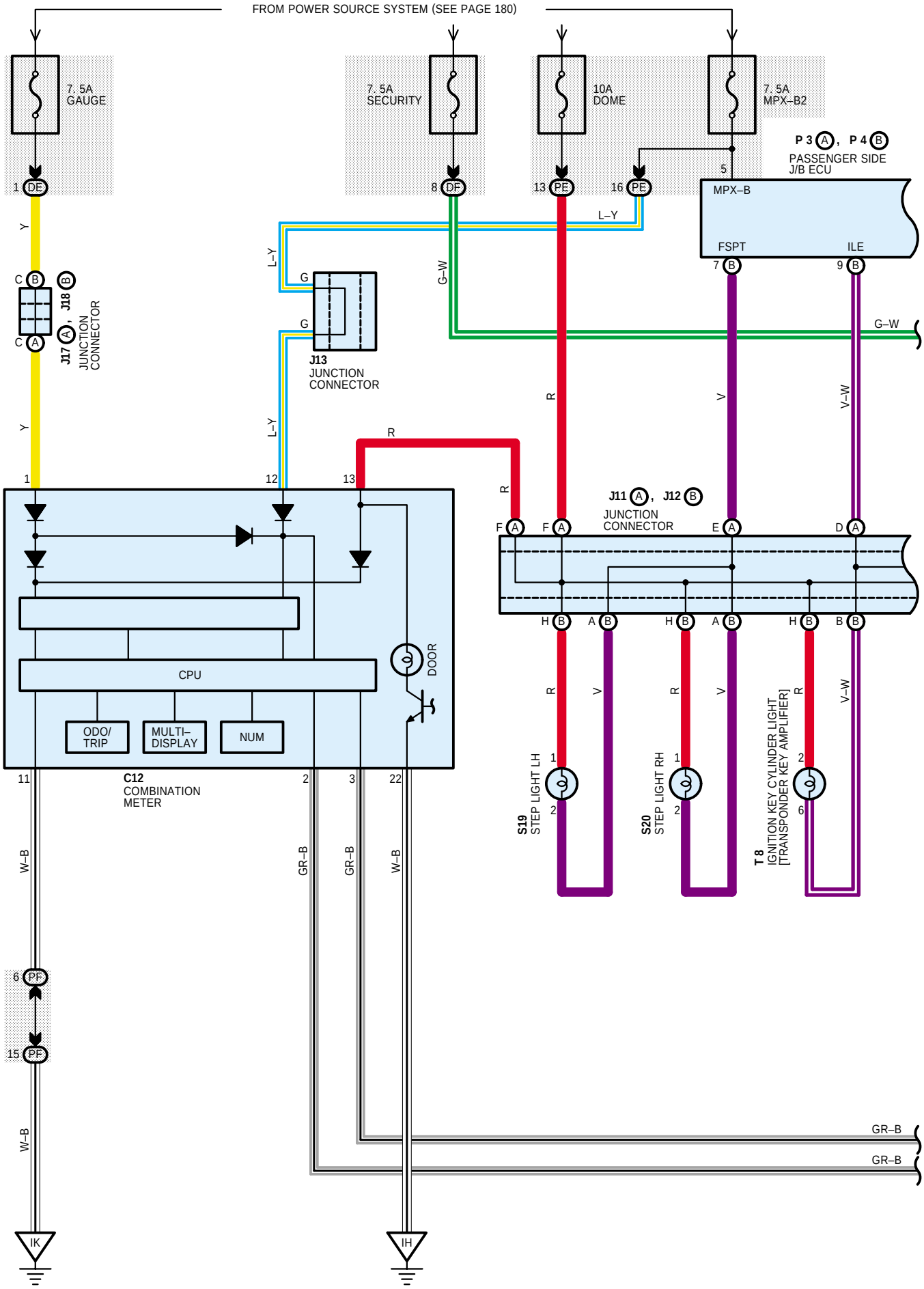

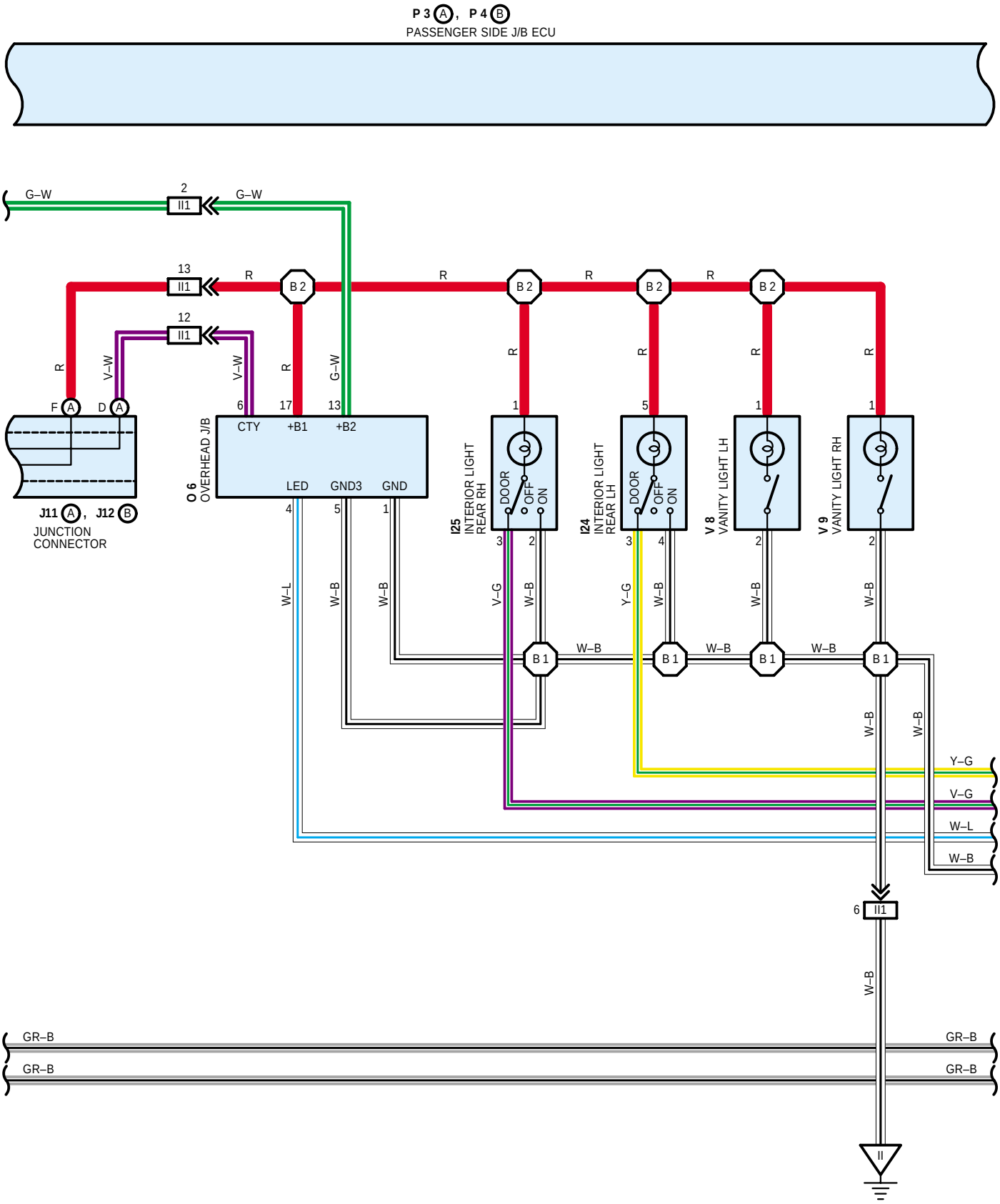
P 3 A, P 4 B
PASSENGER SIDE J/B ECU
G–W
2
II1
G–W
13
II1
R
B 2
R
B 2
R
B 2
R
B 2
12
II1
R
V–W
V–W
R
G–W
R
R
R
R
F A
D A
6
17
13
1
5
1
1
CTY
+B1
+B2
O 6
OVERHEAD J/B
LED
GND3
GND
J11 A, J12 B
JUNCTION
CONNECTOR
4
5
1
I25
INTERIOR LIGHT
REAR RH
DOOR
OFF
ON
I24
INTERIOR LIGHT
REAR LH
DOOR
OFF
ON
V 8
VANITY LIGHT LH
V 9
VANITY LIGHT RH
3
2
3
4
2
2
W–L
W–B
W–B
V–G
W–B
Y–G
W–B
W–B
W–B
B 1
W–B
B 1
W–B
B 1
W–B
B 1
W–B
W–B
Y–G
V–G
W–L
W–B
6
II1
W–B
GR–B
GR–B
GR–B
GR–B
II

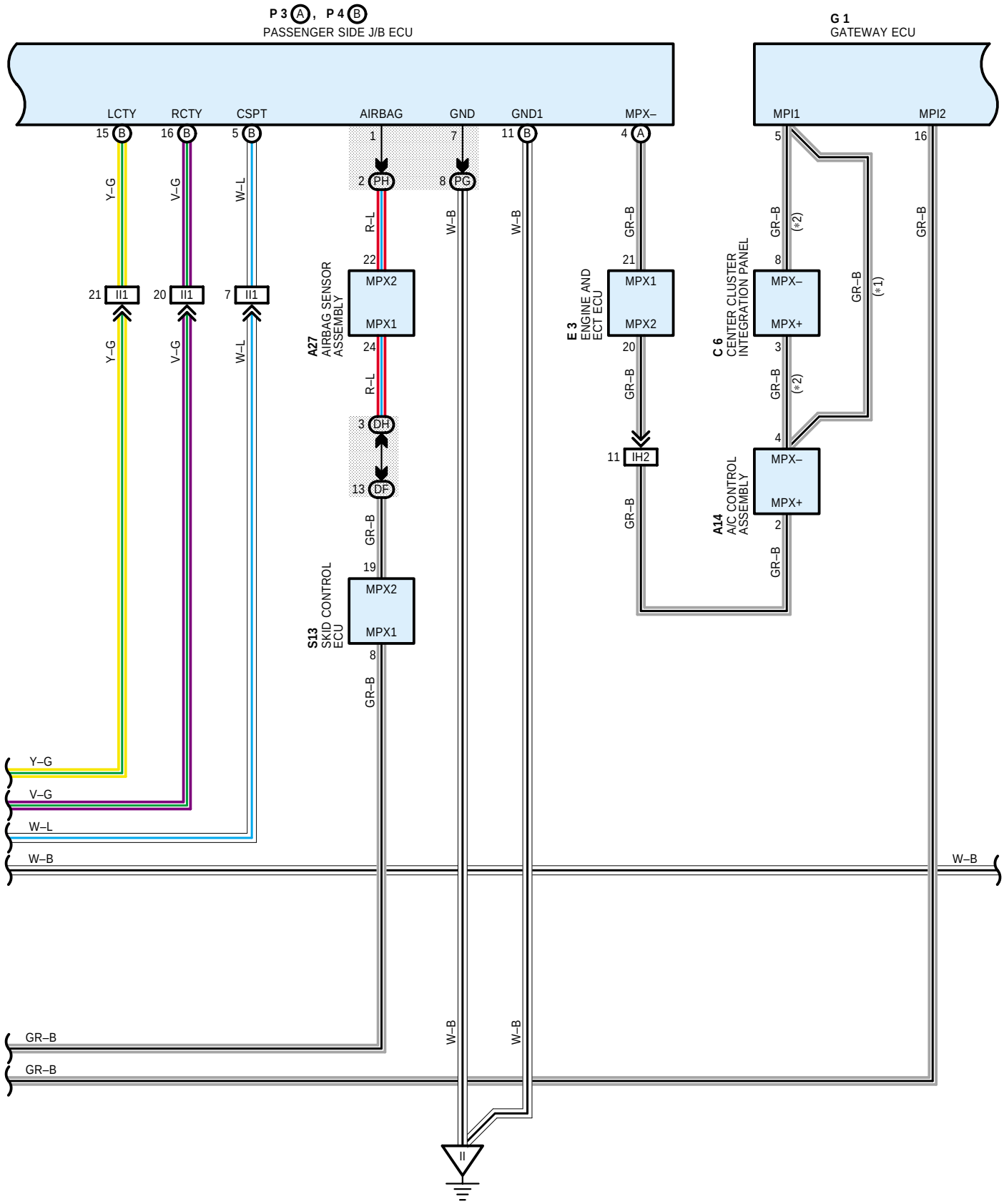
P 3 A, P 4 B
PASSENGER SIDE J/B ECU
G 1
GATEWAY ECU
LCTY
RCTY
CSPT
AIRBAG
GND
GND1
MPX–
MPI1
MPI2
A27
AIRBAG SENSOR ASSEMBLY
MPX2
MPX1
S13
SKID CONTROL ECU
E 3
ENGINE AND ECT ECU
C 6
CENTER CLUSTER INTEGRATION PANEL
MPX+
A14
A/C CONTROL ASSEMBLY
II1
IH2
Y–G
V–G
W–L
W–B
R–L
GR–B
(*1)
(*2)

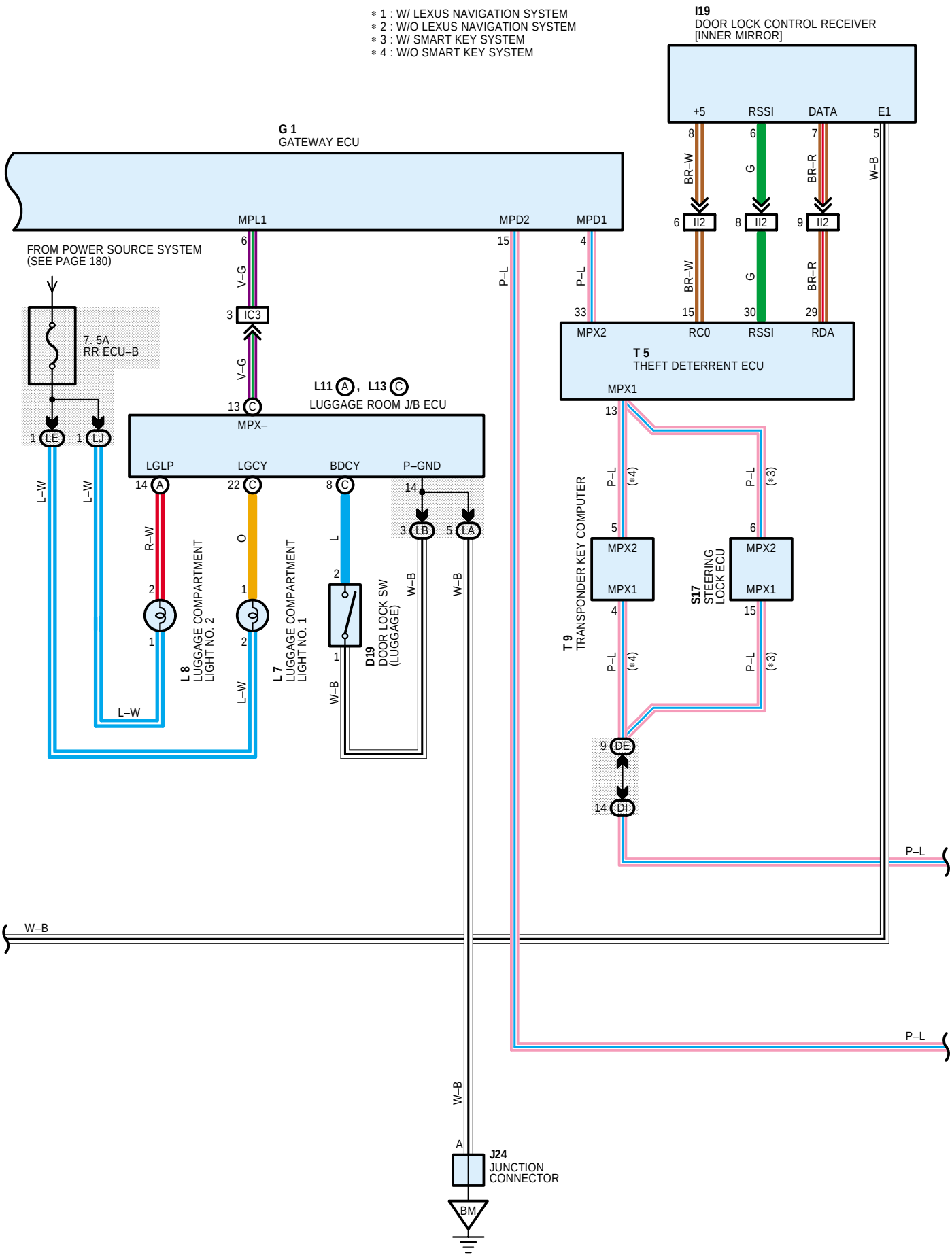
* 1 : W/ LEXUS NAVIGATION SYSTEM
* 2 : W/O LEXUS NAVIGATION SYSTEM
* 3 : W/ SMART KEY SYSTEM
* 4 : W/O SMART KEY SYSTEM
I19
DOOR LOCK CONTROL RECEIVER
[INNER MIRROR]
+5
RSSI
DATA
E1
G 1
GATEWAY ECU
MPL1
MPD2
MPD1
FROM POWER SOURCE SYSTEM
(SEE PAGE 180)
7. 5A
RR ECU–B
IC3
II2
MPX2
RC0
RSSI
RDA
T 5
THEFT DETERRENT ECU
MPX1
L11 A, L13 C
LUGGAGE ROOM J/B ECU
MPX–
LGLP
LGCY
BDCY
P–GND
LE
LJ
LB
LA
L 8
LUGGAGE COMPARTMENT
LIGHT NO. 2
L 7
LUGGAGE COMPARTMENT
LIGHT NO. 1
D19
DOOR LOCK SW
(LUGGAGE)
T 9
TRANSPONDER KEY COMPUTER
S17
STEERING
LOCK ECU
DE
DI
J24
JUNCTION
CONNECTOR
BM
V–G
BR–W
G
BR–R
W–B
P–L
L–W
R–W
O
L
(*4)
(*3)

INTERIOR LIGHT (LHD)

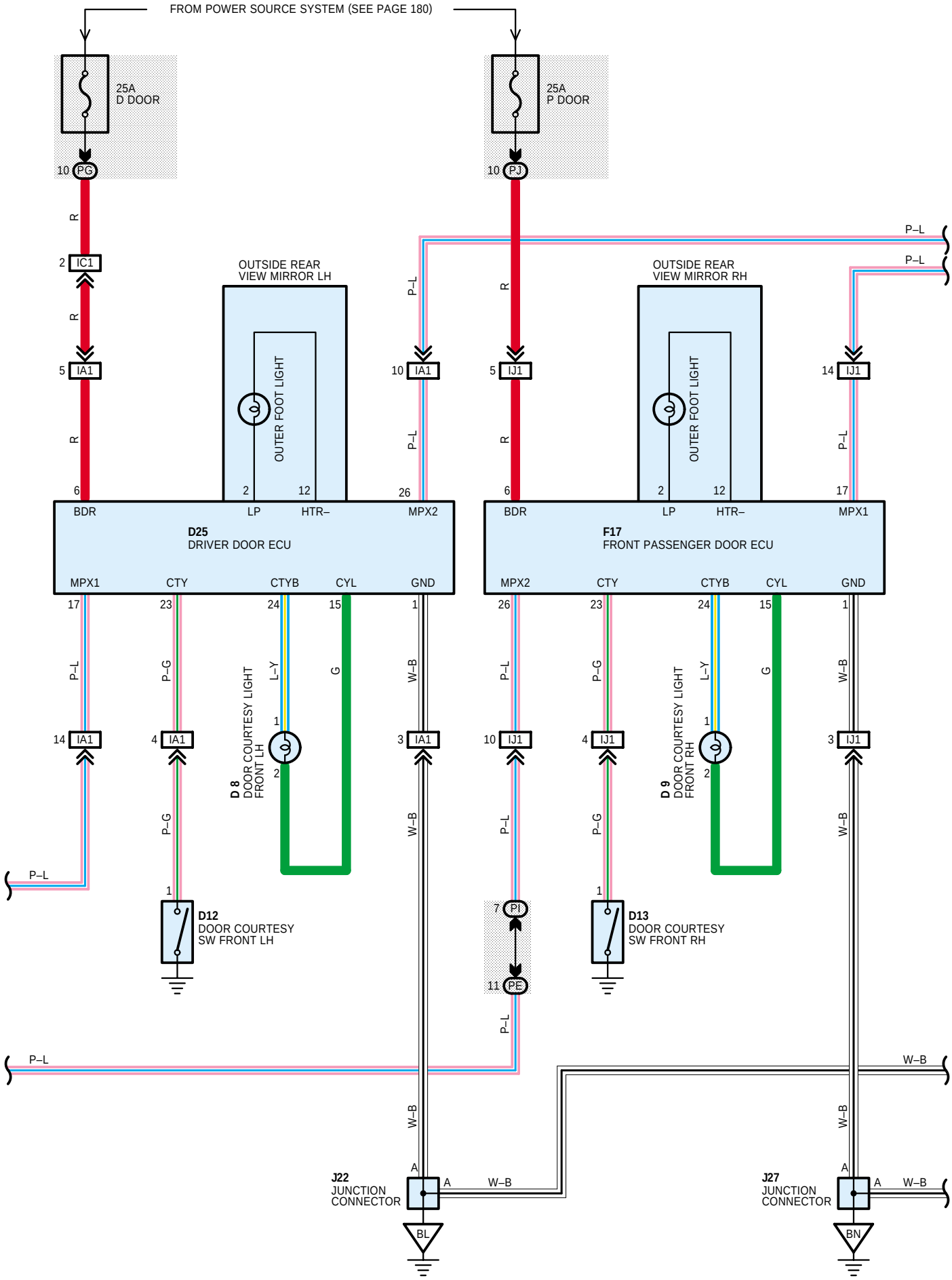

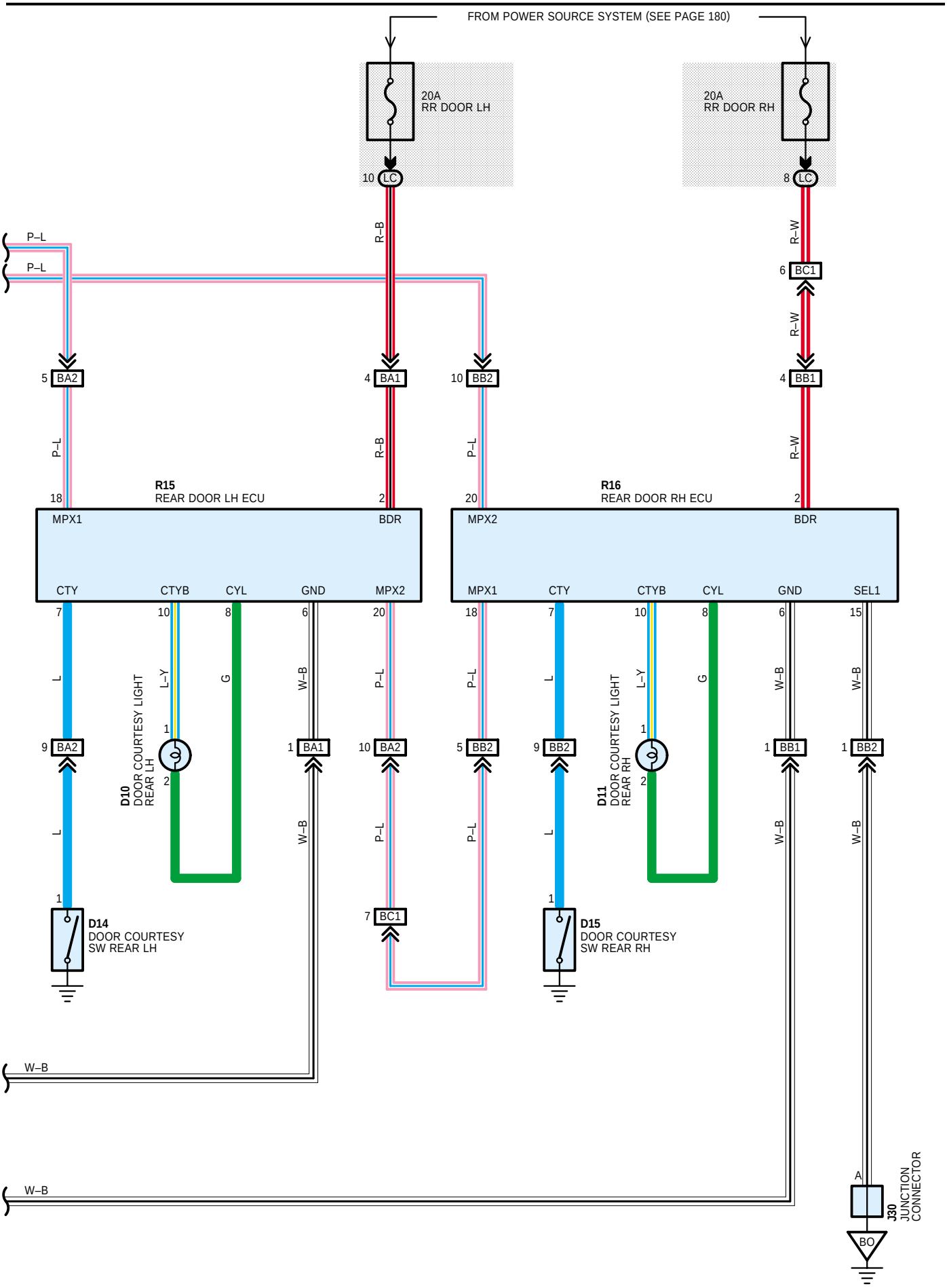
FROM POWER SOURCE SYSTEM (SEE PAGE 180)
20A
RR DOOR LH
20A
RR DOOR RH
10 LC
8 LC
R–B
R–W
P–L
P–L
6 BC1
R–W
5 BA2
4 BA1
10 BB2
4 BB1
P–L
R–B
P–L
R–W
18
R15
REAR DOOR LH ECU
2
20
R16
REAR DOOR RH ECU
2
MPX1
BDR
MPX2
BDR
CTY
CTYB
CYL
GND
MPX2
MPX1
CTY
CTYB
CYL
GND
SEL1
7
10
8
6
20
18
7
10
8
6
15
L
L–Y
G
W–B
P–L
P–L
L
L–Y
G
W–B
W–B
9 BA2
1 BA1
10 BA2
5 BB2
9 BB2
1 BB1
1 BB2
D10
DOOR COURTESY LIGHT
REAR LH
D11
DOOR COURTESY LIGHT
REAR RH
L
W–B
P–L
P–L
L
W–B
W–B
1
7 BC1
1
D14
DOOR COURTESY
SW REAR LH
D15
DOOR COURTESY
SW REAR RH
W–B
W–B
A
J30
JUNCTION
CONNECTOR
BO