HEADLIGHT BEAM LEVEL CONTROL (RHD)

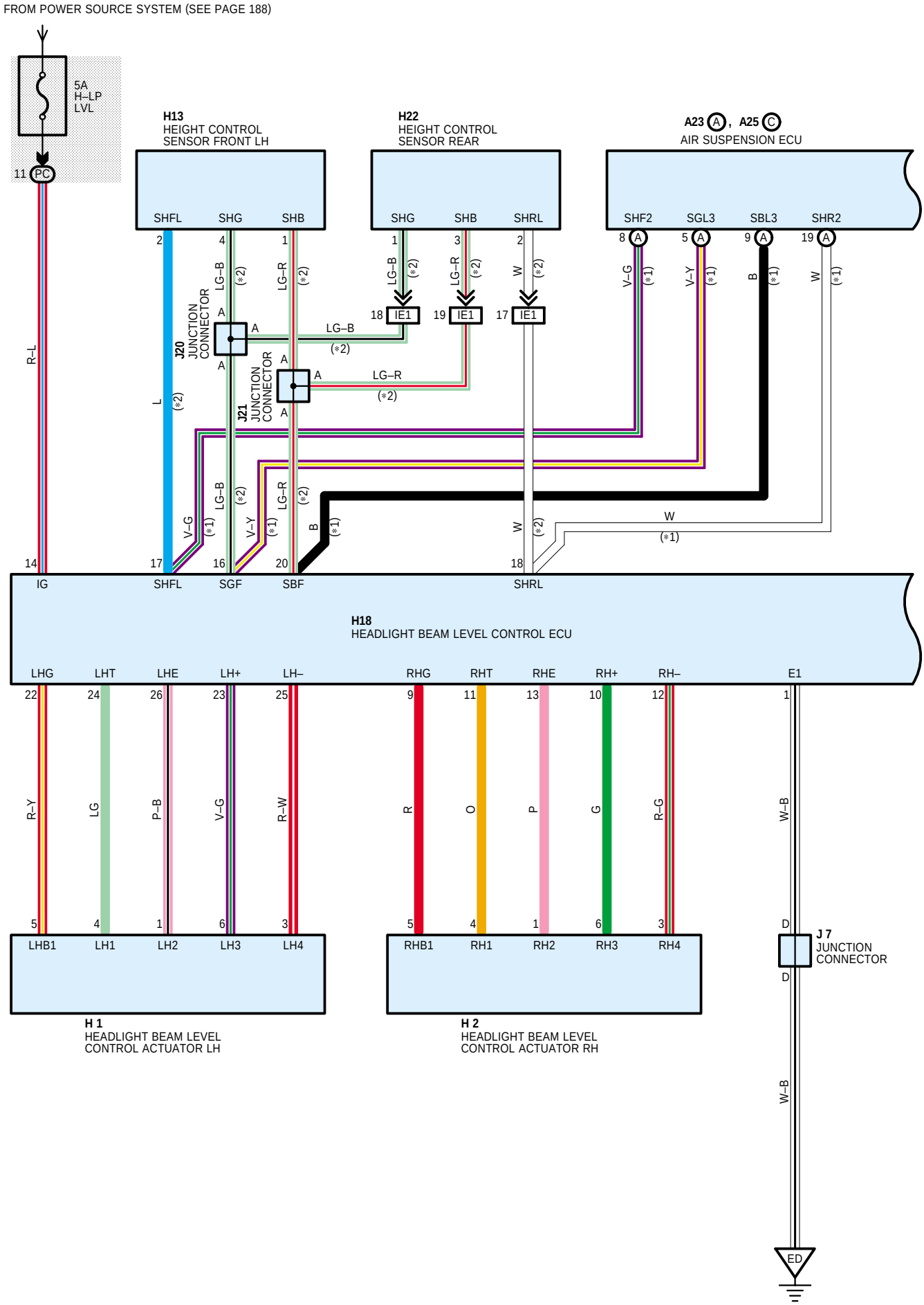

＊1 : W/ ELECTRONIC MODULATED AIR SUSPENSION
＊2 : W/O ELECTRONIC MODULATED AIR SUSPENSION

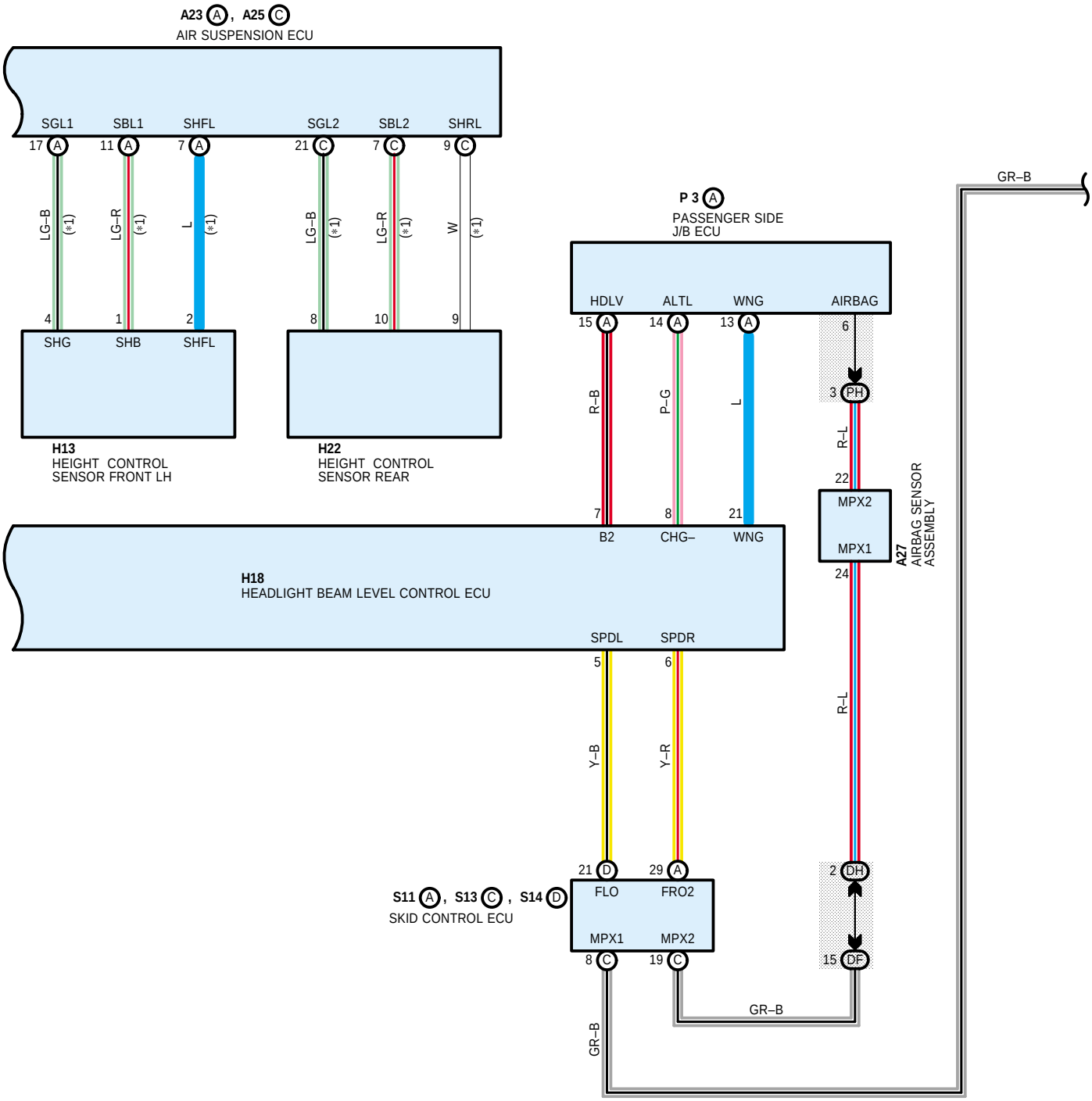
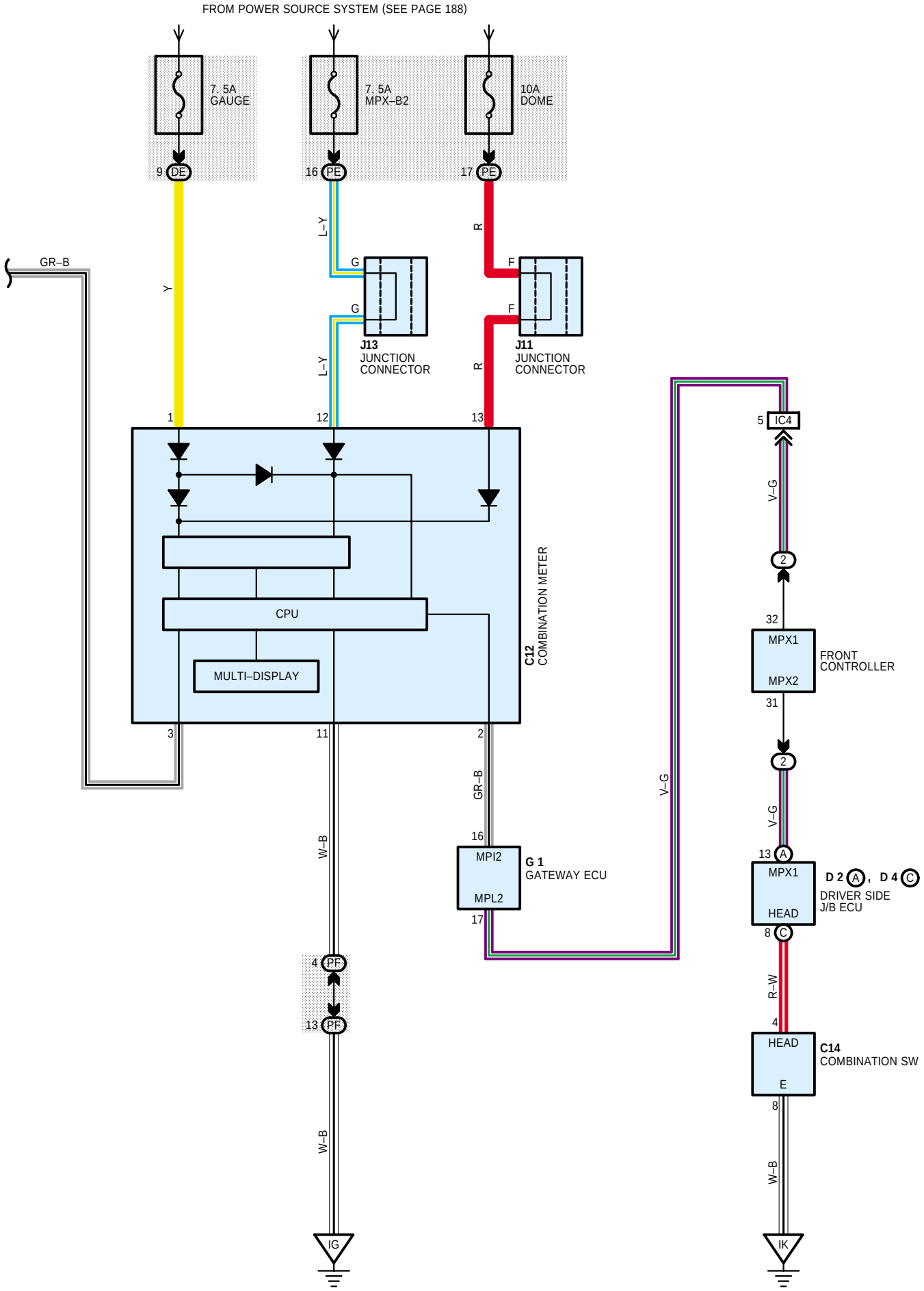
HEADLIGHT BEAM LEVEL CONTROL (RHD)