FRONT FOG LIGHT (RHD)

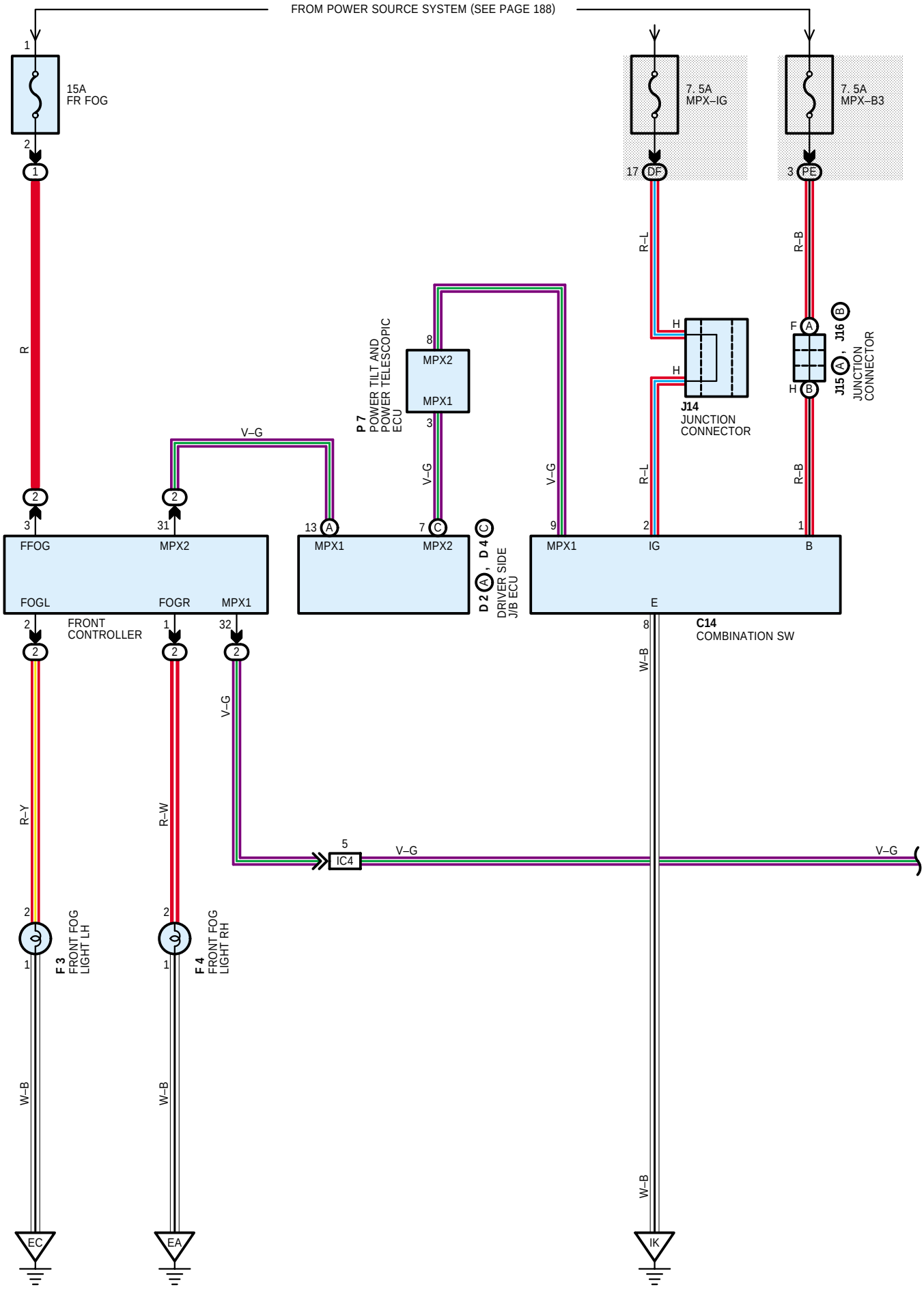

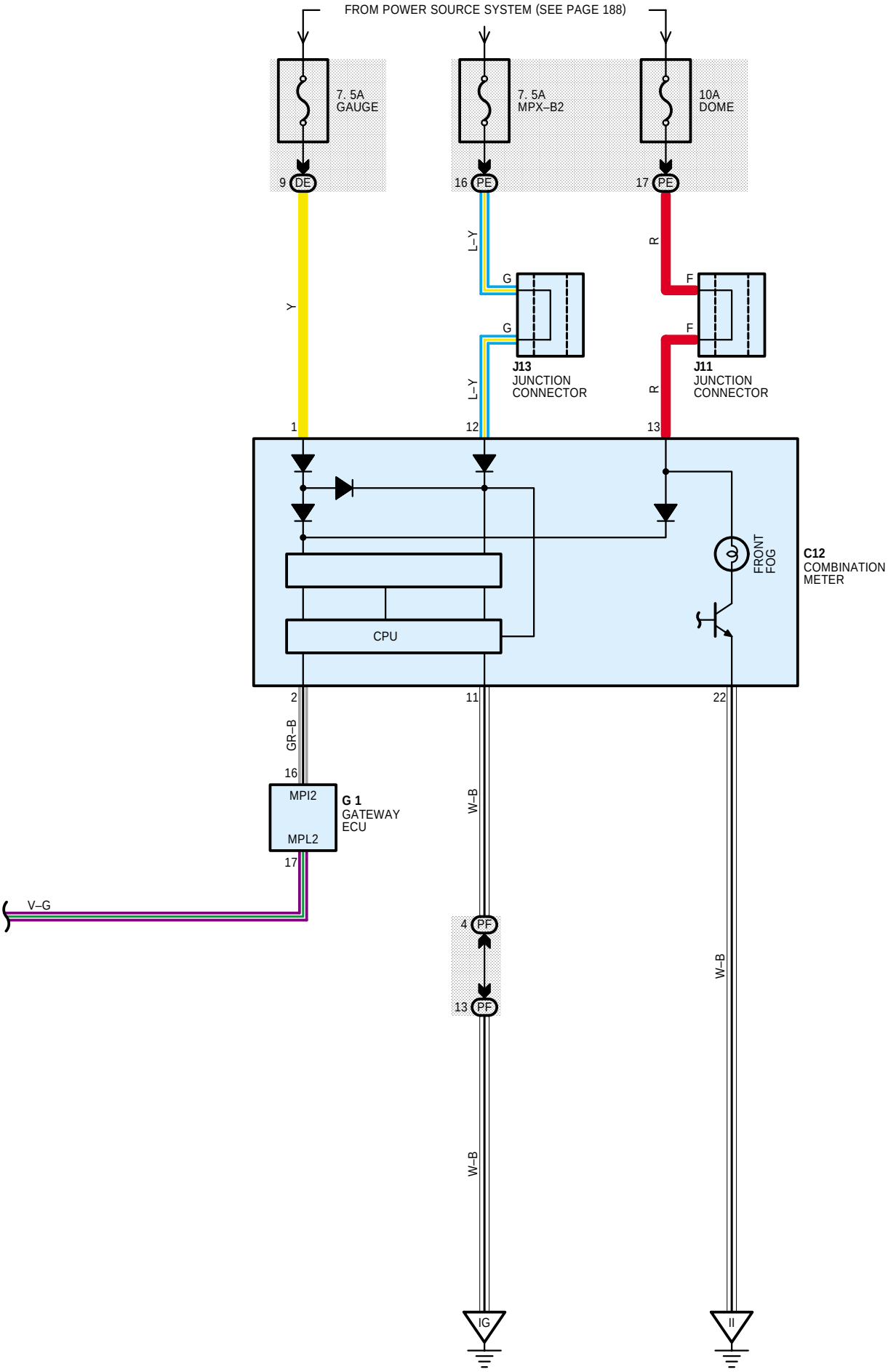
FROM POWER SOURCE SYSTEM (SEE PAGE 188)
7. 5A
GAUGE
7. 5A
MPX–B2
10A
DOME
9 DE
16 PE
17 PE
L–Y
R
Y
G
F
J13
JUNCTION
CONNECTOR
J11
JUNCTION
CONNECTOR
1
12
13
FRONT
FOG
C12
COMBINATION
METER
CPU
2
11
22
GR–B
16
MPI2
MPL2
17
G 1
GATEWAY
ECU
W–B
V–G
4 PF
13 PF
IG
II