ELECTRONIC MODULATED AIR SUSPENSION (RHD)

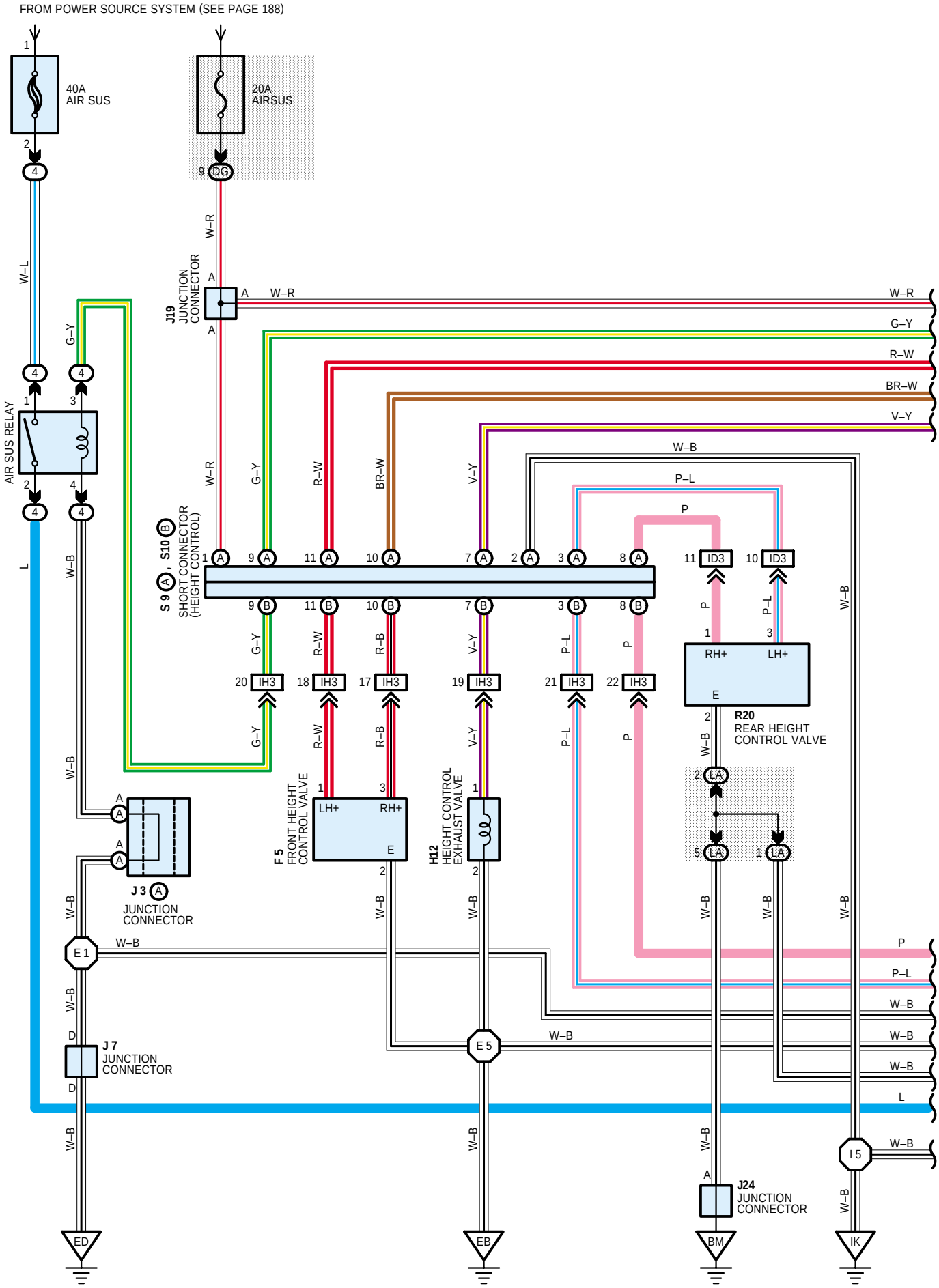

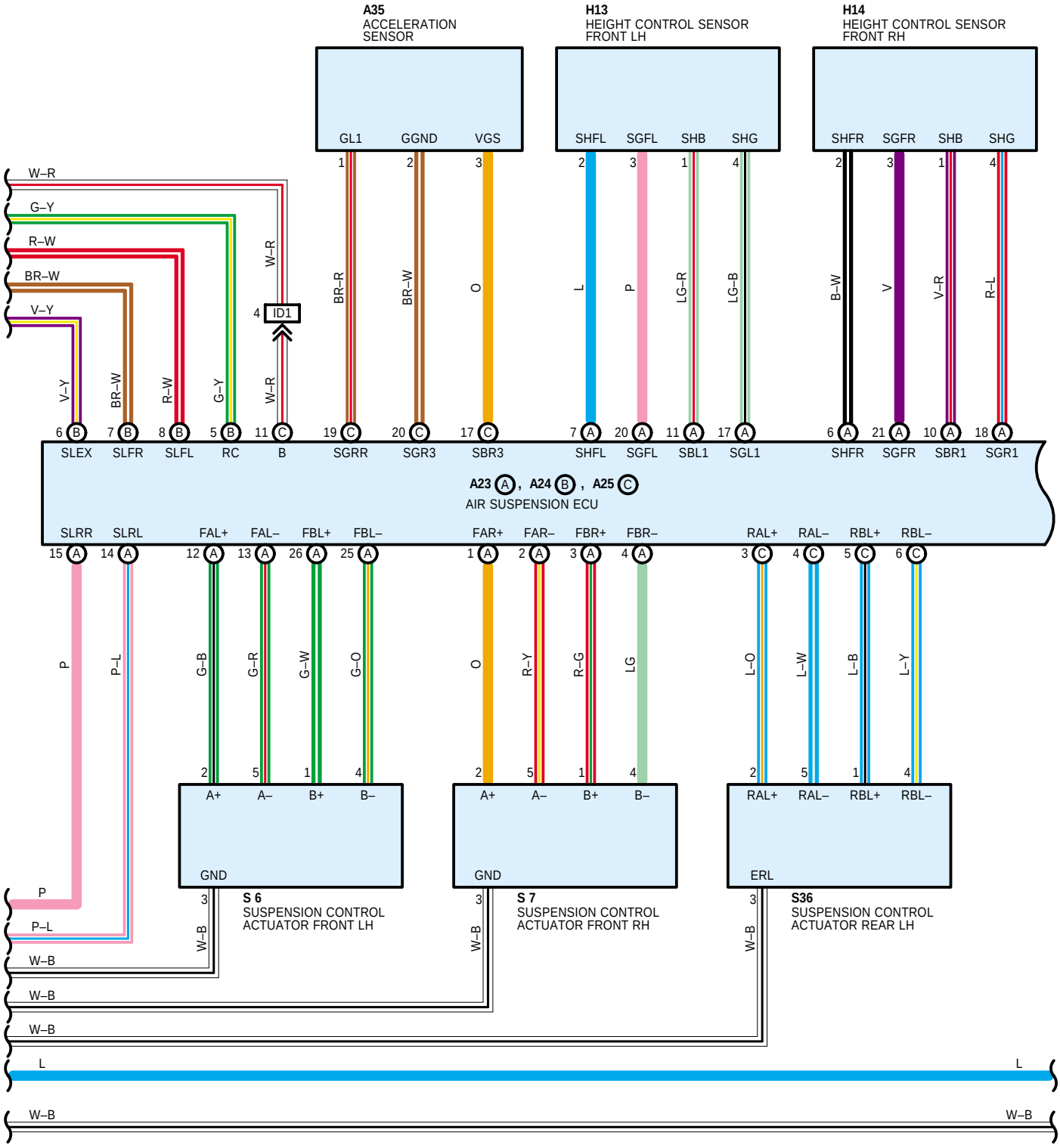
A35
ACCELERATION SENSOR
GL1
GGND
VGS
H13
HEIGHT CONTROL SENSOR FRONT LH
SHFL
SGFL
SHB
SHG
H14
HEIGHT CONTROL SENSOR FRONT RH
SHFR
SGFR
SHB
SHG
W–R
G–Y
R–W
BR–W
V–Y
ID1
BR–R
BR–W
O
L
P
LG–R
LG–B
B–W
V
V–R
R–L
SLEX
SLFR
SLFL
RC
B
SGRR
SGR3
SBR3
SHFL
SGFL
SBL1
SGL1
SHFR
SGFR
SBR1
SGR1
A23 A , A24 B , A25 C
AIR SUSPENSION ECU
SLRR
SLRL
FAL+
FAL–
FBL+
FBL–
FAR+
FAR–
FBR+
FBR–
RAL+
RAL–
RBL+
RBL–
P
P–L
G–B
G–R
G–W
G–O
R–Y
R–G
LG
L–O
L–W
L–B
L–Y
A+
A–
B+
B–
GND
S 6
SUSPENSION CONTROL ACTUATOR FRONT LH
S 7
SUSPENSION CONTROL ACTUATOR FRONT RH
RAL+
RAL–
RBL+
RBL–
ERL
S36
SUSPENSION CONTROL ACTUATOR REAR LH
W–B
L

ELECTRONIC MODULATED AIR SUSPENSION (RHD)

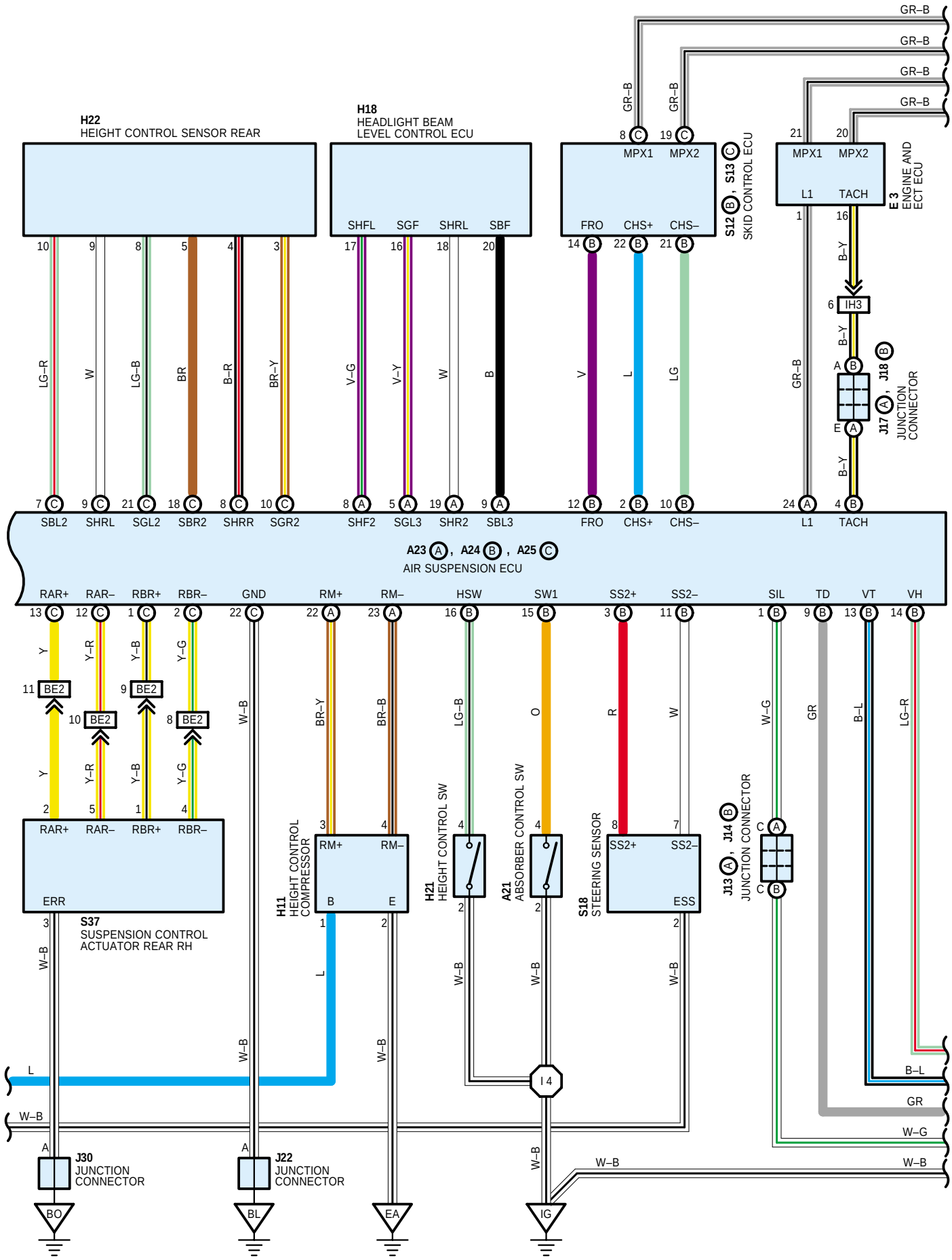

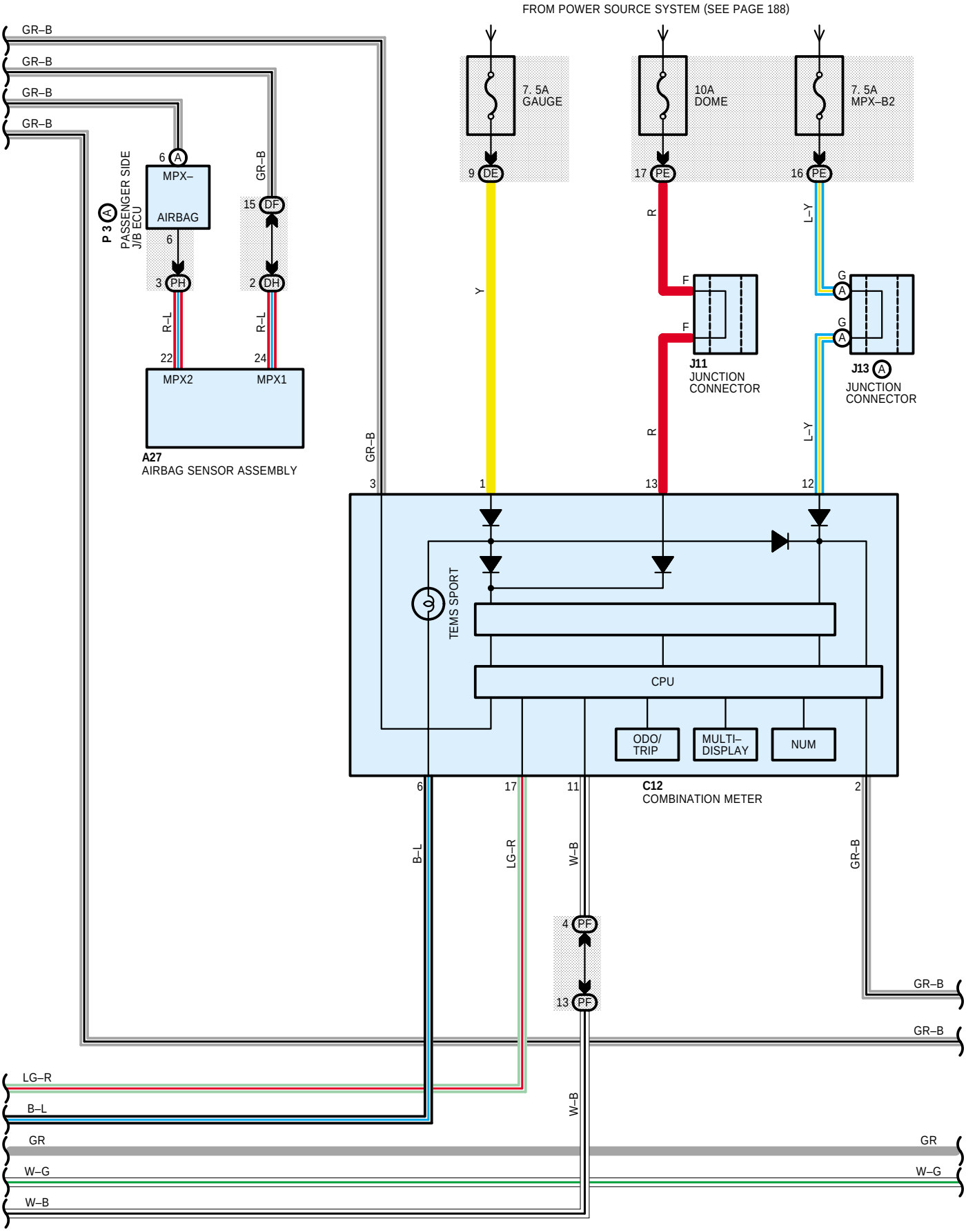
FROM POWER SOURCE SYSTEM (SEE PAGE 188)
GR–B
GR–B
GR–B
GR–B
7. 5A
GAUGE
10A
DOME
7. 5A
MPX–B2
9 DE
17 PE
16 PE
P 3 A
PASSENGER SIDE
J/B ECU
6 A
MPX–
AIRBAG
6
3 PH
15 DF
2 DH
R–L
R–L
22
24
MPX2
MPX1
A27
AIRBAG SENSOR ASSEMBLY
Y
R
L–Y
F
F
J11
JUNCTION
CONNECTOR
G A
G A
J13 A
JUNCTION
CONNECTOR
GR–B
3
1
13
12
TEMS SPORT
CPU
ODO/
TRIP
MULTI–
DISPLAY
NUM
6
17
11
2
C12
COMBINATION METER
B–L
LG–R
W–B
GR–B
4 PF
13 PF
GR–B
GR–B
LG–R
B–L
W–B
GR
GR
W–G
W–G
W–B

ELECTRONIC MODULATED AIR SUSPENSION (RHD)

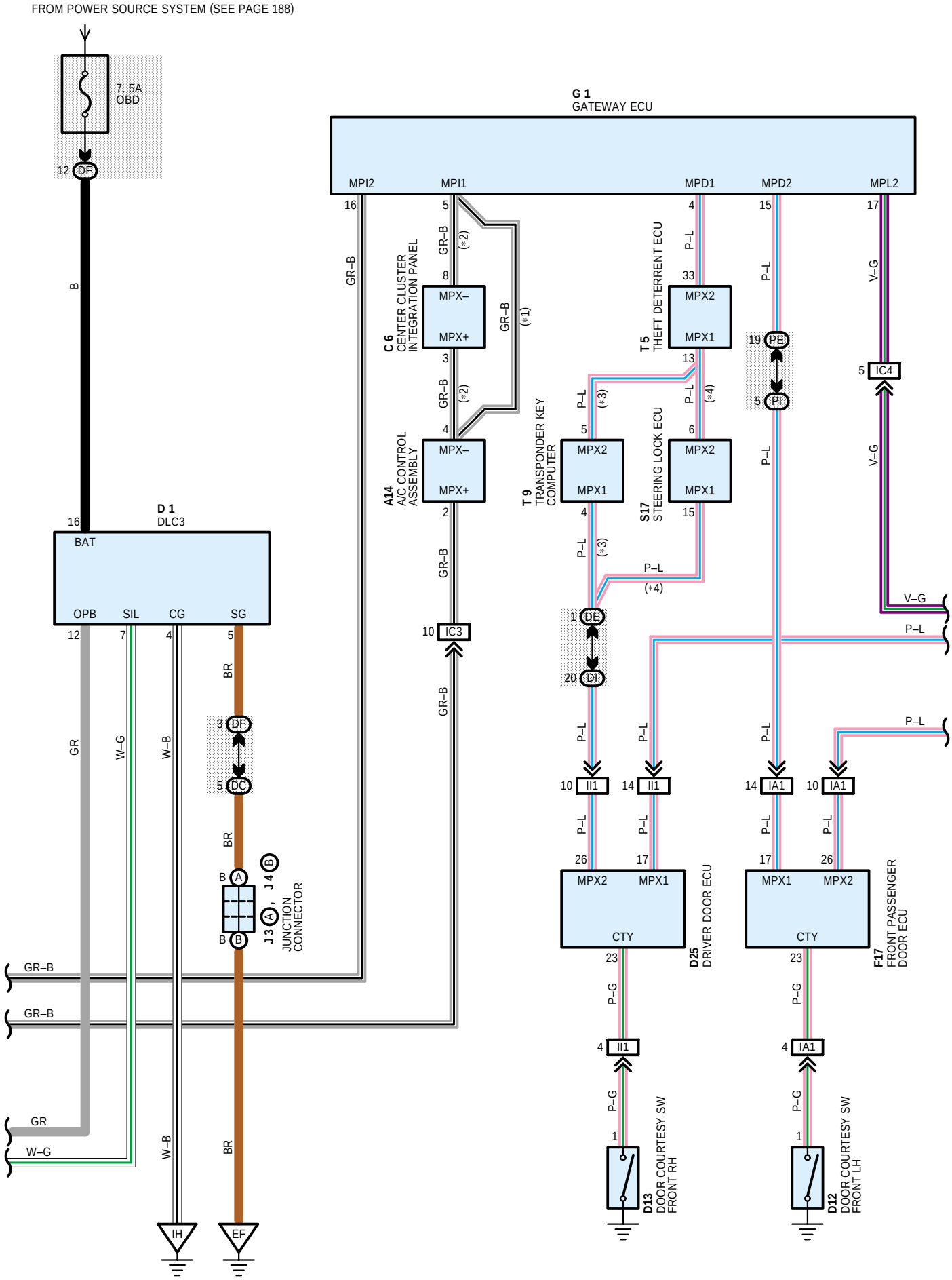

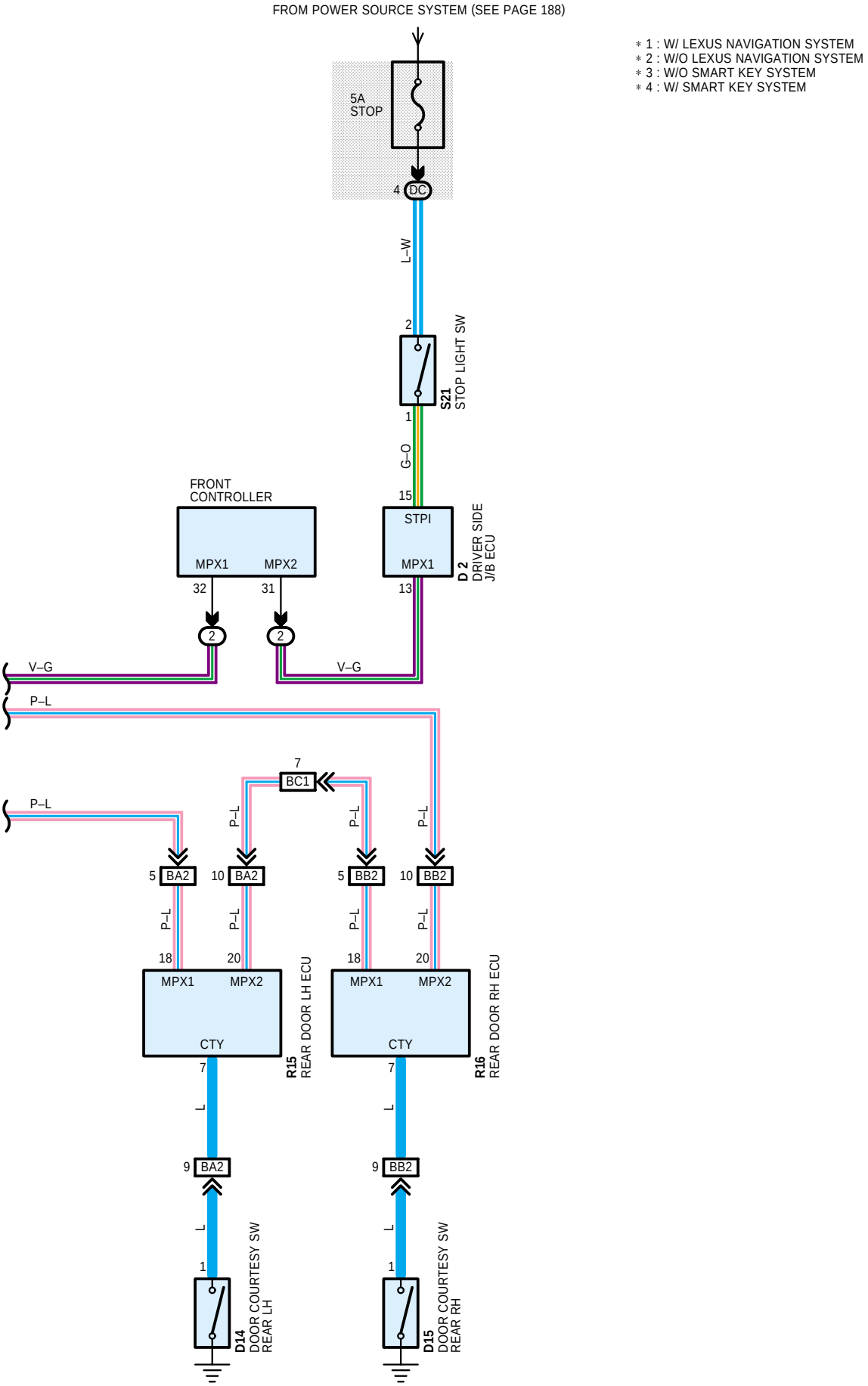
FROM POWER SOURCE SYSTEM (SEE PAGE 188)
* 1 : W/ LEXUS NAVIGATION SYSTEM
* 2 : W/O LEXUS NAVIGATION SYSTEM
* 3 : W/O SMART KEY SYSTEM
* 4 : W/ SMART KEY SYSTEM
5A
STOP
4
DC
L–W
2
S21
STOP LIGHT SW
1
G–O
15
FRONT
CONTROLLER
MPX1
MPX2
32
31
STPI
MPX1
13
D 2
DRIVER SIDE
J/B ECU
2
2
V–G
V–G
P–L
7
BC1
P–L
P–L
P–L
P–L
5
BA2
10
BA2
5
BB2
10
BB2
P–L
P–L
P–L
P–L
18
20
18
20
MPX1
MPX2
CTY
R15
REAR DOOR LH ECU
MPX1
MPX2
CTY
R16
REAR DOOR RH ECU
7
7
L
L
9
BA2
9
BB2
L
L
1
1
D14
DOOR COURTESY SW
REAR LH
D15
DOOR COURTESY SW
REAR RH