ENGINE IMMOBILISER AND STEERING LOCK SYSTEM

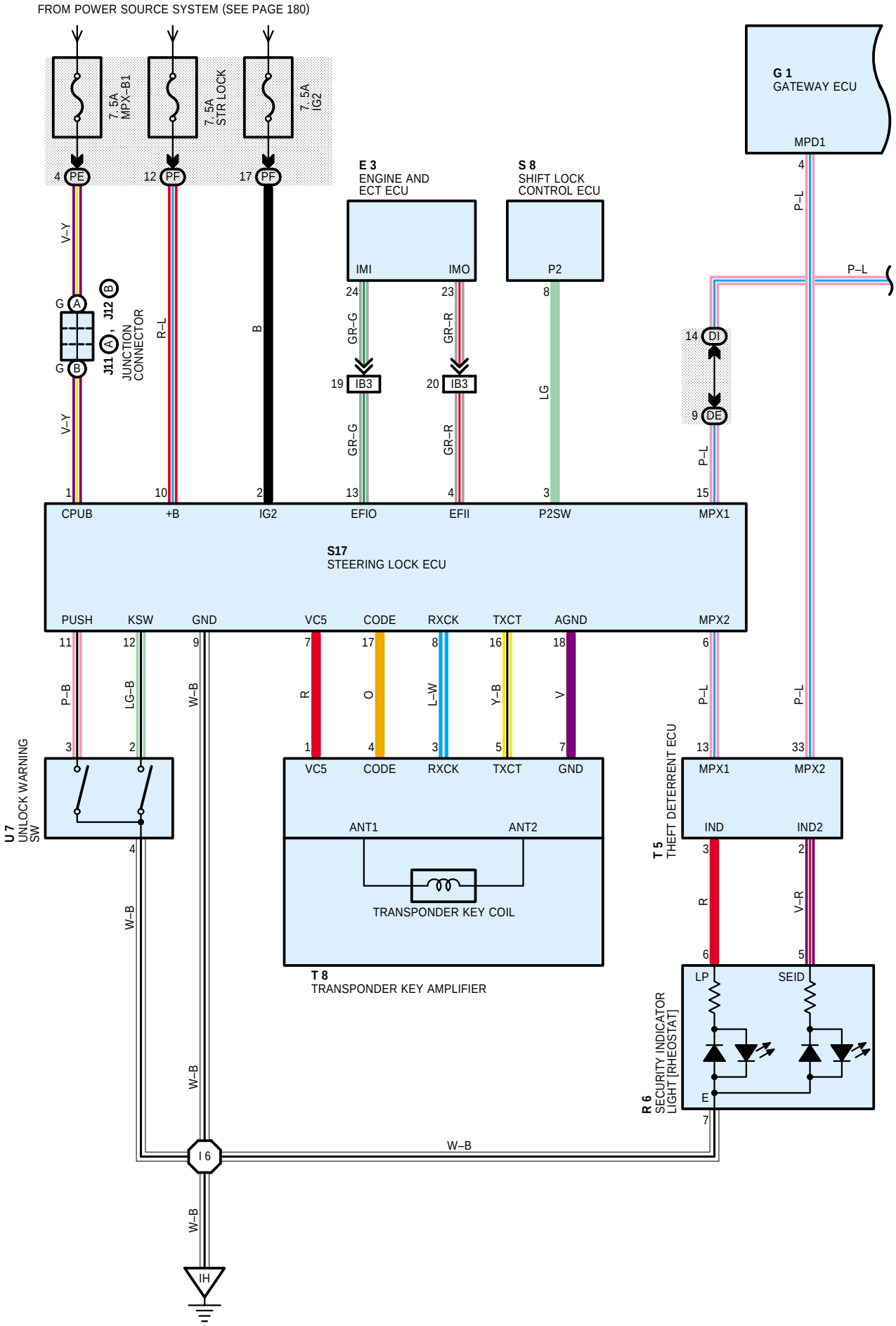
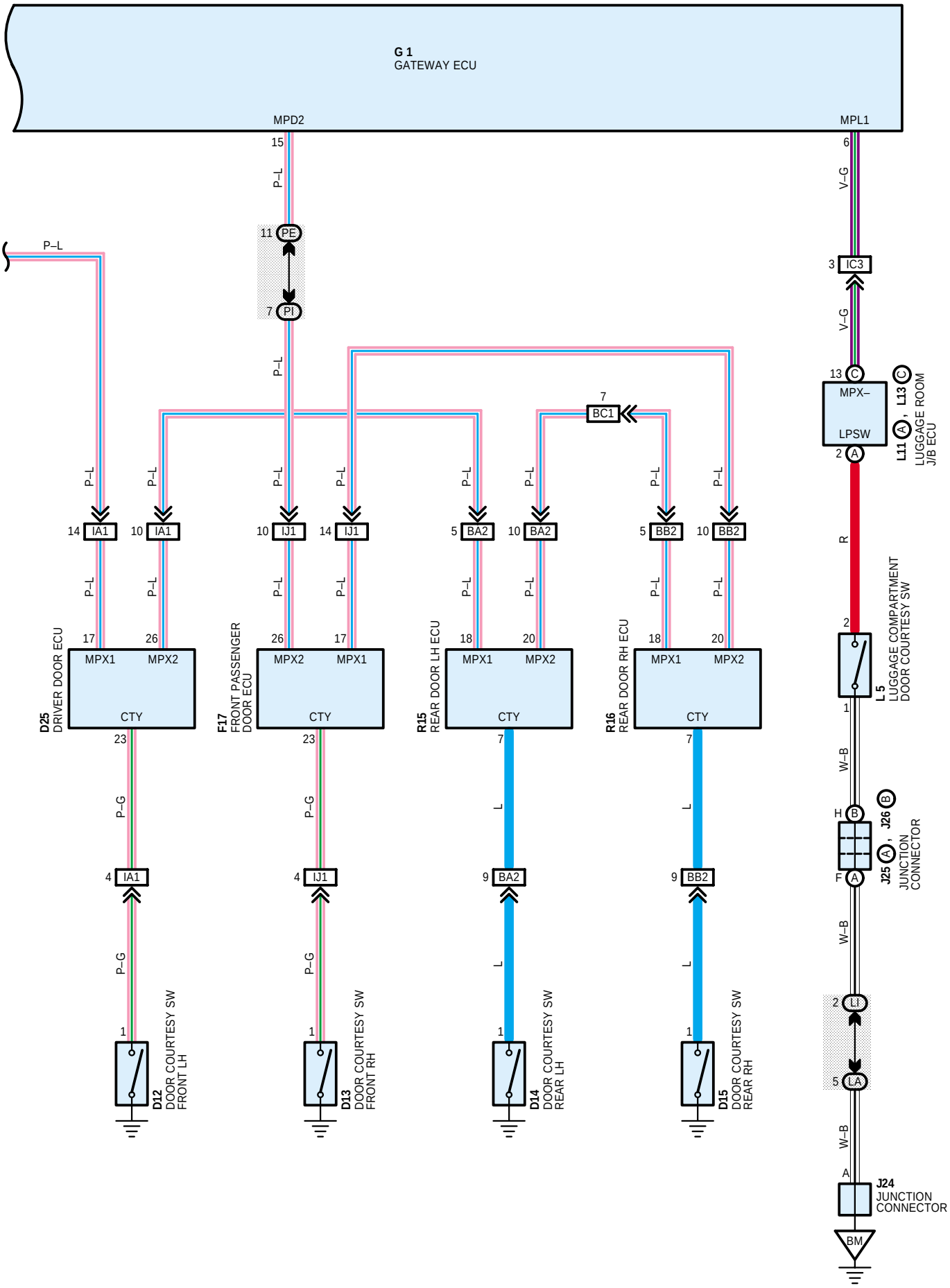
(LHD w/ SMART KEY SYSTEM)