ENGINE IMMOBILISER SYSTEM (RHD w/o SMART KEY SYSTEM)

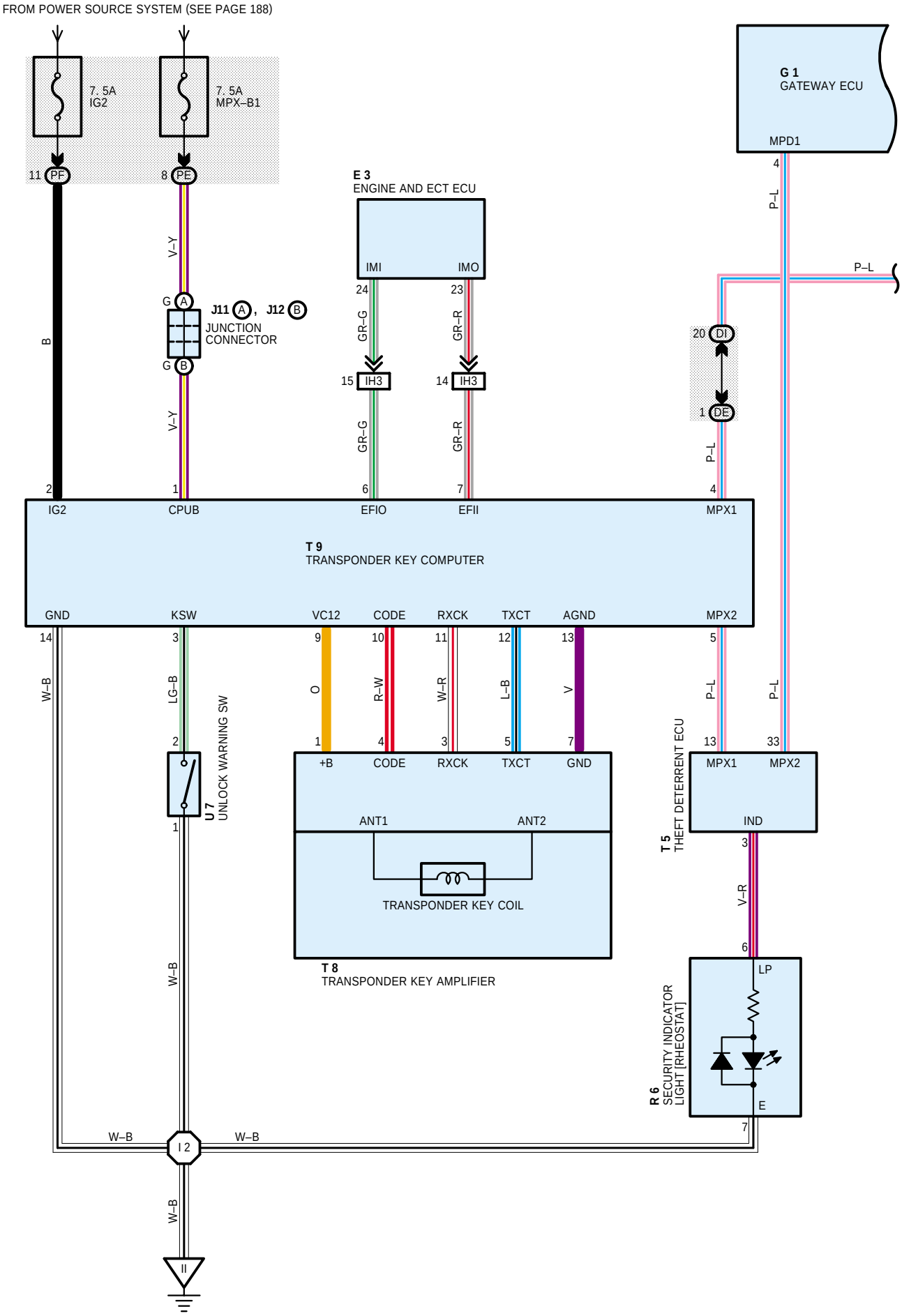

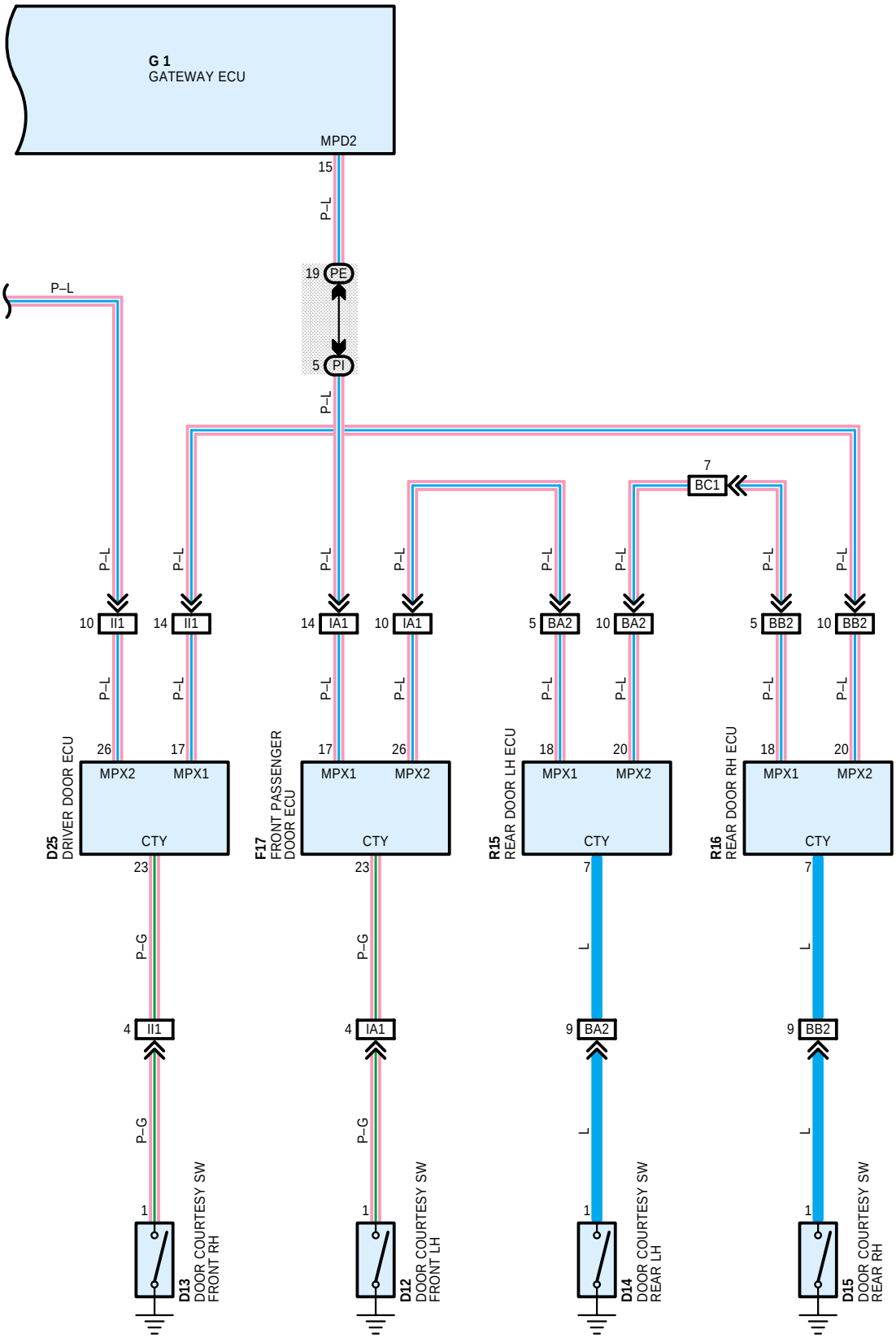
G 1
GATEWAY ECU
MPD2
15
P–L
19 PE
5 PI
P–L
P–L
7
BC1
10 II1
14 II1
14 IA1
10 IA1
5 BA2
10 BA2
5 BB2
10 BB2
26
17
MPX2
MPX1
CTY
D25
DRIVER DOOR ECU
F17
FRONT PASSENGER DOOR ECU
R15
REAR DOOR LH ECU
R16
REAR DOOR RH ECU
23
P–G
4 II1
4 IA1
18
20
7
L
9 BA2
9 BB2
1
D13
DOOR COURTESY SW FRONT RH
D12
DOOR COURTESY SW FRONT LH
D14
DOOR COURTESY SW REAR LH
D15
DOOR COURTESY SW REAR RH