ECT AND A/T INDICATOR (RHD)

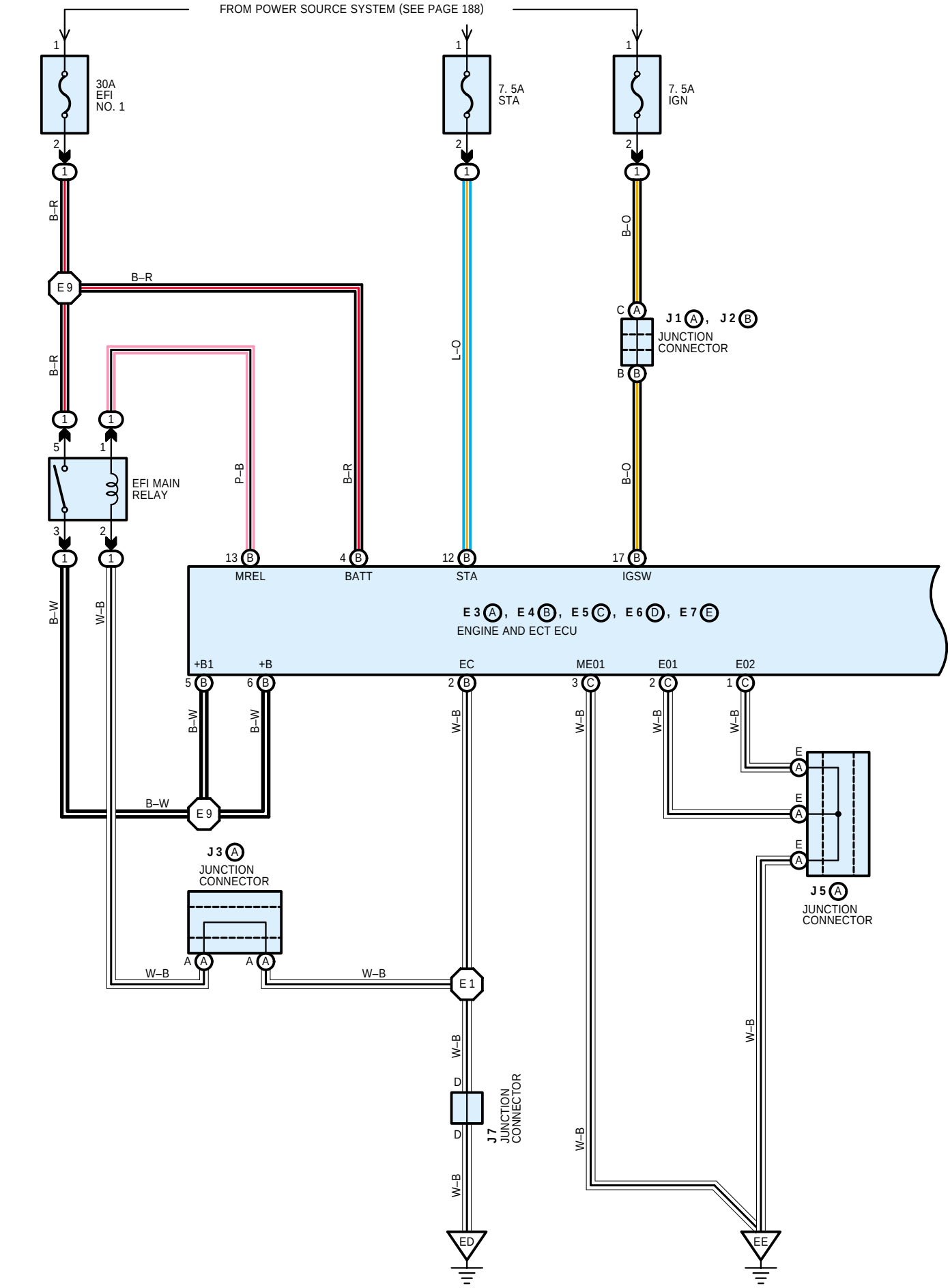

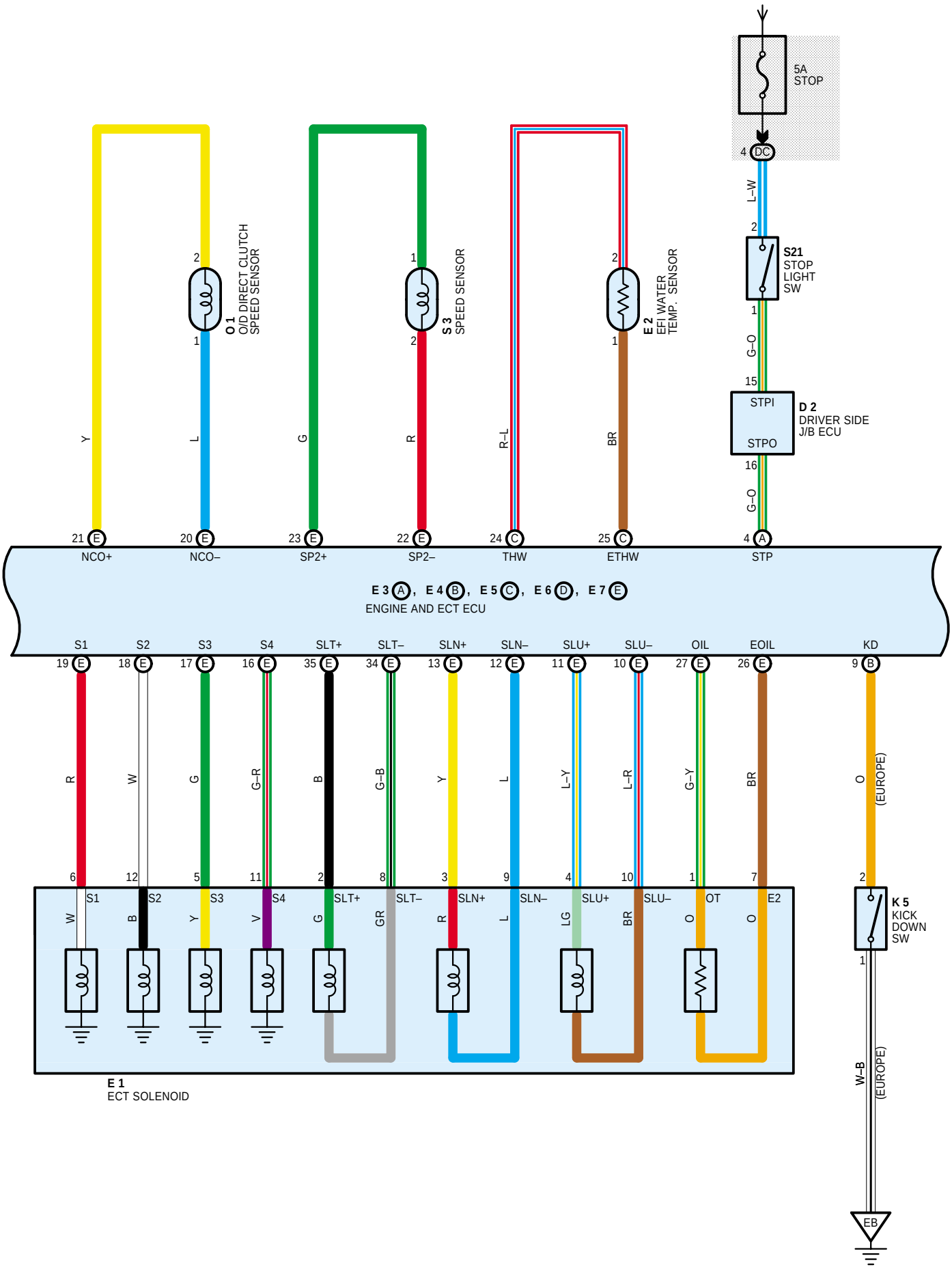
FROM POWER SOURCE SYSTEM (SEE PAGE 188)
5A
STOP
4 DC
L–W
2
S21
STOP
LIGHT
SW
1
G–O
15
STPI
STPO
D 2
DRIVER SIDE
J/B ECU
16
G–O
4 A
STP
O 1
O/D DIRECT CLUTCH
SPEED SENSOR
S 3
SPEED SENSOR
E 2
EFI WATER
TEMP. SENSOR
Y
L
G
R
R–L
BR
21 E
NCO+
20 E
NCO–
23 E
SP2+
22 E
SP2–
24 C
THW
25 C
ETHW
E 3 A, E 4 B, E 5 C, E 6 D, E 7 E
ENGINE AND ECT ECU
S1
S2
S3
S4
SLT+
SLT–
SLN+
SLN–
SLU+
SLU–
OIL
EOIL
KD
19 E
18 E
17 E
16 E
35 E
34 E
13 E
12 E
11 E
10 E
27 E
26 E
9 B
R
W
G
G–R
B
G–B
Y
L
L–Y
L–R
G–Y
BR
O
(EUROPE)
6
12
5
11
2
8
3
9
4
10
1
7
2
S1
S2
S3
S4
SLT+
SLT–
SLN+
SLN–
SLU+
SLU–
OT
E2
W
B
Y
V
G
GR
R
L
LG
BR
O
O
K 5
KICK
DOWN
SW
1
W–B
(EUROPE)
EB
E 1
ECT SOLENOID

ECT AND A/T INDICATOR (RHD)

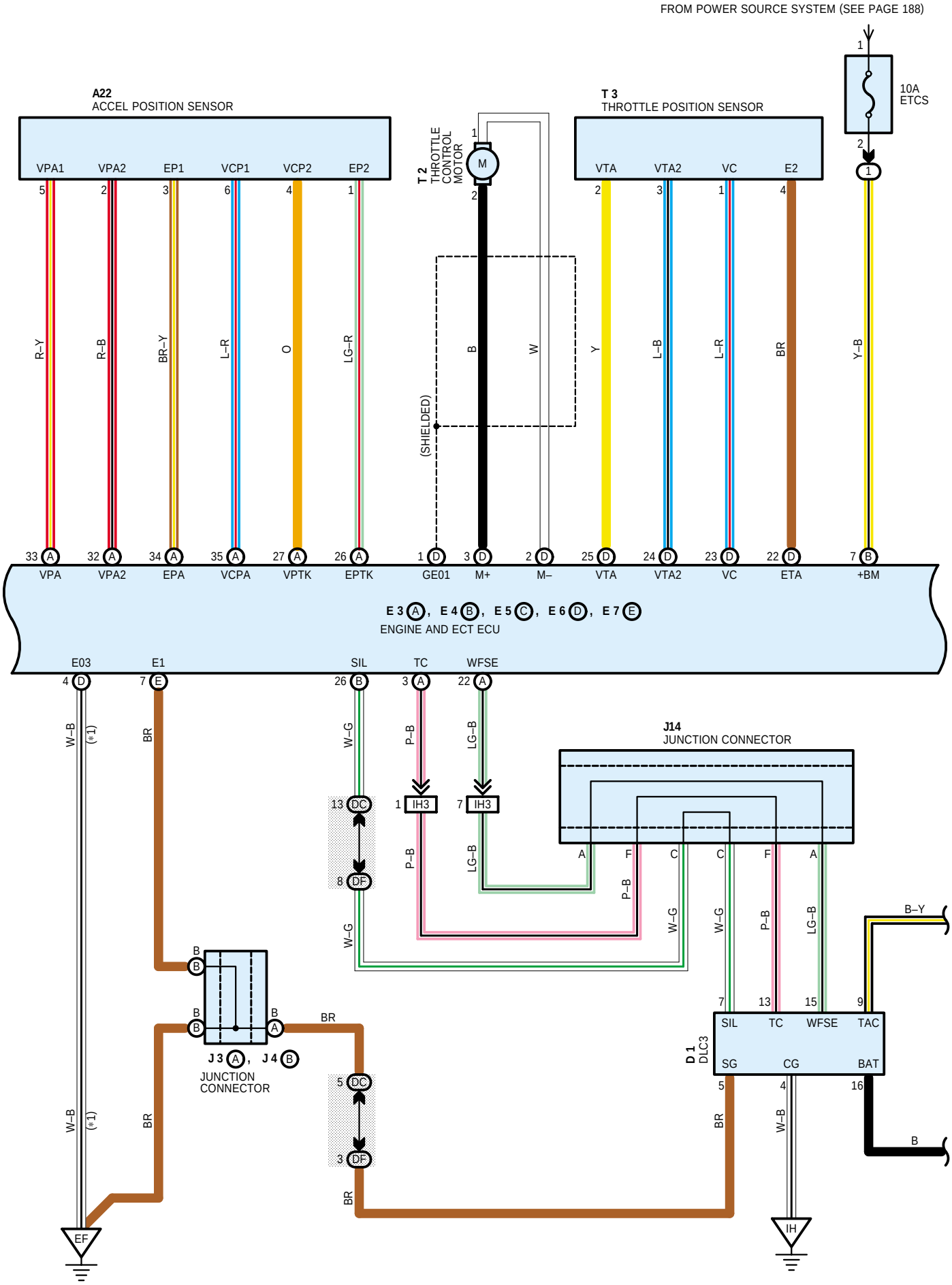

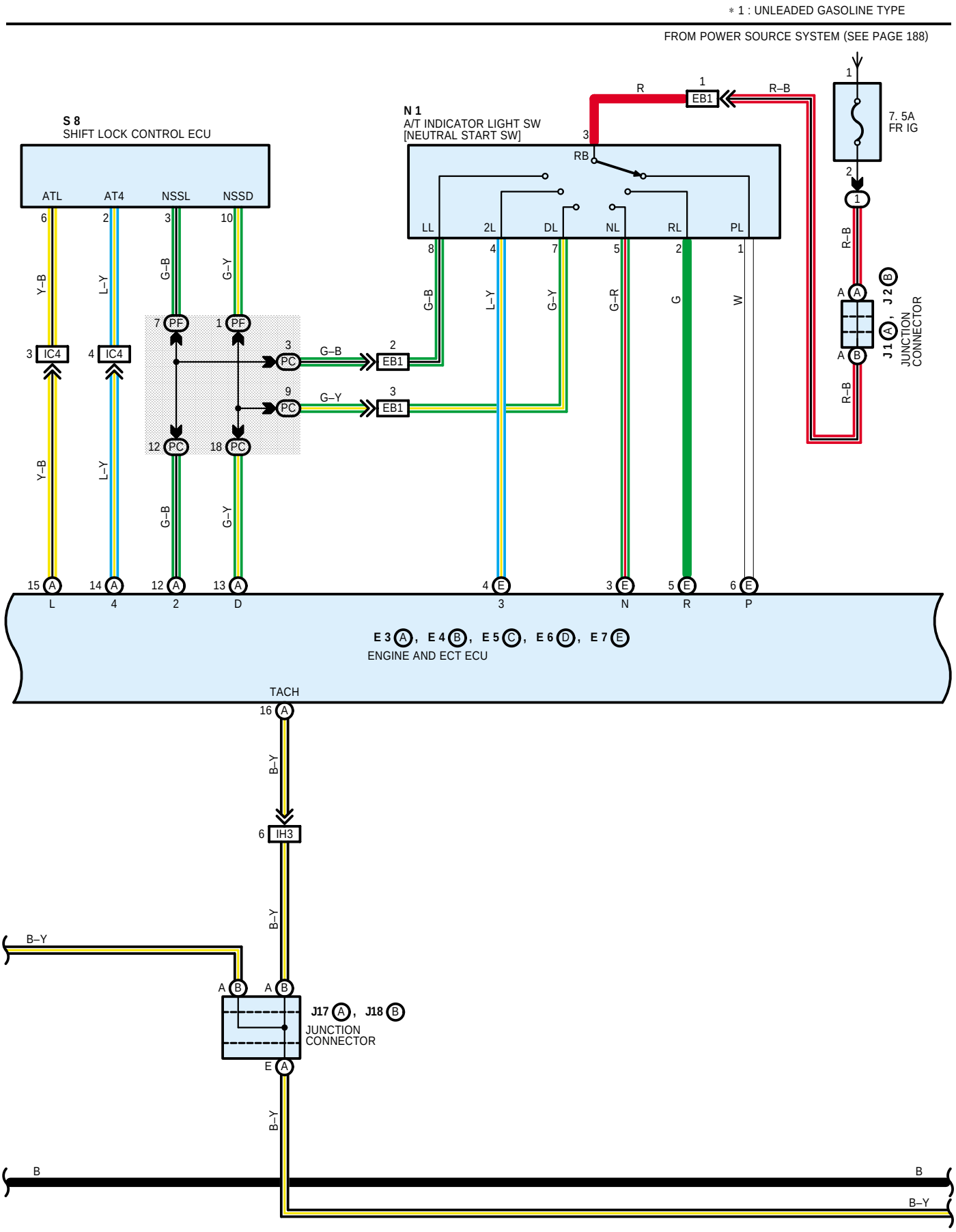

* 1 : UNLEADED GASOLINE TYPE
FROM POWER SOURCE SYSTEM (SEE PAGE 188)
S 8
SHIFT LOCK CONTROL ECU
ATL
AT4
NSSL
NSSD
N 1
A/T INDICATOR LIGHT SW
[NEUTRAL START SW]
RB
LL
2L
DL
NL
RL
PL
EB1
7. 5A
FR IG
IC4
PF
PC
G–B
G–Y
Y–B
L–Y
G–R
G
W
R
R–B
J1 A, J2 B
JUNCTION
CONNECTOR
E 3 A, E 4 B, E 5 C, E 6 D, E 7 E
ENGINE AND ECT ECU
TACH
B–Y
IH3
J17 A, J18 B
JUNCTION
CONNECTOR
B

ECT AND A/T INDICATOR (RHD)

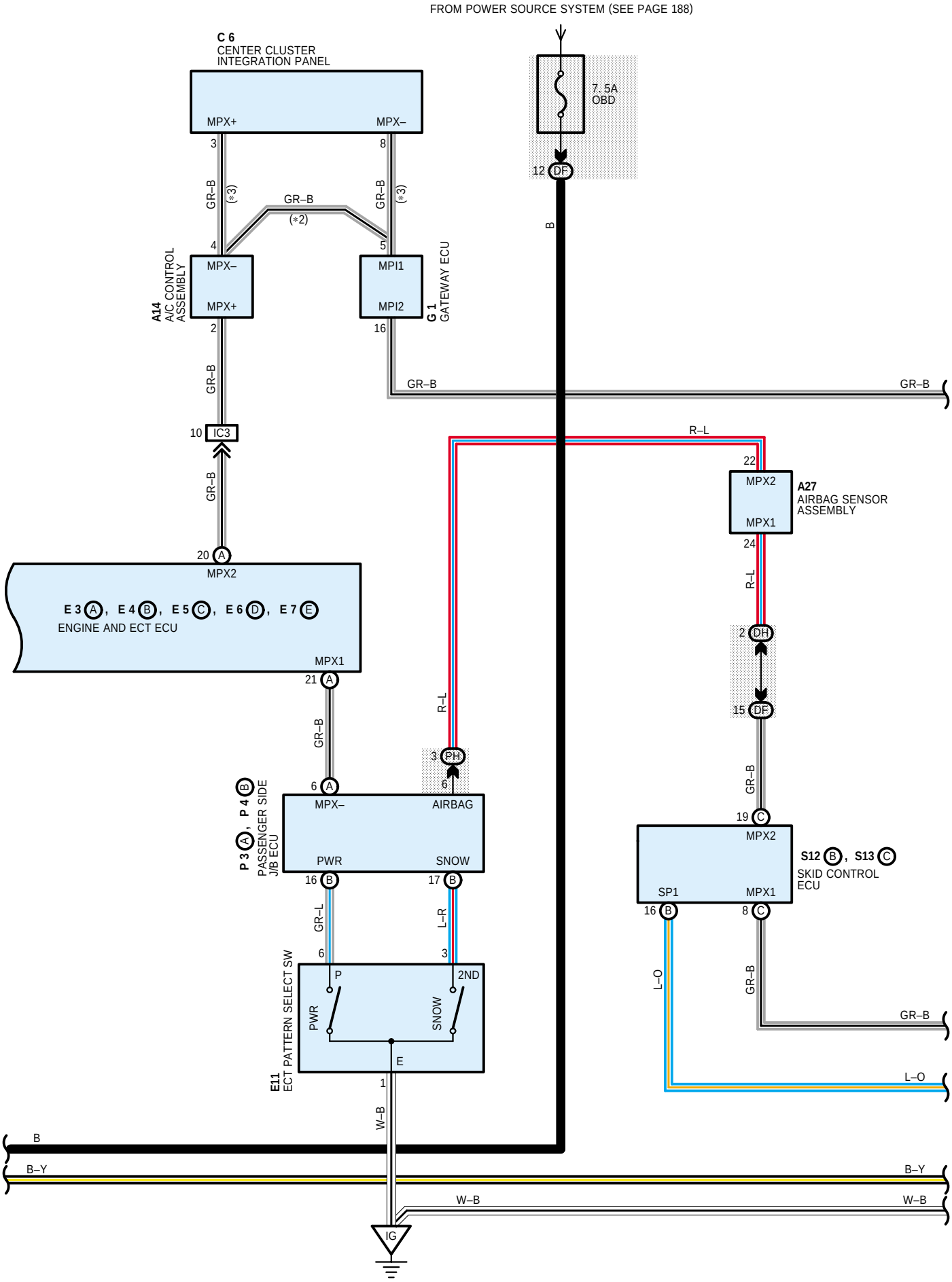
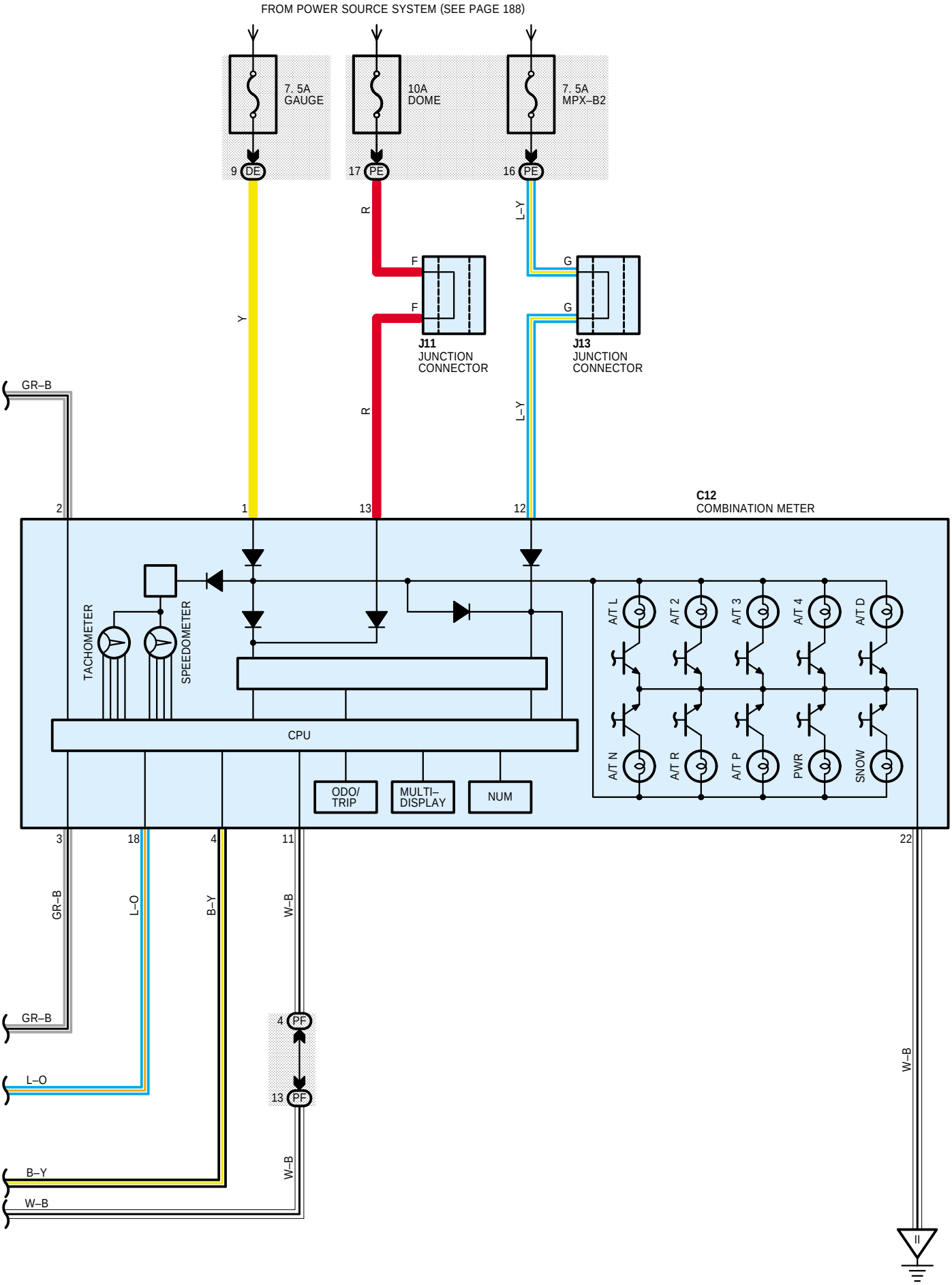
* 2 : W/ LEXUS NAVIGATION SYSTEM
* 3 : W/O LEXUS NAVIGATION SYSTEM