DOOR LOCK CONTROL (LHD w/o SMART KEY SYSTEM)

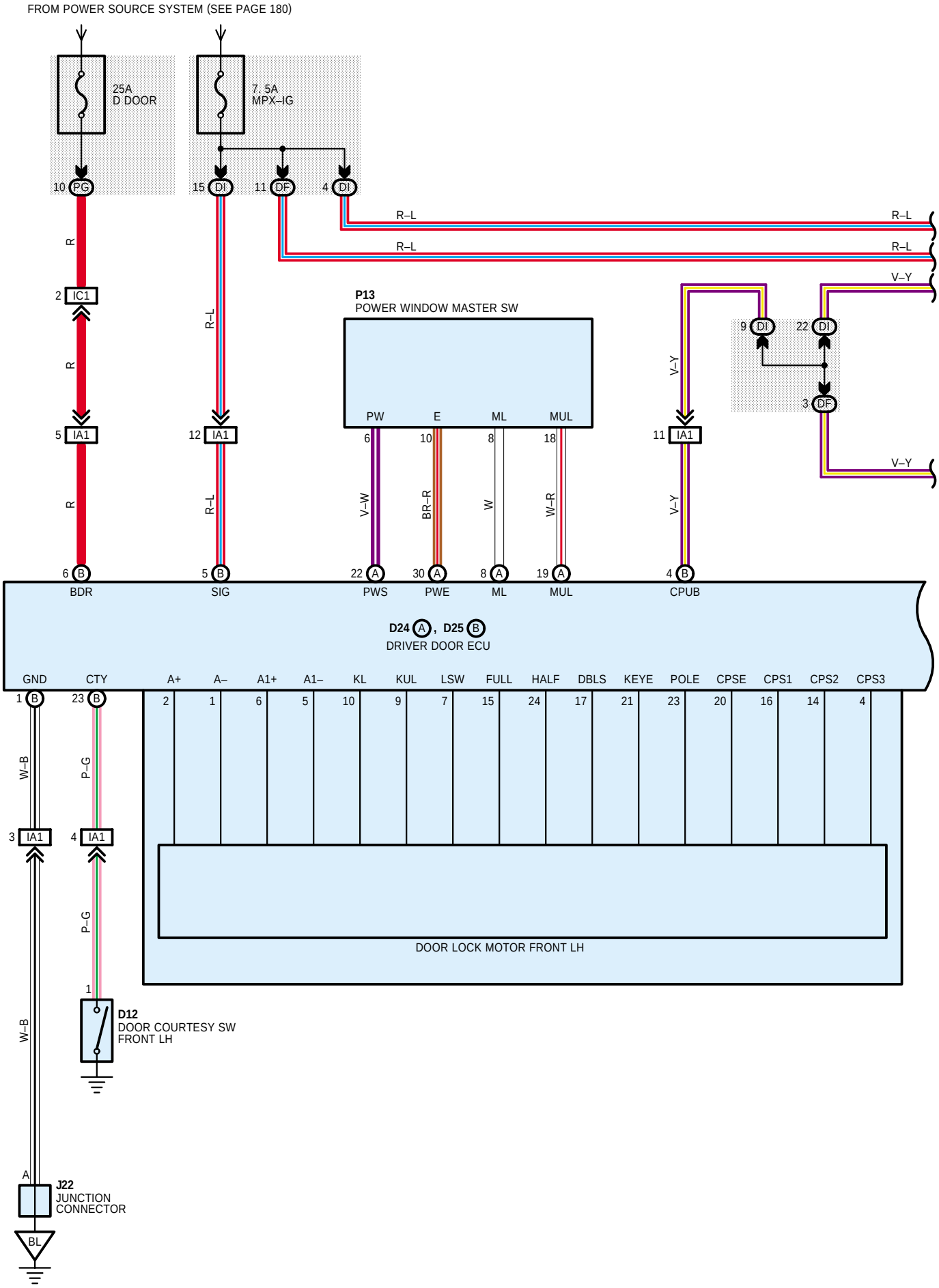

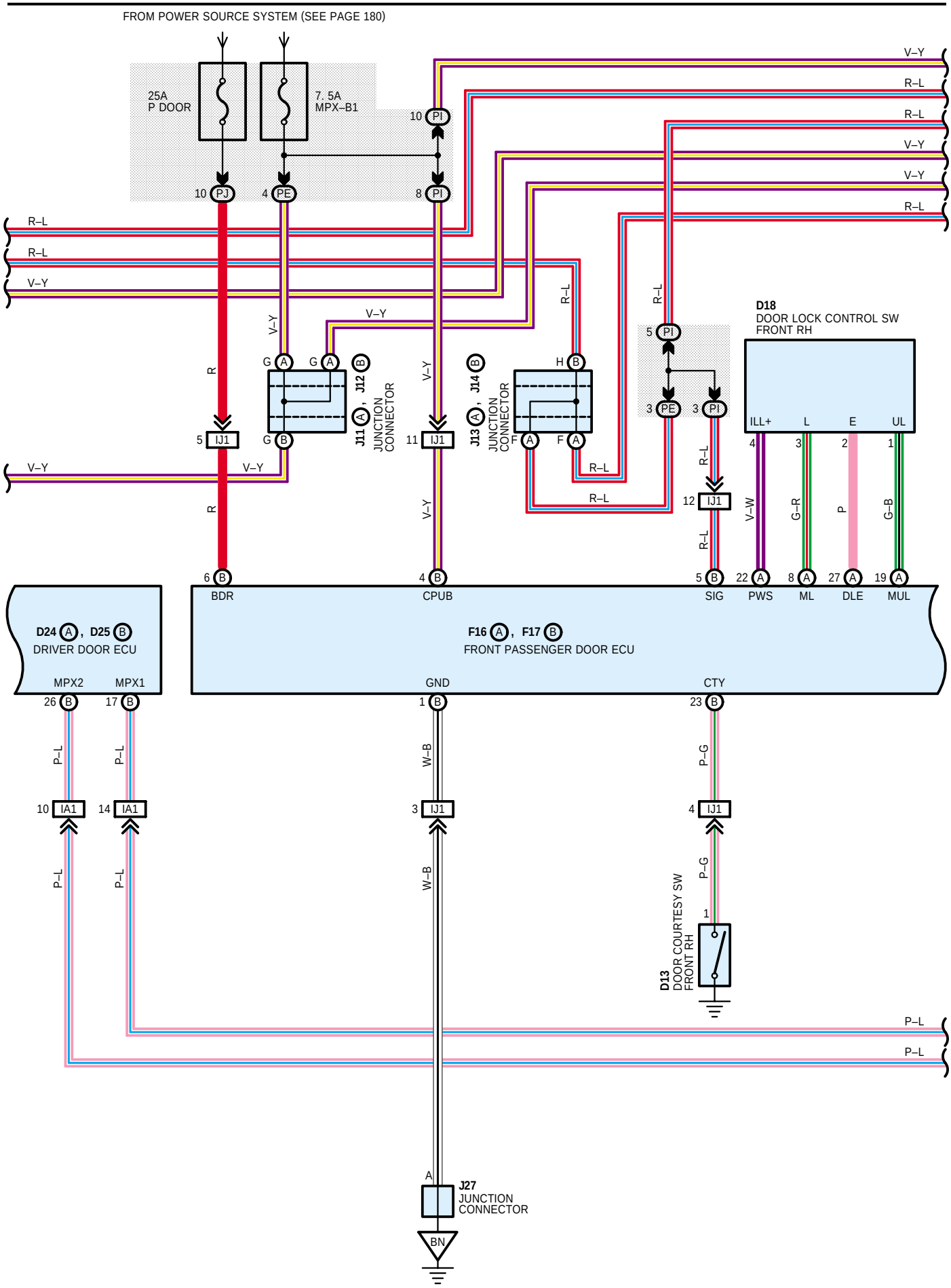
FROM POWER SOURCE SYSTEM (SEE PAGE 180)
25A
P DOOR
7. 5A
MPX–B1
10 PJ
4 PE
10 PI
8 PI
V–Y
R–L
R–L
V–Y
V–Y
R–L
R–L
R–L
V–Y
V–Y
V–Y
R
G A
G A
G B
J12 B
J11 A
JUNCTION CONNECTOR
5 IJ1
V–Y
V–Y
R
V–Y
11 IJ1
V–Y
J13 A
J14 B
JUNCTION CONNECTOR
H B
F A
F A
R–L
R–L
R–L
R–L
5 PI
3 PE
3 PI
D18
DOOR LOCK CONTROL SW
FRONT RH
ILL+
L
E
UL
4
3
2
1
12 IJ1
R–L
R–L
V–W
G–R
P
G–B
6 B
BDR
4 B
CPUB
5 B
SIG
22 A
PWS
8 A
ML
27 A
DLE
19 A
MUL
D24 A, D25 B
DRIVER DOOR ECU
MPX2
MPX1
26 B
17 B
F16 A, F17 B
FRONT PASSENGER DOOR ECU
GND
1 B
CTY
23 B
P–L
P–L
W–B
P–G
10 IA1
14 IA1
3 IJ1
4 IJ1
P–L
P–L
W–B
P–G
1
D13
DOOR COURTESY SW
FRONT RH
P–L
P–L
A
J27
JUNCTION CONNECTOR
BN

DOOR LOCK CONTROL (LHD w/o SMART KEY SYSTEM)

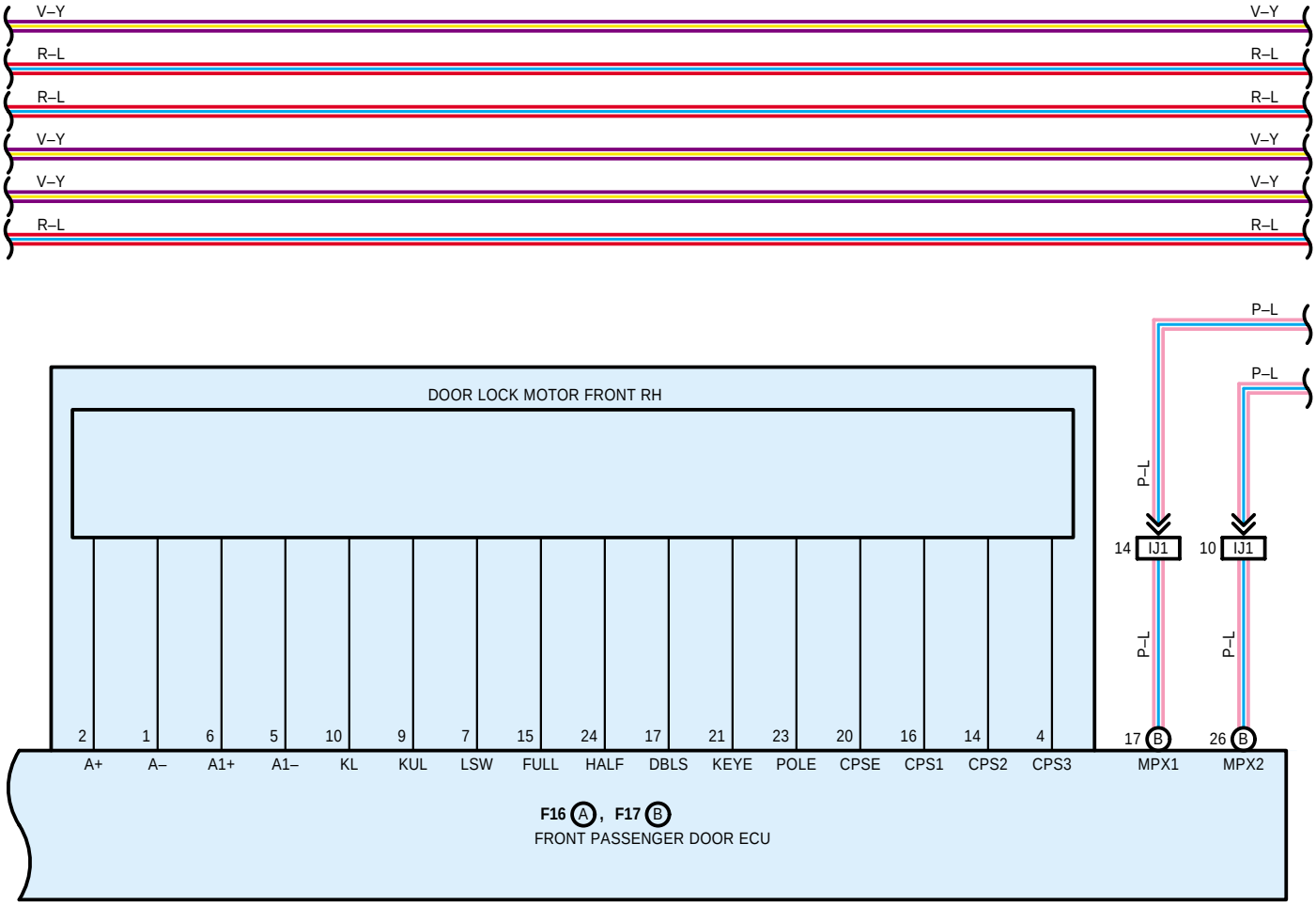

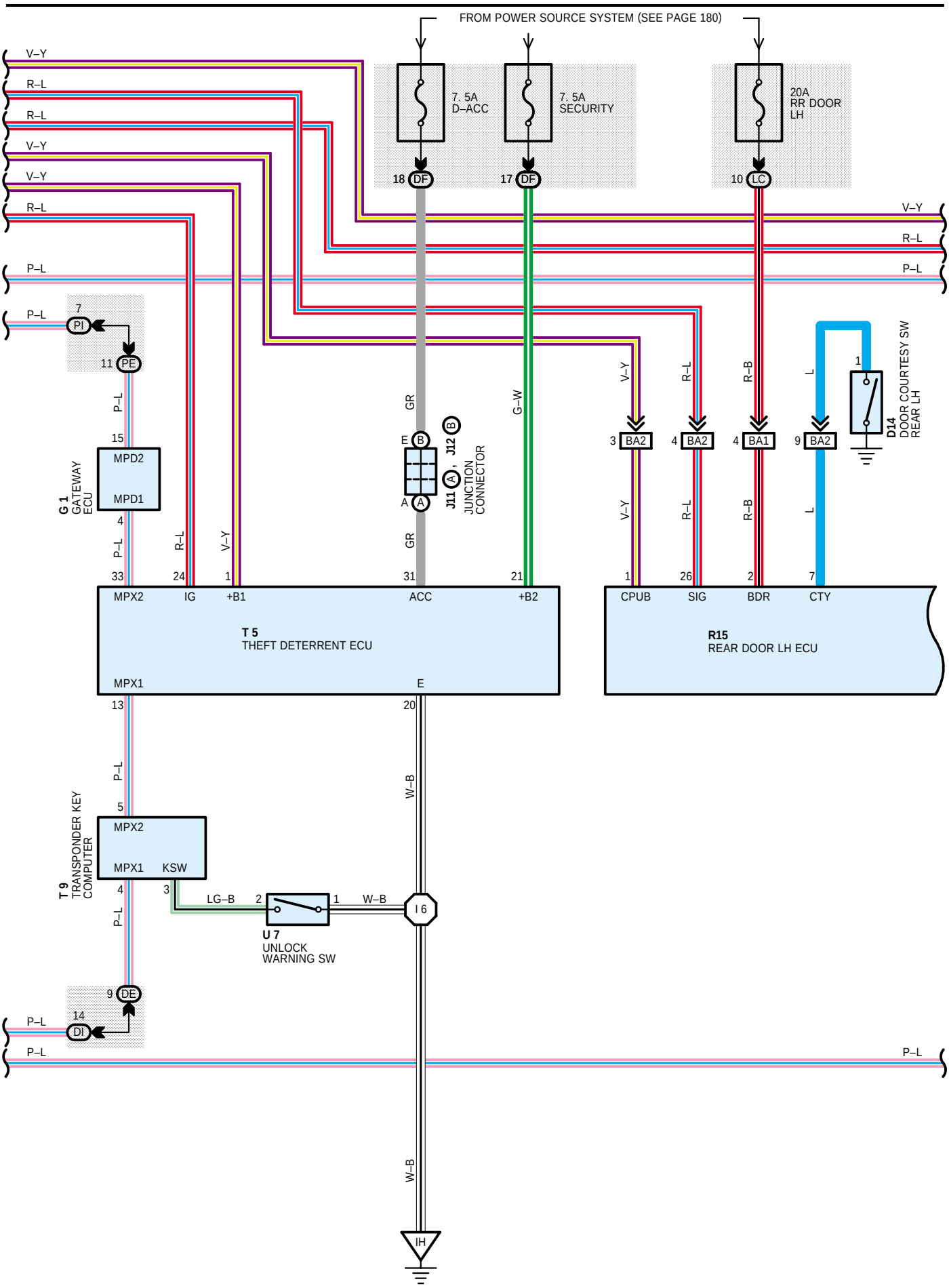
FROM POWER SOURCE SYSTEM (SEE PAGE 180)
7. 5A
D–ACC
7. 5A
SECURITY
20A
RR DOOR
LH
18 DF
17 DF
10 LC
V–Y
R–L
P–L
7 PI
11 PE
15
MPD2
MPD1
4
G 1
GATEWAY
ECU
GR
G–W
E B
A A
J12 B
J11 A
JUNCTION
CONNECTOR
3 BA2
4 BA2
4 BA1
9 BA2
1
D14
DOOR COURTESY SW
REAR LH
33
24
1
31
21
MPX2
IG
+B1
ACC
+B2
T 5
THEFT DETERRENT ECU
MPX1
E
13
20
1
26
2
7
CPUB
SIG
BDR
CTY
R15
REAR DOOR LH ECU
W–B
5
MPX2
MPX1
KSW
T 9
TRANSPONDER KEY
COMPUTER
LG–B
2
1
W–B
I 6
U 7
UNLOCK
WARNING SW
9 DE
14 DI
IH

DOOR LOCK CONTROL (LHD w/o SMART KEY SYSTEM)

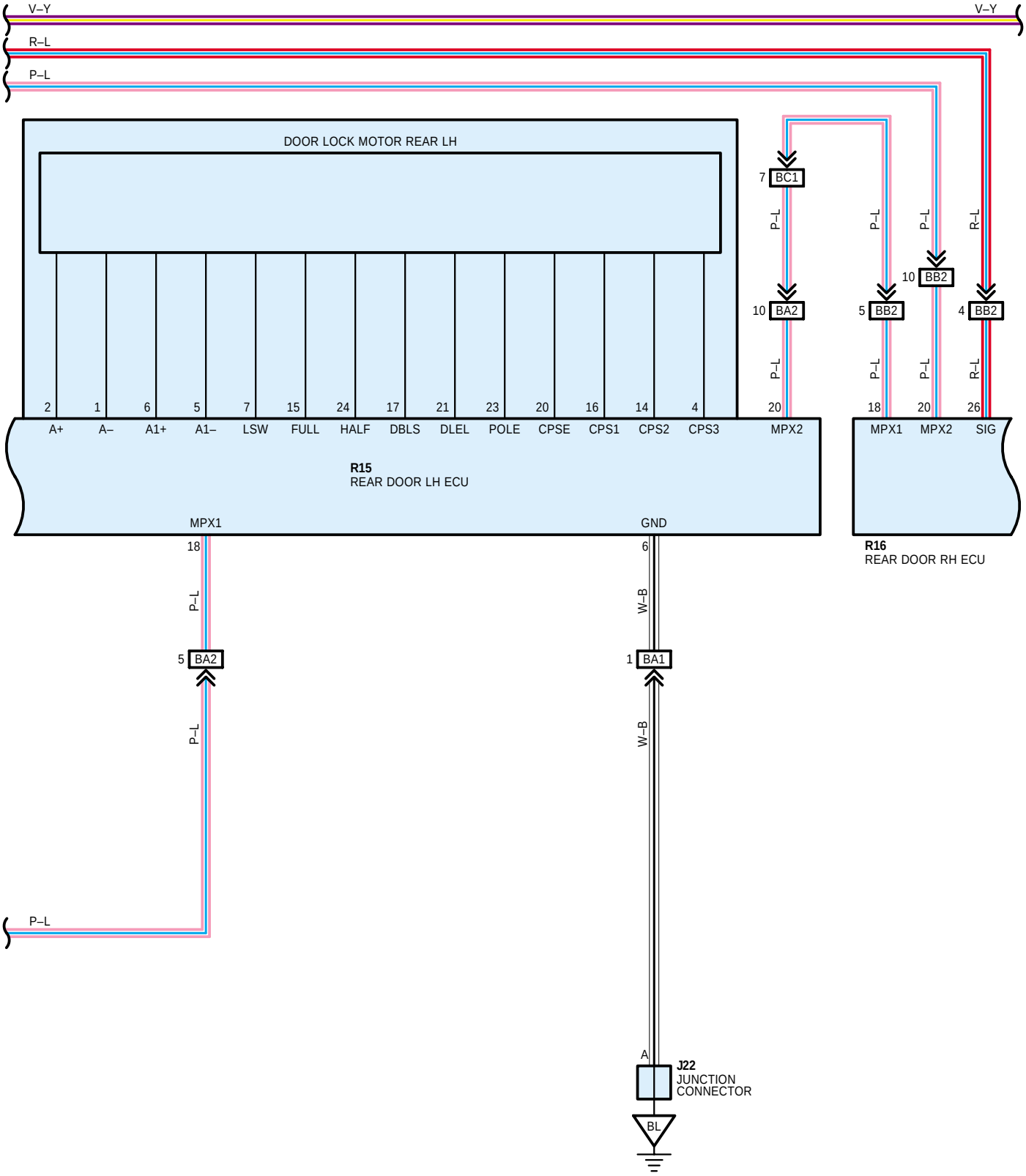

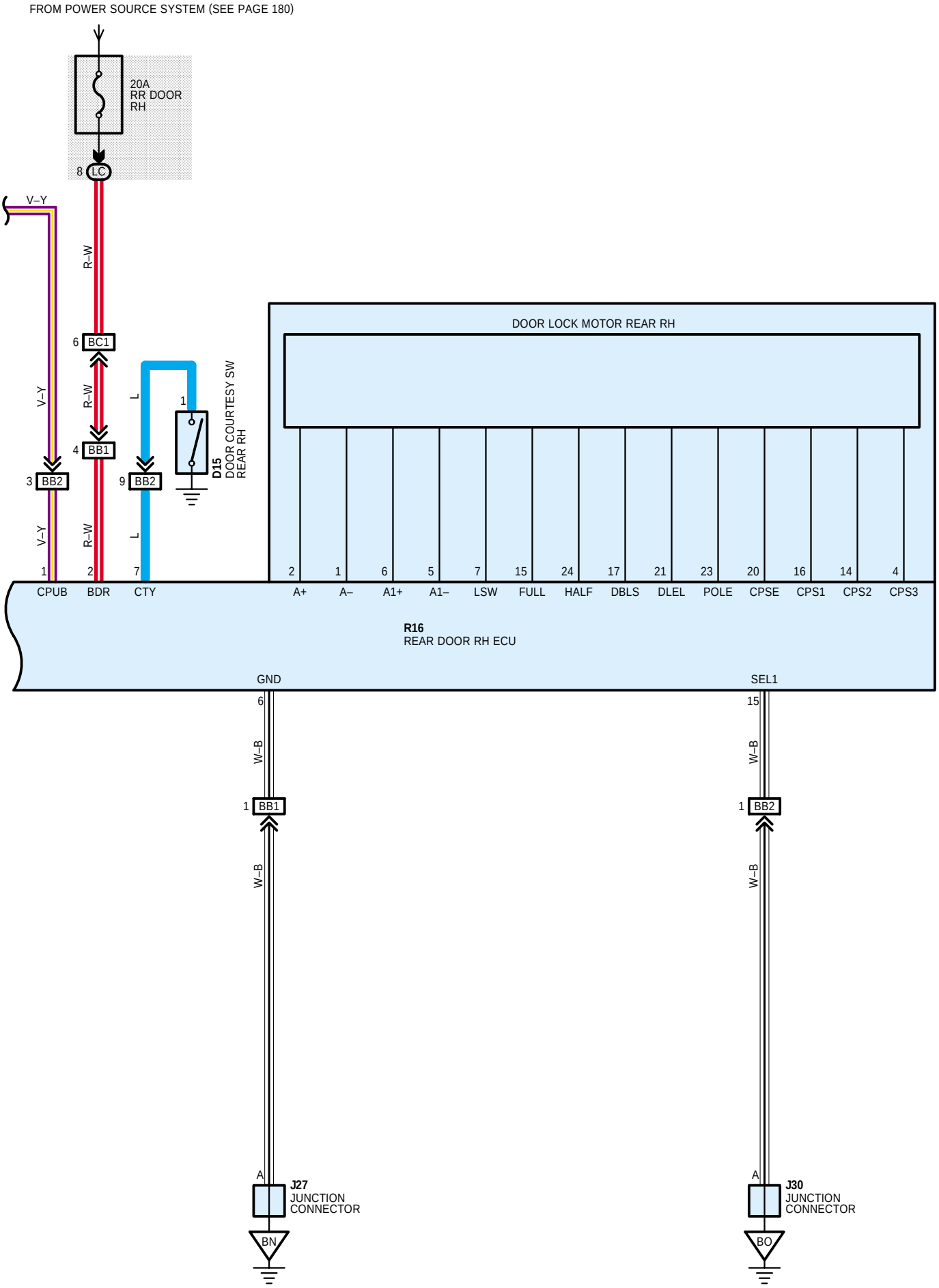
FROM POWER SOURCE SYSTEM (SEE PAGE 180)
20A
RR DOOR
RH
8 LC
V–Y
R–W
6 BC1
V–Y
R–W
4 BB1
3 BB2
V–Y
R–W
L
1
9 BB2
L
D15
DOOR COURTESY SW
REAR RH
DOOR LOCK MOTOR REAR RH
1 CPUB
2 BDR
7 CTY
2 A+
1 A–
6 A1+
5 A1–
7 LSW
15 FULL
24 HALF
17 DBLS
21 DLEL
23 POLE
20 CPSE
16 CPS1
14 CPS2
4 CPS3
R16
REAR DOOR RH ECU
GND
SEL1
6
15
W–B
W–B
1 BB1
1 BB2
W–B
W–B
A
J27
JUNCTION
CONNECTOR
BN
A
J30
JUNCTION
CONNECTOR
BO