COMBINATION METER (RHD)

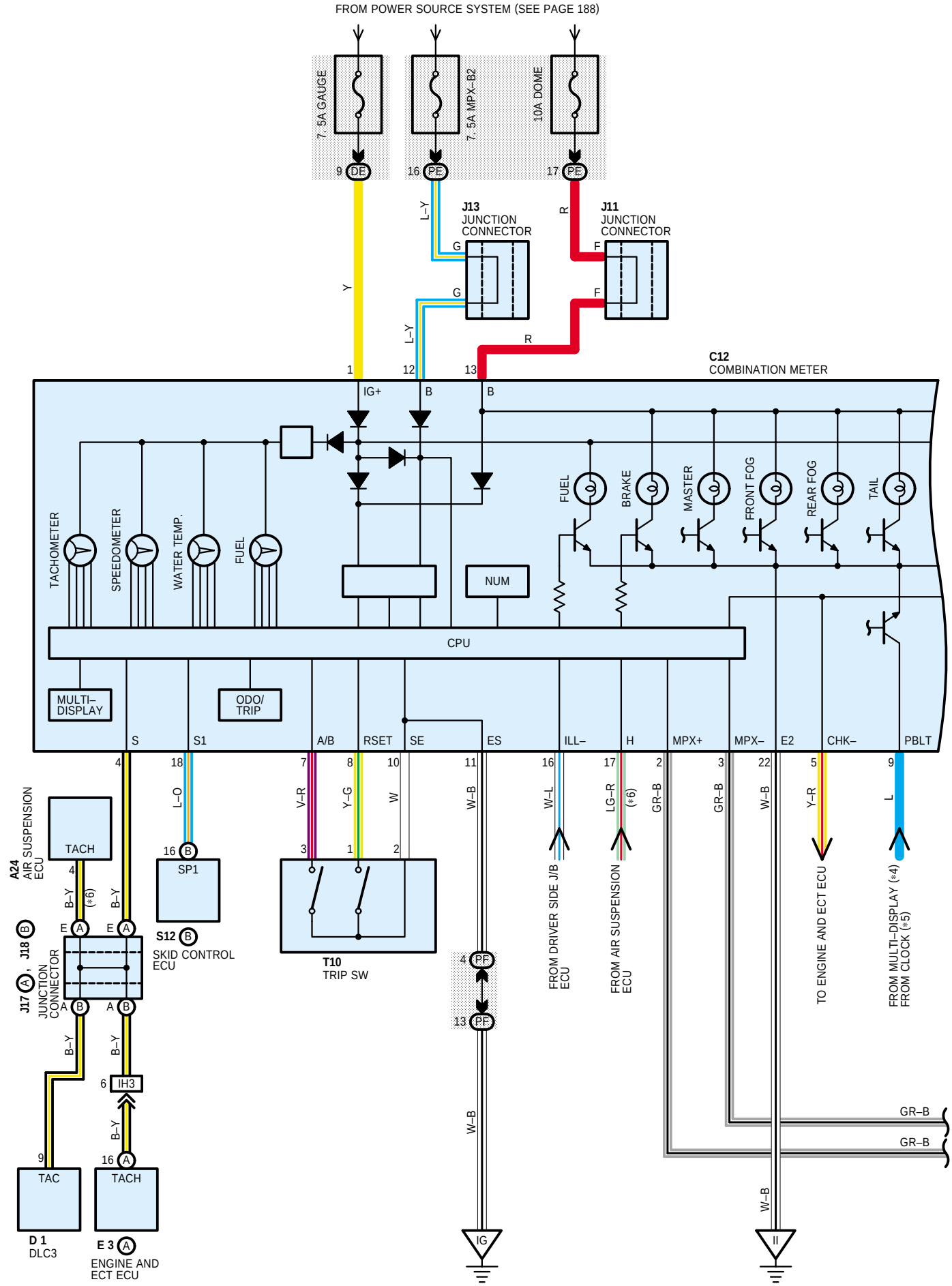

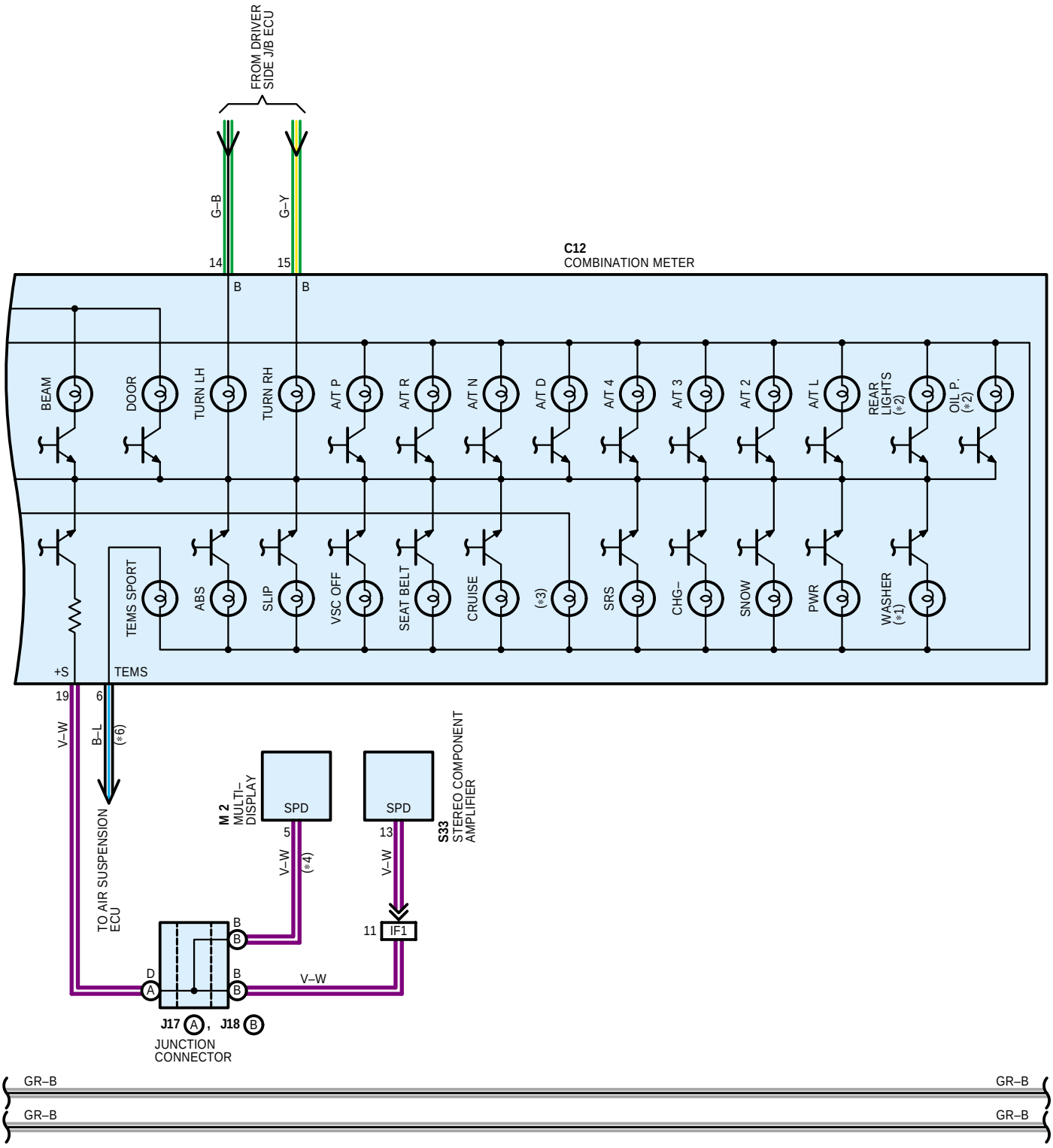
FROM DRIVER SIDE J/B ECU
G–B
G–Y
14
15
B
B
C12
COMBINATION METER
BEAM
DOOR
TURN LH
TURN RH
A/T P
A/T R
A/T N
A/T D
A/T 4
A/T 3
A/T 2
A/T L
REAR LIGHTS (∗2)
OIL P. (∗2)
TEMS SPORT
ABS
SLIP
VSC OFF
SEAT BELT
CRUISE
(∗3)
SRS
CHG–
SNOW
PWR
WASHER (∗1)
+S
TEMS
19
6
V–W
B–L
(∗6)
TO AIR SUSPENSION ECU
M 2
MULTI–DISPLAY
SPD
5
V–W
(∗4)
SPD
13
V–W
S33
STEREO COMPONENT AMPLIFIER
11
IF1
B
B
D
A
B
B
V–W
J17 A , J18 B
JUNCTION CONNECTOR
GR–B
GR–B
GR–B
GR–B

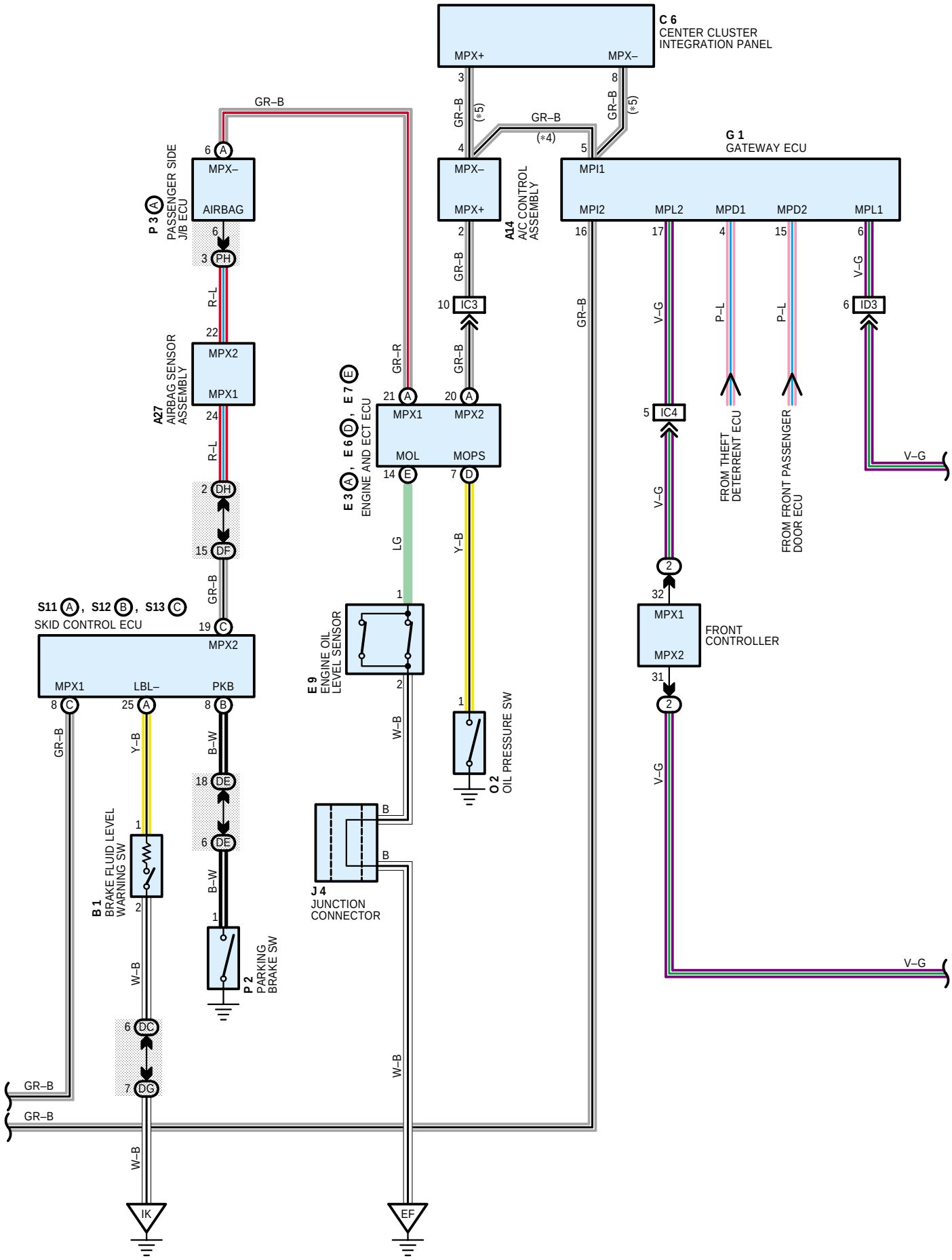
C 6
CENTER CLUSTER
INTEGRATION PANEL
MPX+
MPX–
GR–B
(*5)
(*4)
G 1
GATEWAY ECU
MPI1
MPI2
MPL2
MPD1
MPD2
MPL1
A14
A/C CONTROL
ASSEMBLY
P 3
PASSENGER SIDE
J/B ECU
AIRBAG
PH
R–L
A27
AIRBAG SENSOR
ASSEMBLY
MPX2
MPX1
DH
DF
GR–R
E 3, E 6, E 7
ENGINE AND ECT ECU
MOL
MOPS
LG
Y–B
IC3
IC4
ID3
V–G
P–L
FROM THEFT
DETERRENT ECU
FROM FRONT PASSENGER
DOOR ECU
FRONT
CONTROLLER
S11, S12, S13
SKID CONTROL ECU
LBL–
PKB
B–W
DE
DC
DG
E 9
ENGINE OIL
LEVEL SENSOR
W–B
O 2
OIL PRESSURE SW
J 4
JUNCTION
CONNECTOR
B 1
BRAKE FLUID LEVEL
WARNING SW
P 2
PARKING
BRAKE SW
IK
EF

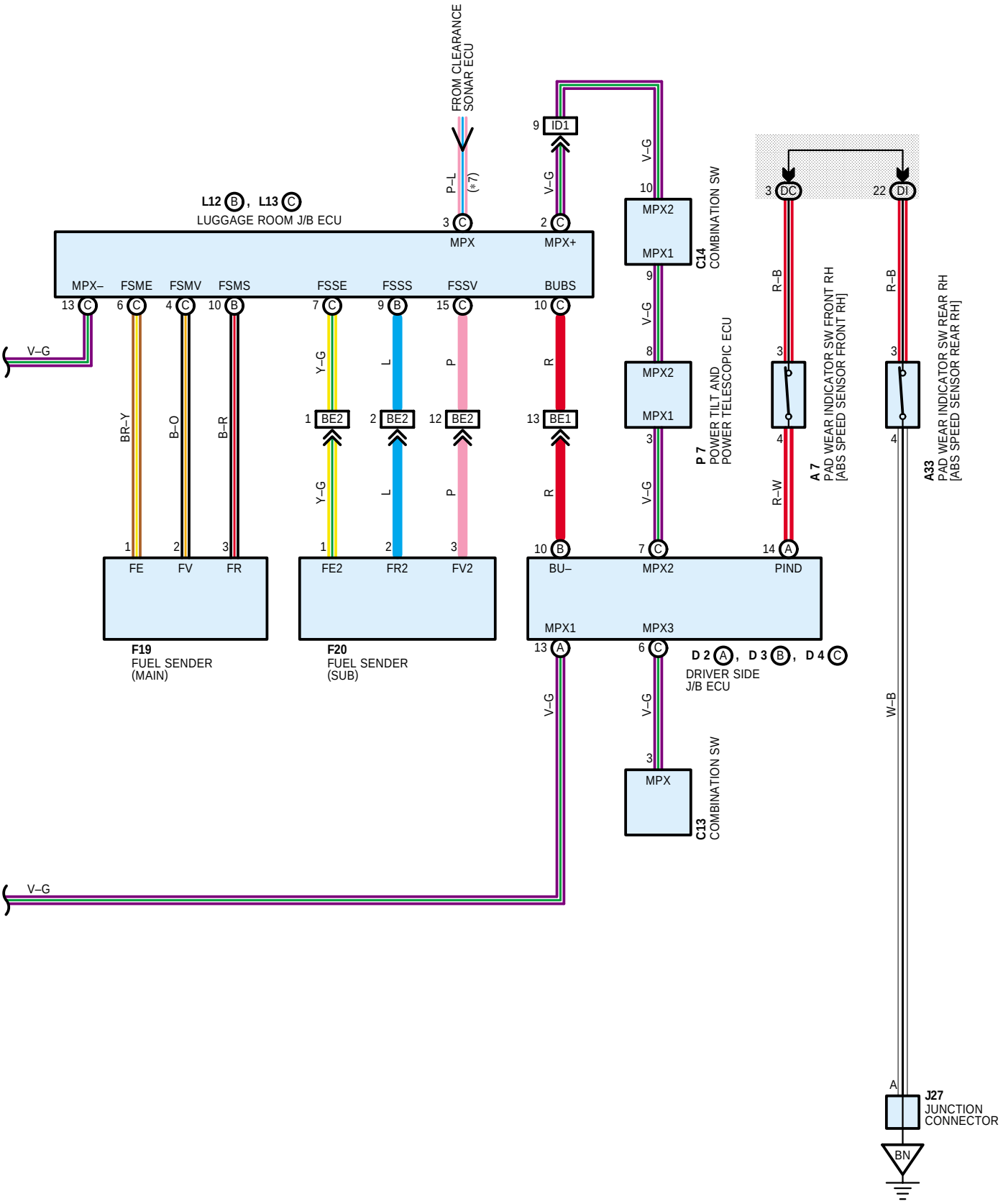
FROM CLEARANCE SONAR ECU
P–L
(*7)
V–G
L12 B , L13 C
LUGGAGE ROOM J/B ECU
MPX
MPX+
MPX–
FSME
FSMV
FSMS
FSSE
FSSS
FSSV
BUBS
ID1
BE2
BE1
BR–Y
B–O
B–R
Y–G
L
P
R
MPX2
MPX1
C14
COMBINATION SW
P 7
POWER TILT AND POWER TELESCOPIC ECU
DC
DI
R–B
R–W
A 7
PAD WEAR INDICATOR SW FRONT RH [ABS SPEED SENSOR FRONT RH]
A33
PAD WEAR INDICATOR SW REAR RH [ABS SPEED SENSOR REAR RH]
FE
FV
FR
FE2
FR2
FV2
F19
FUEL SENDER (MAIN)
F20
FUEL SENDER (SUB)
BU–
PIND
MPX3
D 2 A , D 3 B , D 4 C
DRIVER SIDE J/B ECU
C13
COMBINATION SW
W–B
J27
JUNCTION CONNECTOR
BN