CLIMATE CONTROL SEAT (LHD)

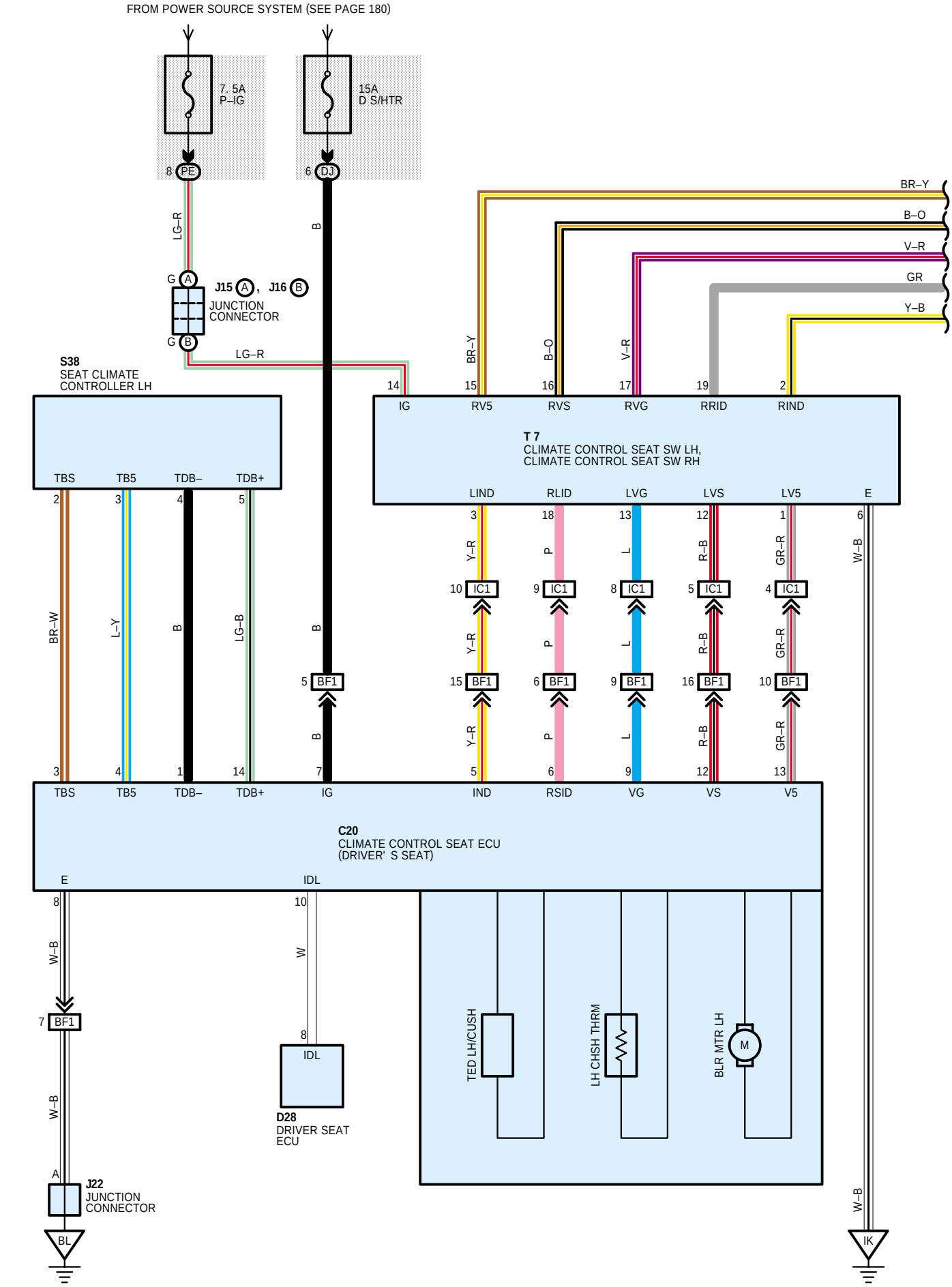

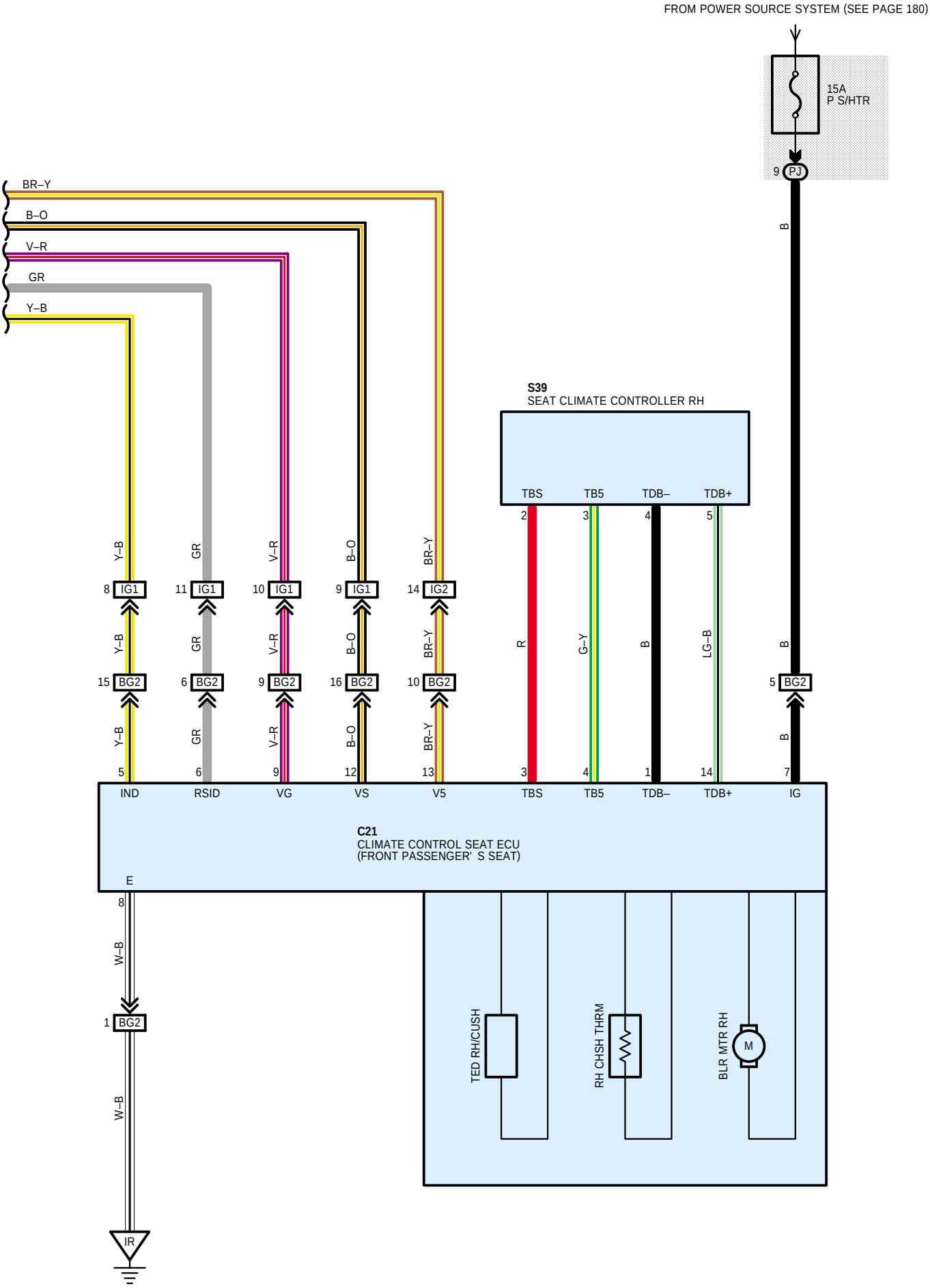
FROM POWER SOURCE SYSTEM (SEE PAGE 180)
15A
P S/HTR
9 PJ
B
BR–Y
B–O
V–R
GR
Y–B
S39
SEAT CLIMATE CONTROLLER RH
TBS
TB5
TDB–
TDB+
2
3
4
5
8 IG1
11 IG1
10 IG1
9 IG1
14 IG2
15 BG2
6 BG2
9 BG2
16 BG2
10 BG2
5 BG2
R
G–Y
B
LG–B
5
6
9
12
13
3
4
1
14
7
IND
RSID
VG
VS
V5
TBS
TB5
TDB–
TDB+
IG
C21
CLIMATE CONTROL SEAT ECU
(FRONT PASSENGER' S SEAT)
E
8
W–B
1 BG2
IR
TED RH/CUSH
RH CHSH THRM
BLR MTR RH
M