CRUISE CONTROL (LHD)

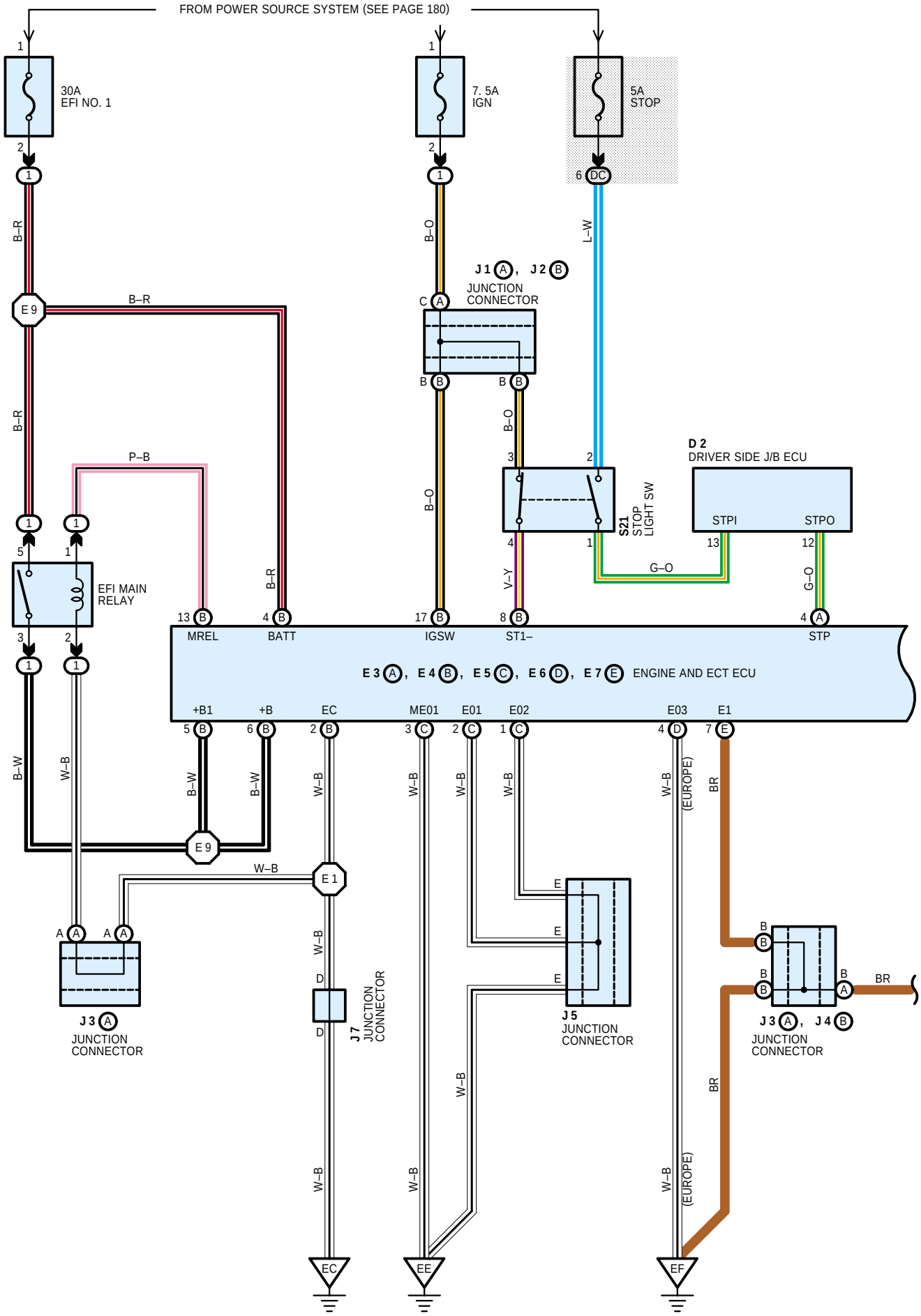

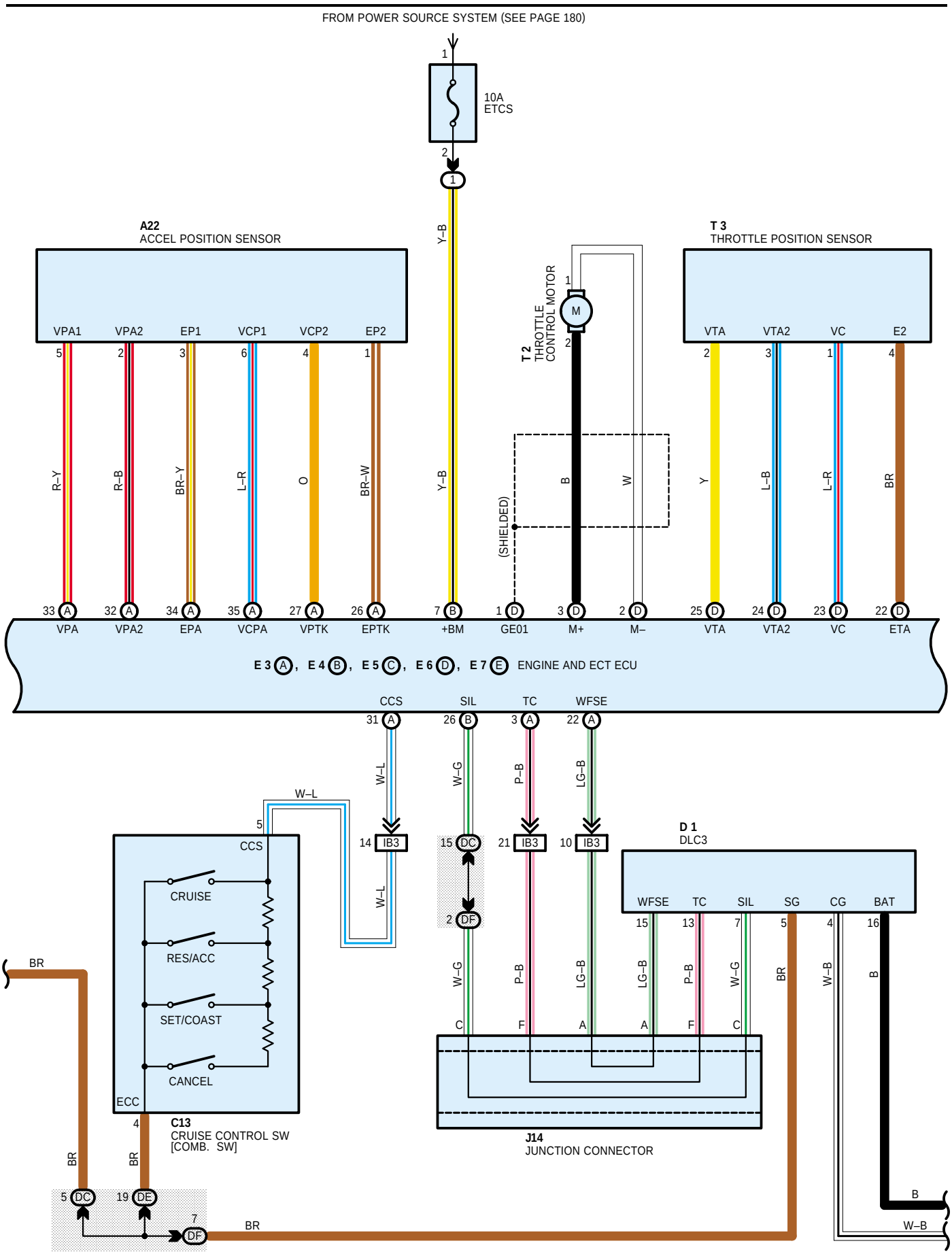
FROM POWER SOURCE SYSTEM (SEE PAGE 180)
10A
ETCS
A22
ACCEL POSITION SENSOR
VPA1
VPA2
EP1
VCP1
VCP2
EP2
T 2
THROTTLE
CONTROL MOTOR
T 3
THROTTLE POSITION SENSOR
VTA
VTA2
VC
E2
(SHIELDED)
VPA
VPA2
EPA
VCPA
VPTK
EPTK
+BM
GE01
M+
M–
VTA
VTA2
VC
ETA
E 3 A, E 4 B, E 5 C, E 6 D, E 7 E ENGINE AND ECT ECU
CCS
SIL
TC
WFSE
IB3
CRUISE
RES/ACC
SET/COAST
CANCEL
ECC
C13
CRUISE CONTROL SW
[COMB. SW]
D 1
DLC3
WFSE
TC
SIL
SG
CG
BAT
J14
JUNCTION CONNECTOR
BR
W–L
W–G
P–B
LG–B
W–B
B

CRUISE CONTROL (LHD)

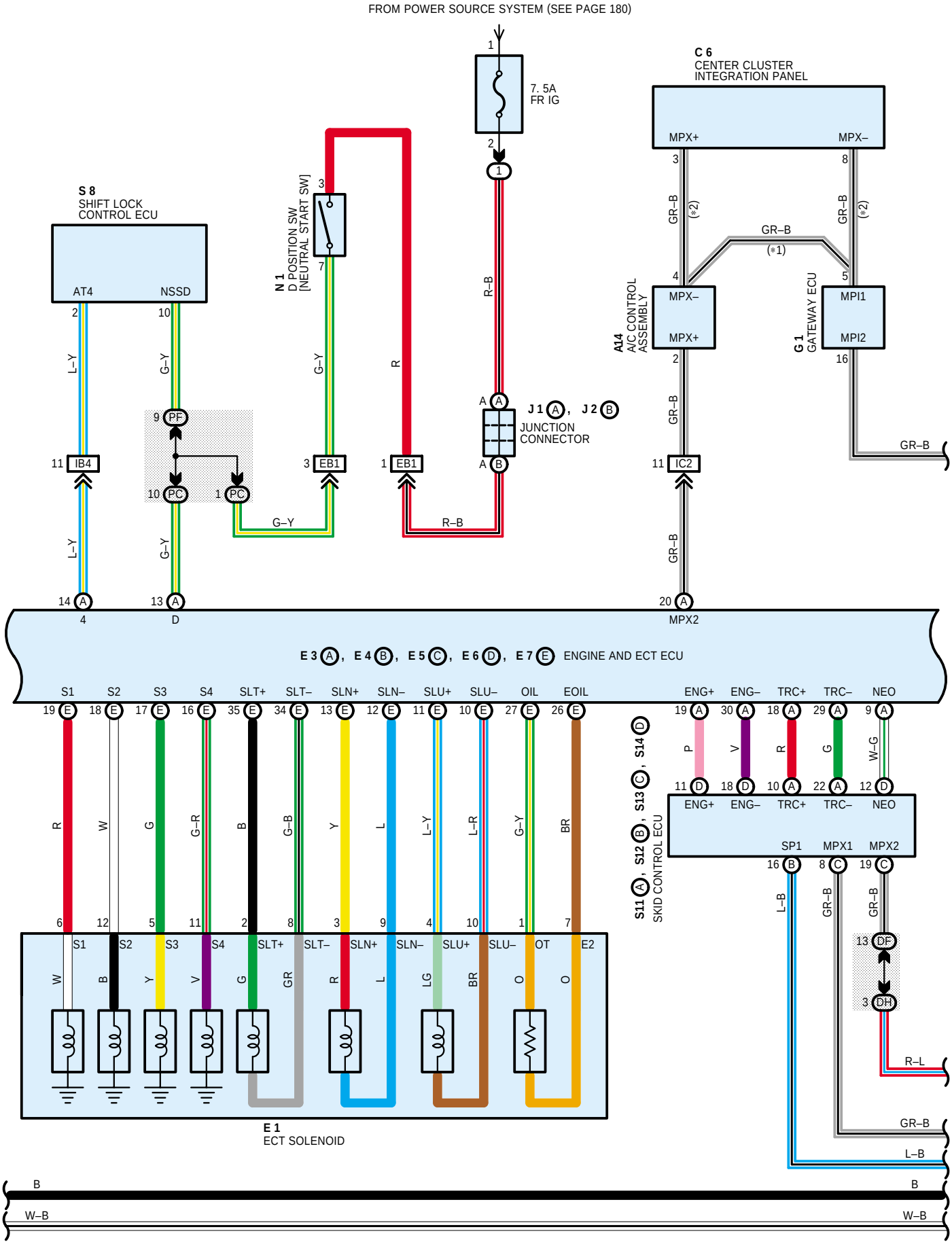

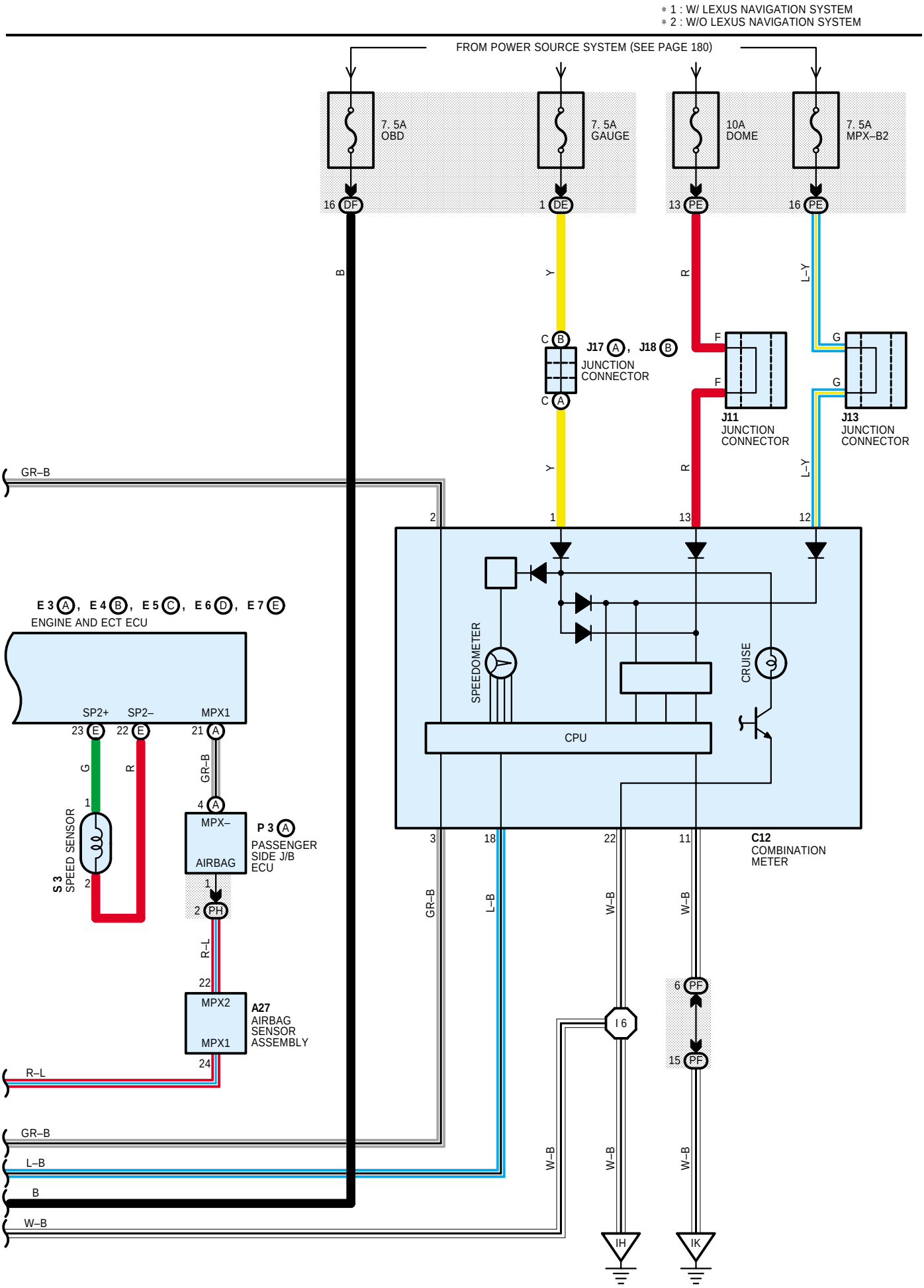

* 1 : W/ LEXUS NAVIGATION SYSTEM
* 2 : W/O LEXUS NAVIGATION SYSTEM
FROM POWER SOURCE SYSTEM (SEE PAGE 180)
7. 5A OBD
7. 5A GAUGE
10A DOME
7. 5A MPX–B2
16 DF
1 DE
13 PE
16 PE
B
Y
R
L–Y
C B
J17 A, J18 B
JUNCTION CONNECTOR
C A
F
F
G
G
J11 JUNCTION CONNECTOR
J13 JUNCTION CONNECTOR
GR–B
2
1
13
12
E 3 A, E 4 B, E 5 C, E 6 D, E 7 E
ENGINE AND ECT ECU
SP2+
SP2–
MPX1
23 E
22 E
21 A
G
R
GR–B
1
2
S 3 SPEED SENSOR
4 A
MPX–
AIRBAG
P 3 A
PASSENGER SIDE J/B ECU
1
2 PH
R–L
22
MPX2
MPX1
A27
AIRBAG SENSOR ASSEMBLY
24
R–L
SPEEDOMETER
CRUISE
CPU
3
18
22
11
C12
COMBINATION METER
GR–B
L–B
W–B
W–B
6 PF
15 PF
I 6
GR–B
L–B
B
W–B
W–B
W–B
W–B
IH
IK