AUTOMATIC AIR CONDITIONER (FRONT) [RHD]

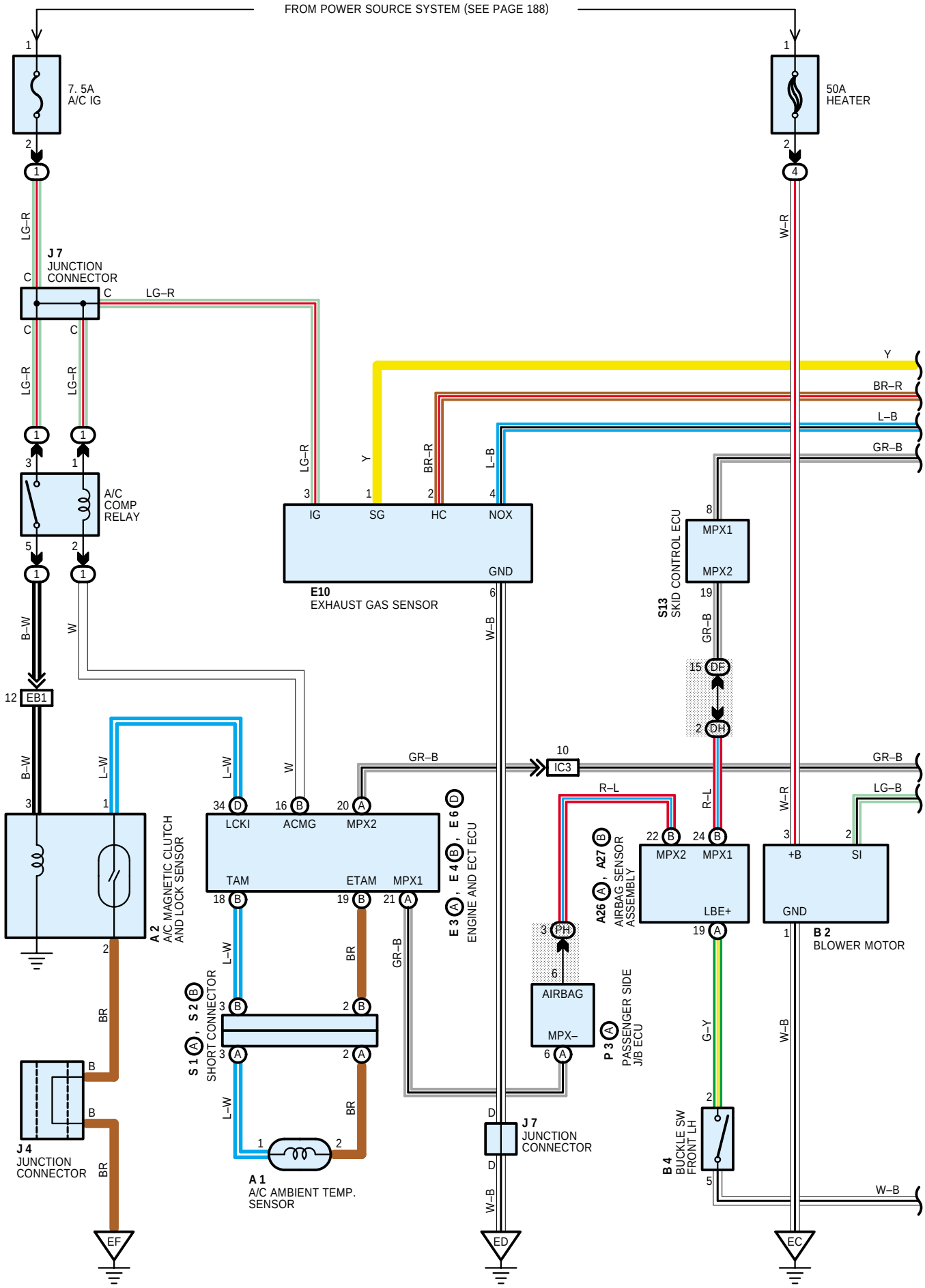

* 1 : W/O LEXUS NAVIGATION SYSTEM
* 2 : W/ LEXUS NAVIGATION SYSTEM

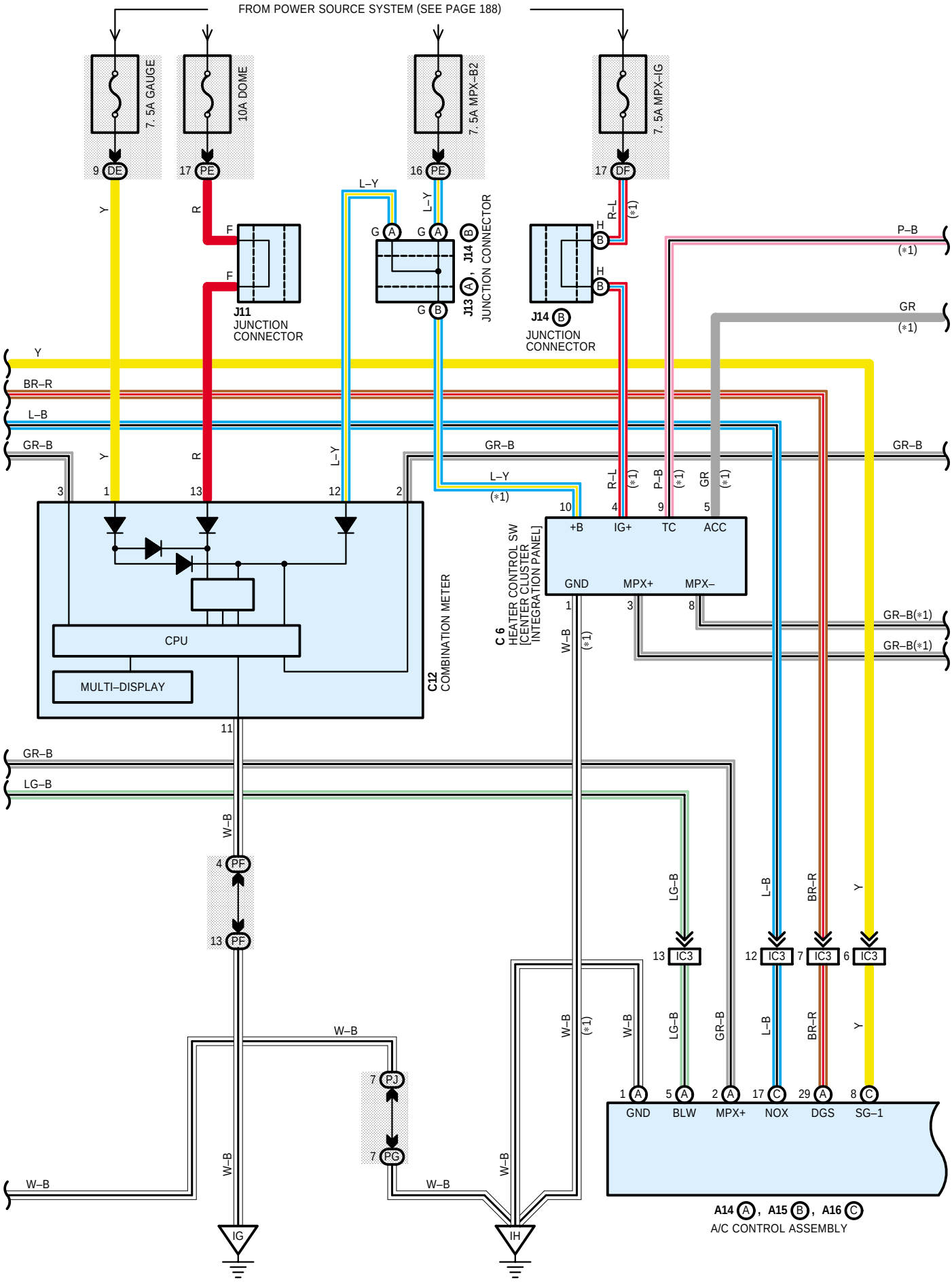

AUTOMATIC AIR CONDITIONER (FRONT) [RHD]

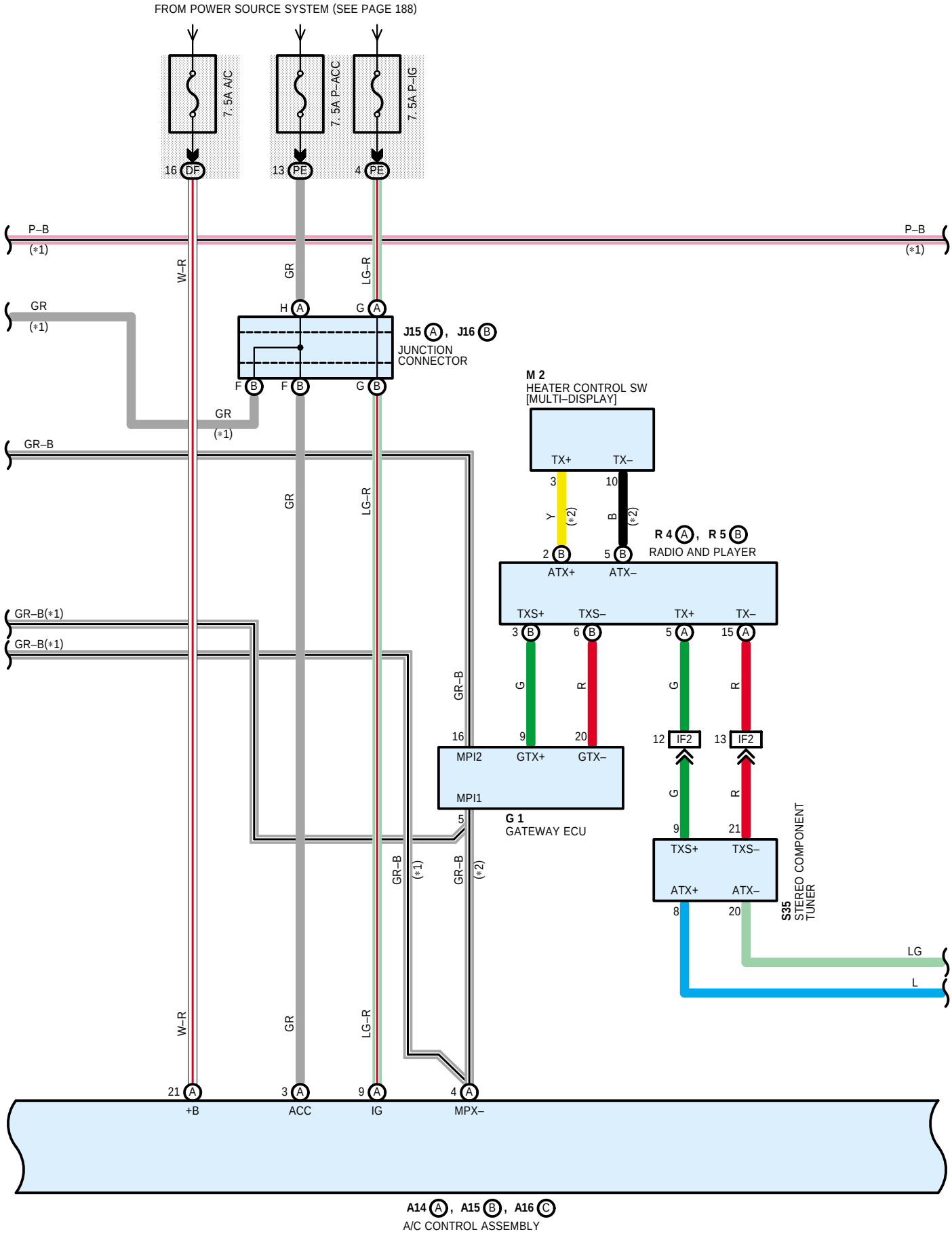

∗1 : W/O LEXUS NAVIGATION SYSTEM
∗2 : W/ LEXUS NAVIGATION SYSTEM
∗3 : W/ REAR AUDIO CONTROLLER
∗4 : W/ REAR POWER SEAT
∗5 : W/O REAR POWER SEAT
∗6 : UNLEADED GASOLINE TYPE

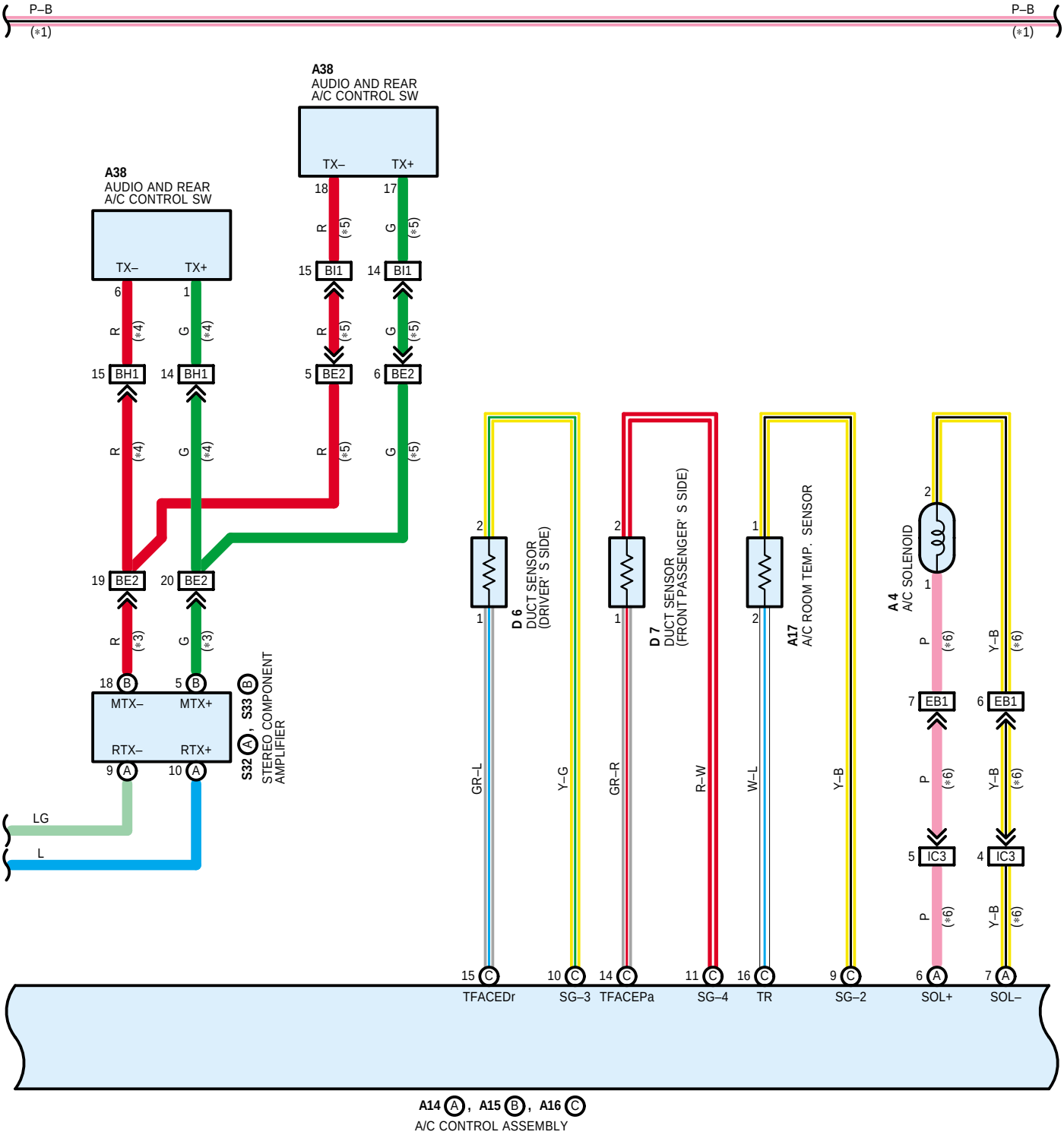

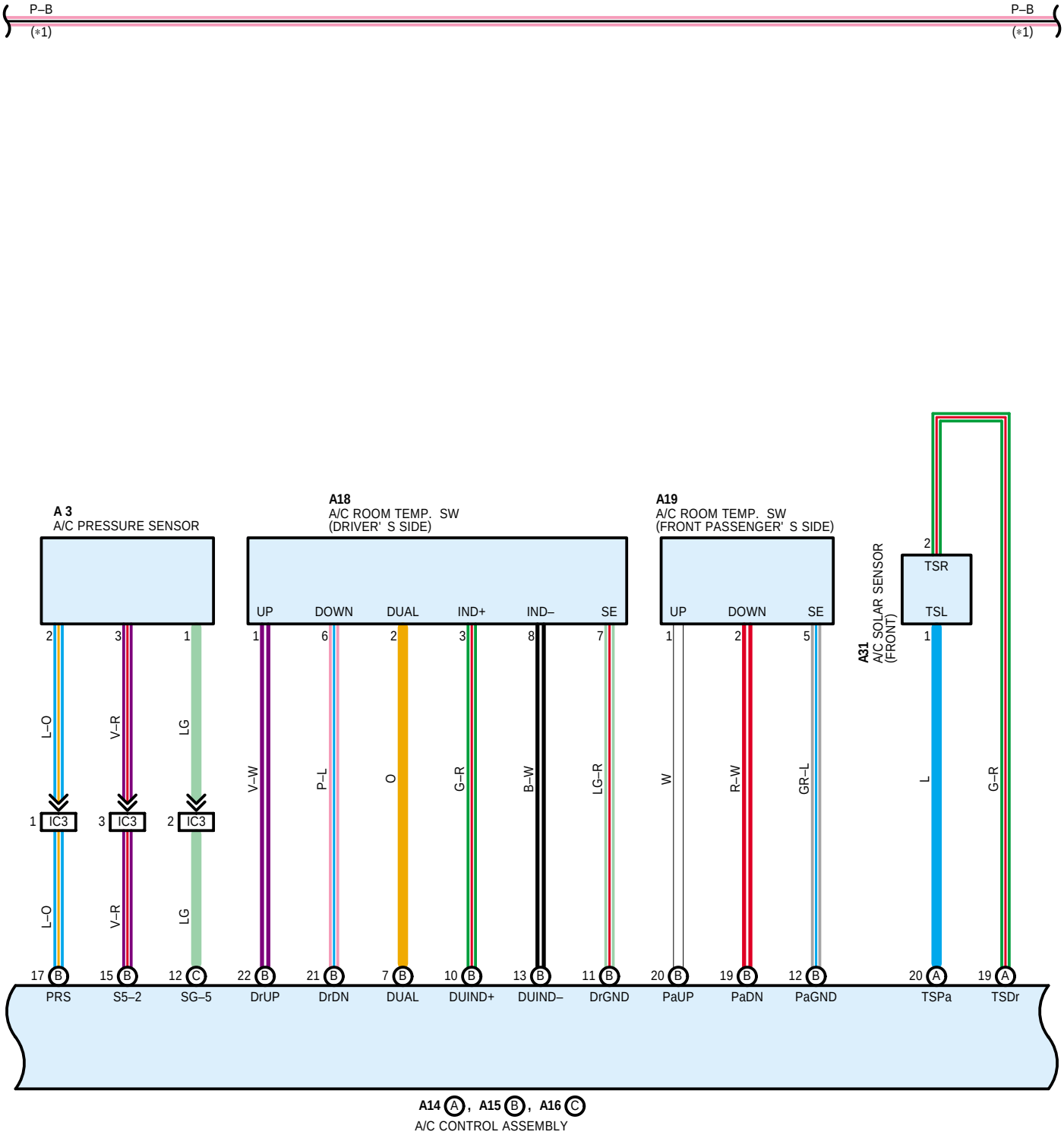
P–B
(*1)
P–B
(*1)
A 3
A/C PRESSURE SENSOR
A18
A/C ROOM TEMP. SW
(DRIVER' S SIDE)
A19
A/C ROOM TEMP. SW
(FRONT PASSENGER' S SIDE)
A31
A/C SOLAR SENSOR
(FRONT)
UP
DOWN
DUAL
IND+
IND–
SE
TSR
TSL
IC3
L–O
V–R
LG
V–W
P–L
O
G–R
B–W
LG–R
W
R–W
GR–L
L
PRS
S5–2
SG–5
DrUP
DrDN
DUAL
DUIND+
DUIND–
DrGND
PaUP
PaDN
PaGND
TSPa
TSDr
A14 A, A15 B, A16 C
A/C CONTROL ASSEMBLY

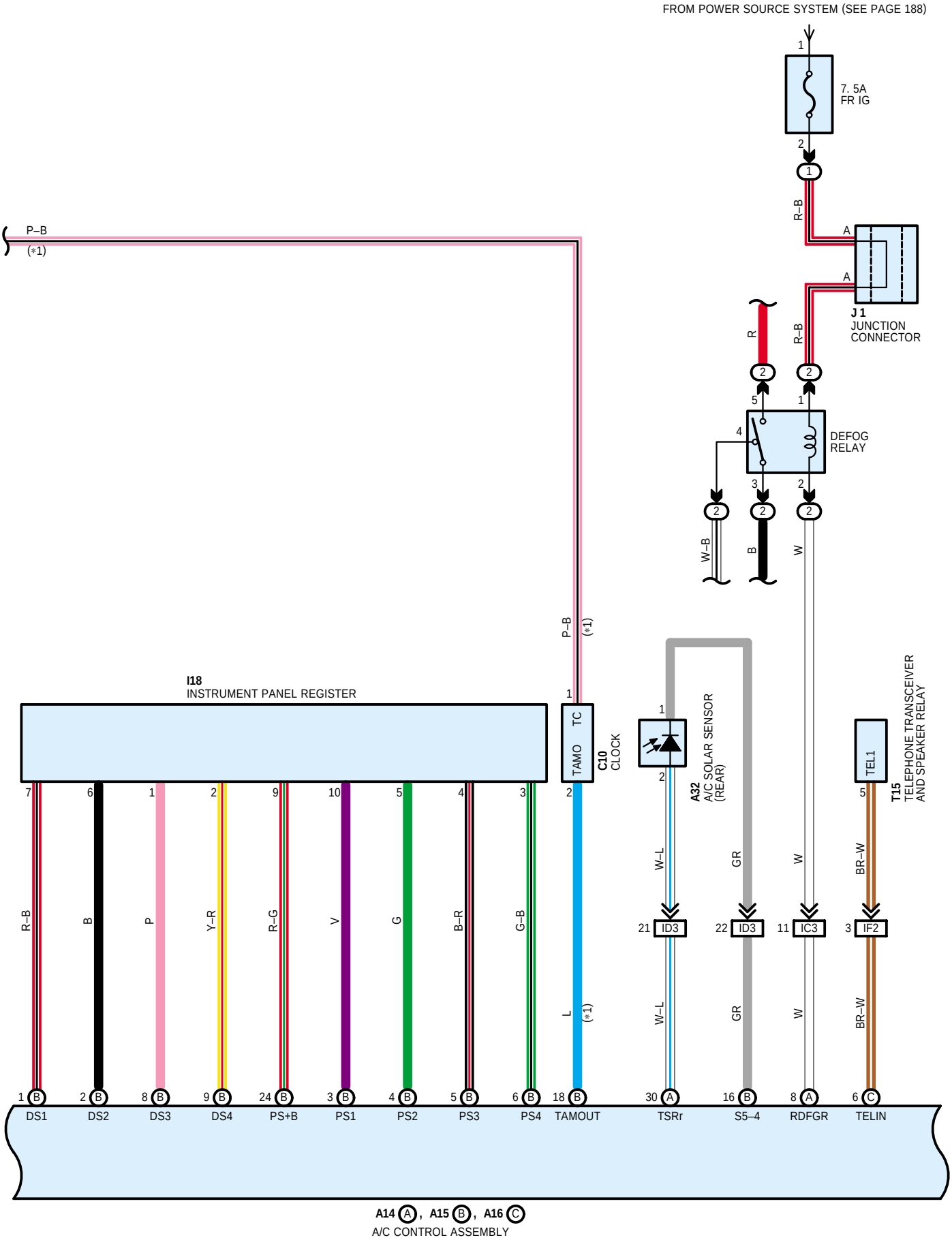
FROM POWER SOURCE SYSTEM (SEE PAGE 188)
7. 5A
FR IG
R–B
J 1
JUNCTION
CONNECTOR
P–B
(∗1)
R
DEFOG
RELAY
W–B
B
W
I18
INSTRUMENT PANEL REGISTER
TC
TAMO
C10
CLOCK
A32
A/C SOLAR SENSOR
(REAR)
T15
TELEPHONE TRANSCEIVER
AND SPEAKER RELAY
TEL1
W–L
GR
BR–W
ID3
IC3
IF2
DS1
DS2
DS3
DS4
PS+B
PS1
PS2
PS3
PS4
TAMOUT
TSRr
S5–4
RDFGR
TELIN
A14 A, A15 B, A16 C
A/C CONTROL ASSEMBLY

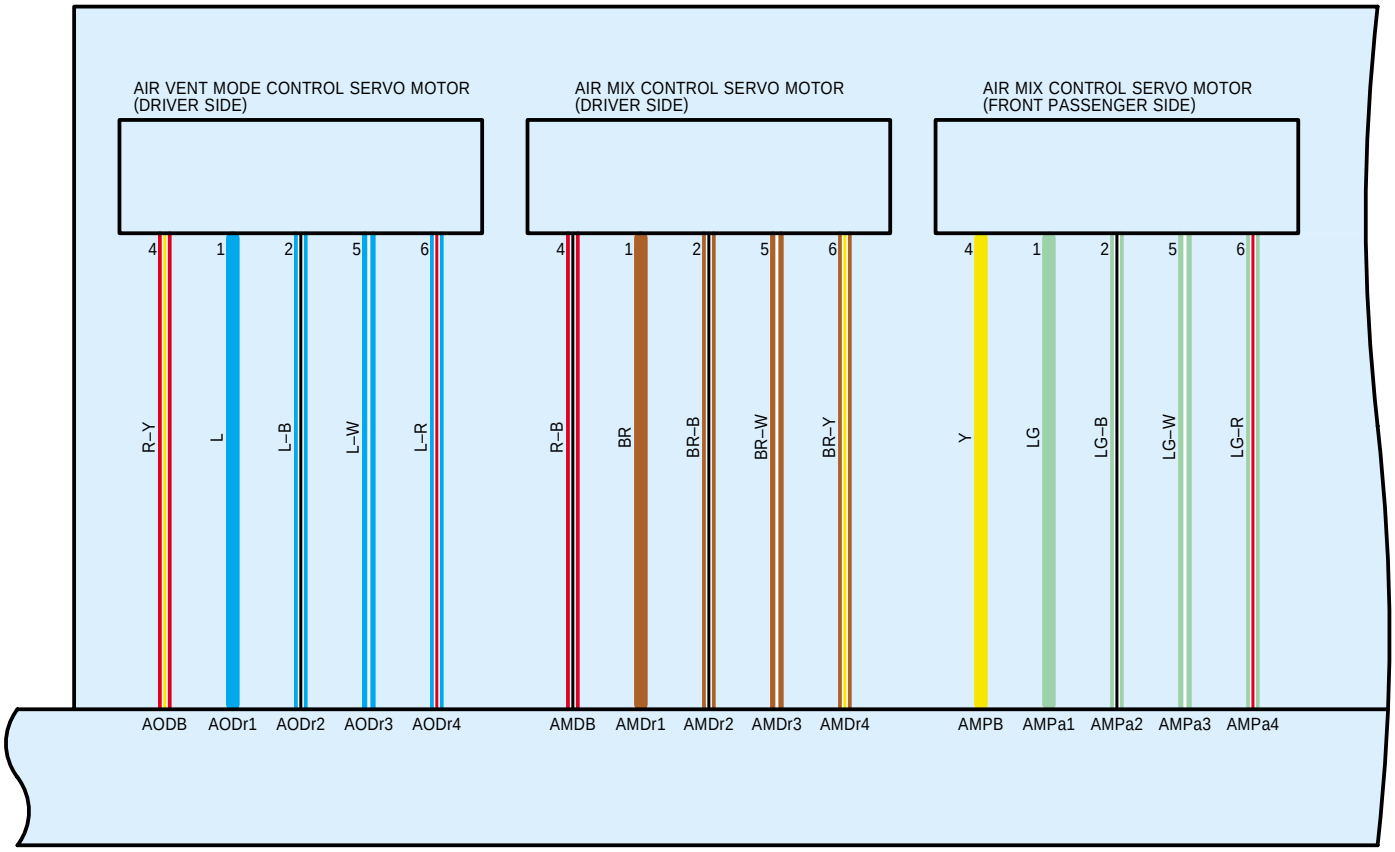

A14 (A), A15 (B), A16 (C)
A/C CONTROL ASSEMBLY

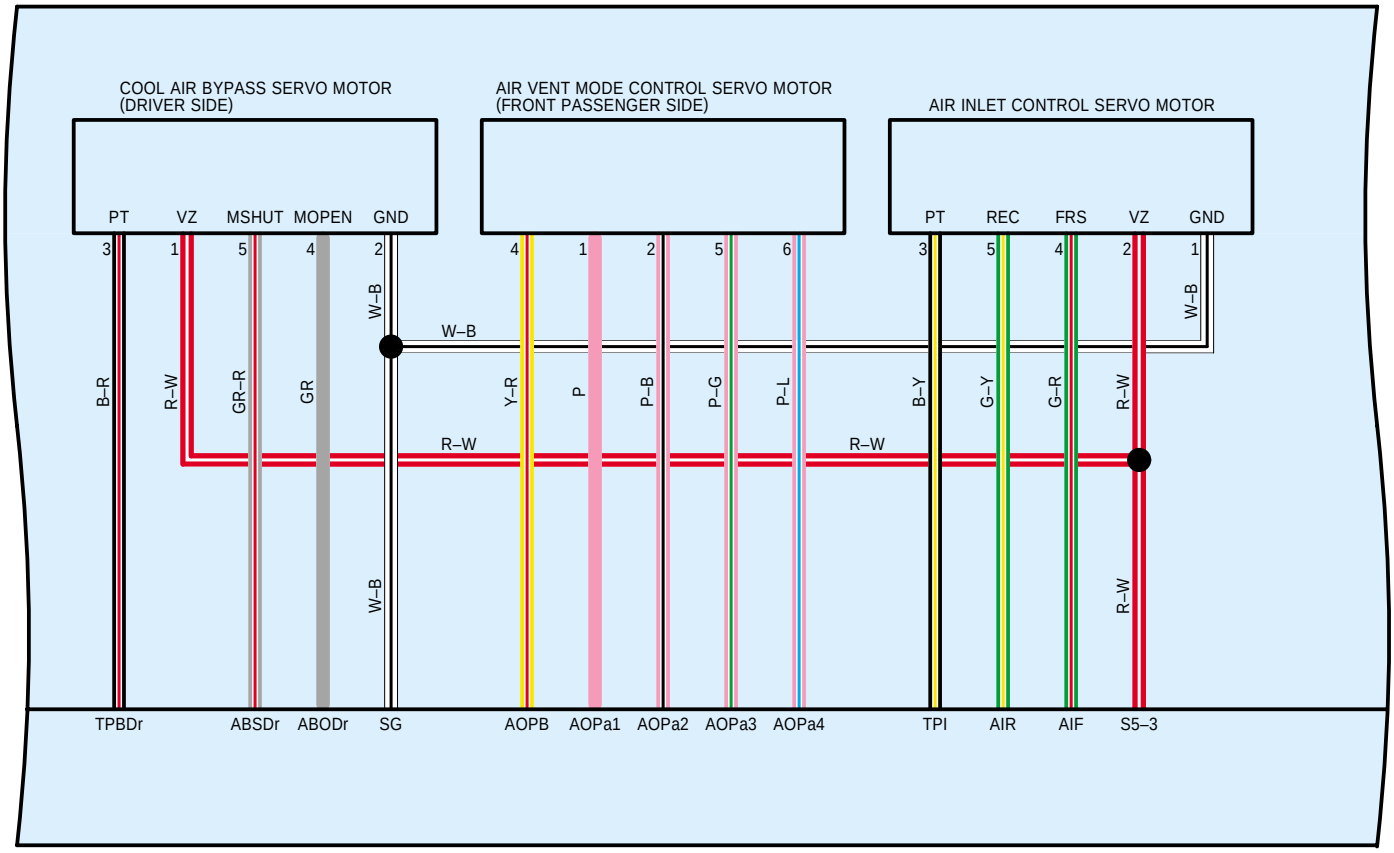

A14 (A), **A15** (B), **A16** (C)
A/C CONTROL ASSEMBLY

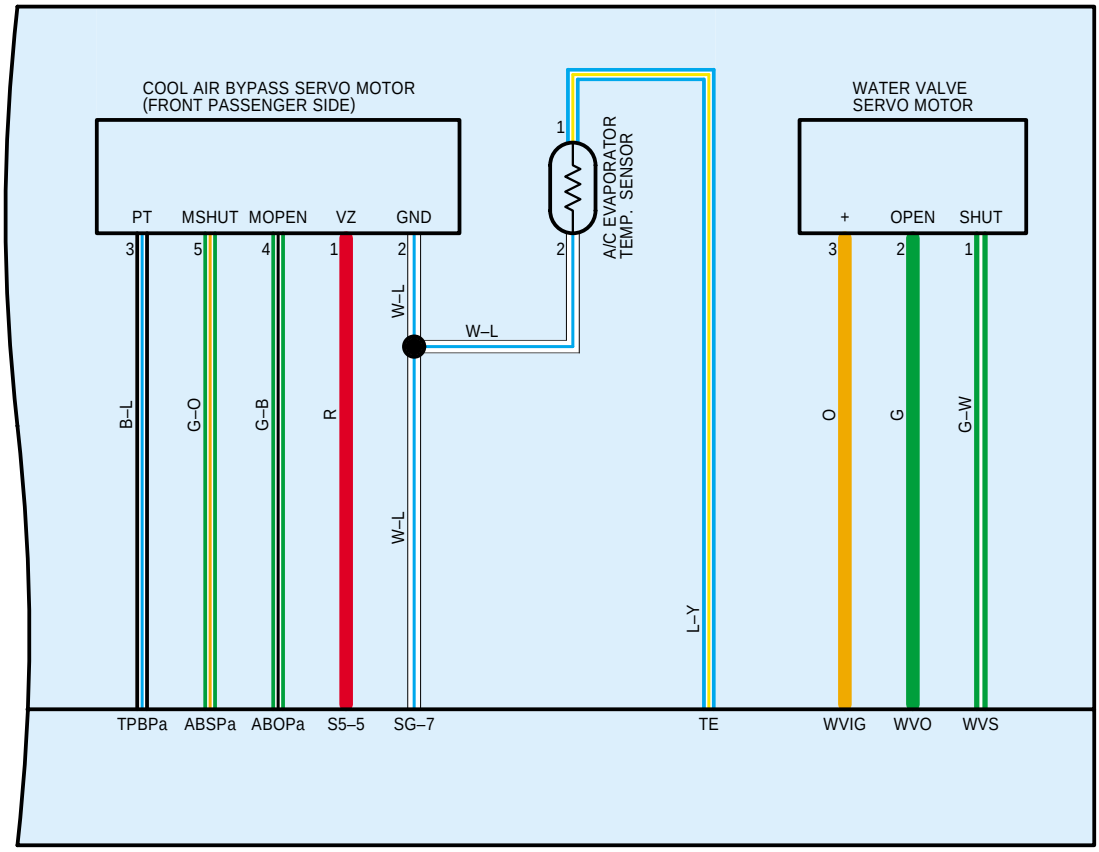

A14 (A), A15 (B), A16 (C)
A/C CONTROL ASSEMBLY