# 3GR-FE IGNITION



## General

- The Direct Ignition system(DIS) is used, in which an ignition coil with a built-in igniter is provided for every cylinder. This system enhances the ignition timing control precision and makes the ignition timing completely adjustment-free.
- Independent ignition coils are provided to each of the cylinders #1 to #6, thus making a distributor or high tension cord unnecessary. This reduces the power loss associated with high-voltage areas, improves reliability, and reduces electro-magnetic interference.

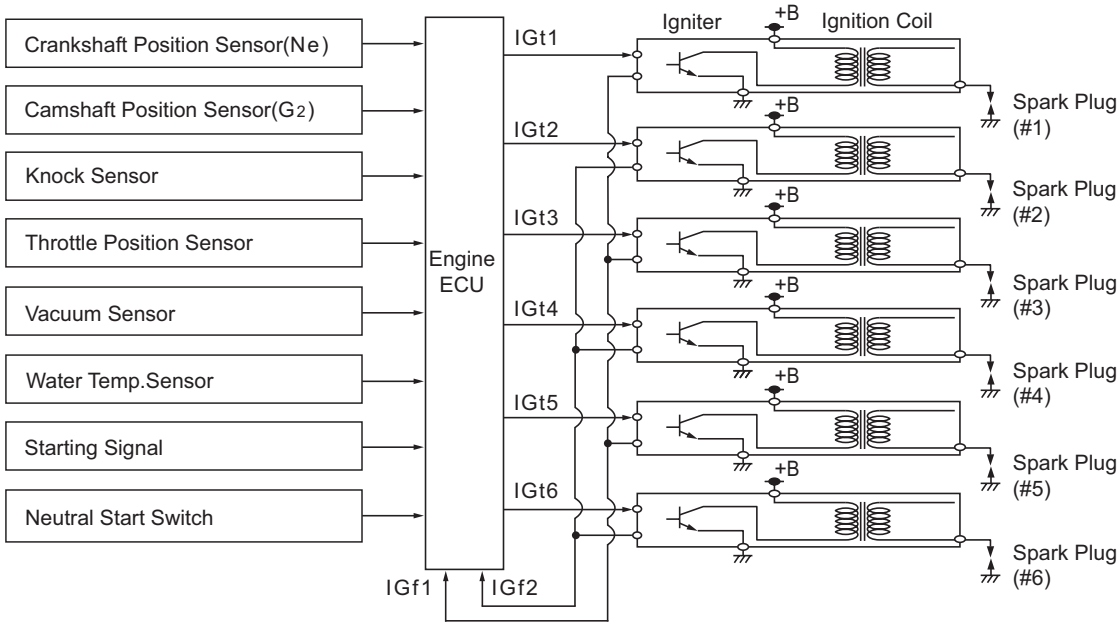


## Ignition Coil (with Igniter)
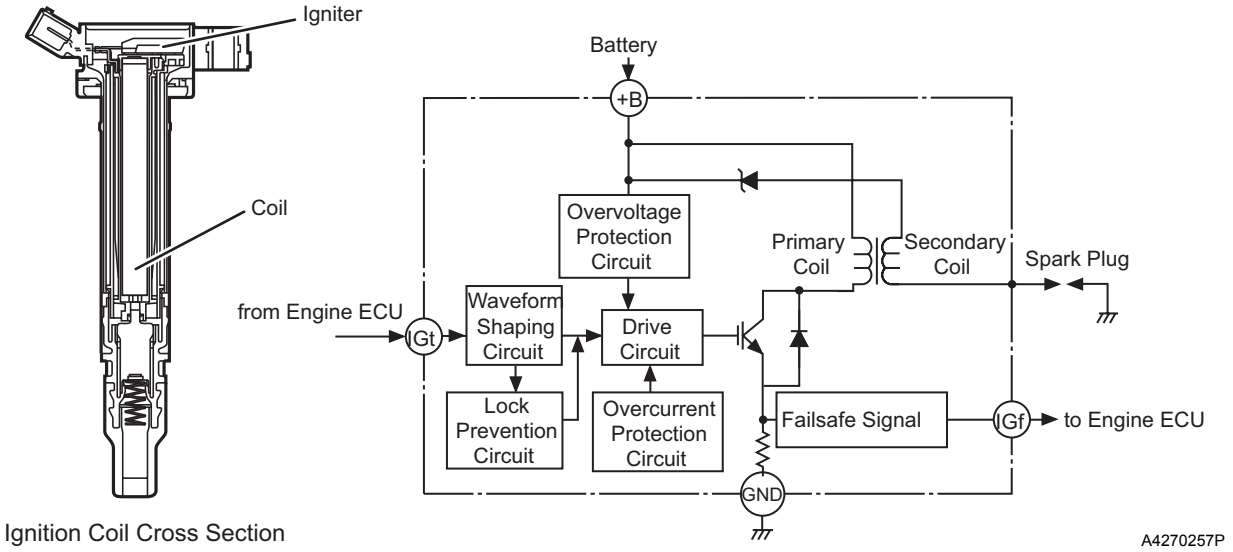
- Ignition coils with built-in igniters are used and placed directly over the spark plugs.