78

Wiring diagrams

Starting System, Charging System, Ignition System 78-2
Gauge Assembly (Gauges, Indicator Lights, Dash Lights Brightness Control 78-6
Gauge Assembly (Indicator Lights, Warning Lights) 78-10
Gauge Assembly (A/T Gear Position Indicator), Cruise Control System 78-14
Exterior Lights (With Front Fog Lights, Without Front Fog Lights or Rear Fog Lights 78-18
Exterior Lights (With Rear Fog Lights) 78-22
Exterior Lights (With Front and Rear Fog Lights) 78-26
Exterior Lights (With Daytime Running Lights and Rear Fog Light) 78-30
Exterior Lights (Back-up Lights, Brake Lights, Turn Signal/Hazard Flasher) 78-34
Exterior Lights (Headlight Adjuster System), Interior Lights, Horns 78-38
Power Mirror 78-42
Sunroof, Power Windows 78-46
Power Window, Cigarette Lighter, Accessory Power Socket 78-50
Navigation System, Stereo Sound System 78-54
Seat Heater, Wipers/Washers (Headlight Washer) 78-58
Wipers/Washers (Windshield Rear) 78-62
Multiplex Control System (Fog Light Control, Immobilizer Control, Interlock Control, Intermittent Wiper Control, Entry Lights Control) 78-66
Keyless/Power Door Lock System (With Super locking System) 78-70
Keyless/Power Door Lock System (Without Super locking System) 78-74
Security Alarm System (With Super Locking System) 78-78
Security Alarm System (Without Super Locking System) 78-82
Interlock System, ABS 78-86
SRS 78-90
Fan Controls, HVAC 78-94
PGM-FI System, Immobilizer System 78-98
PGM-FI System 78-102
PGM-FI System (A/T) 78-106

Starting System, Charging System, Ignition System

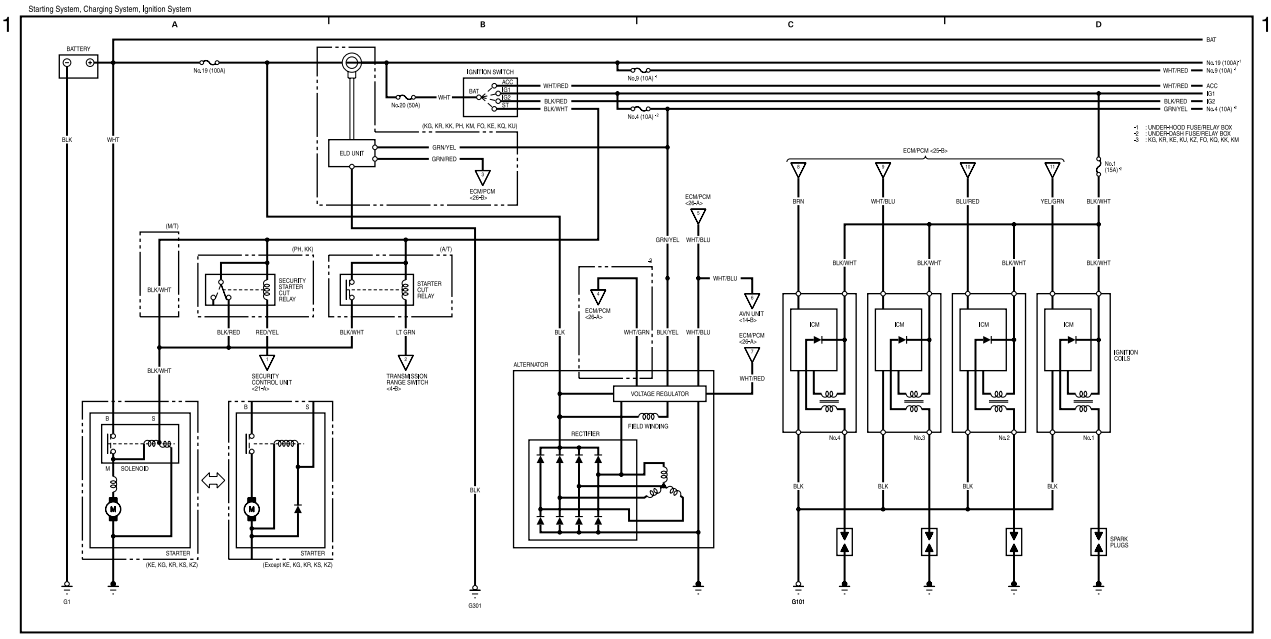

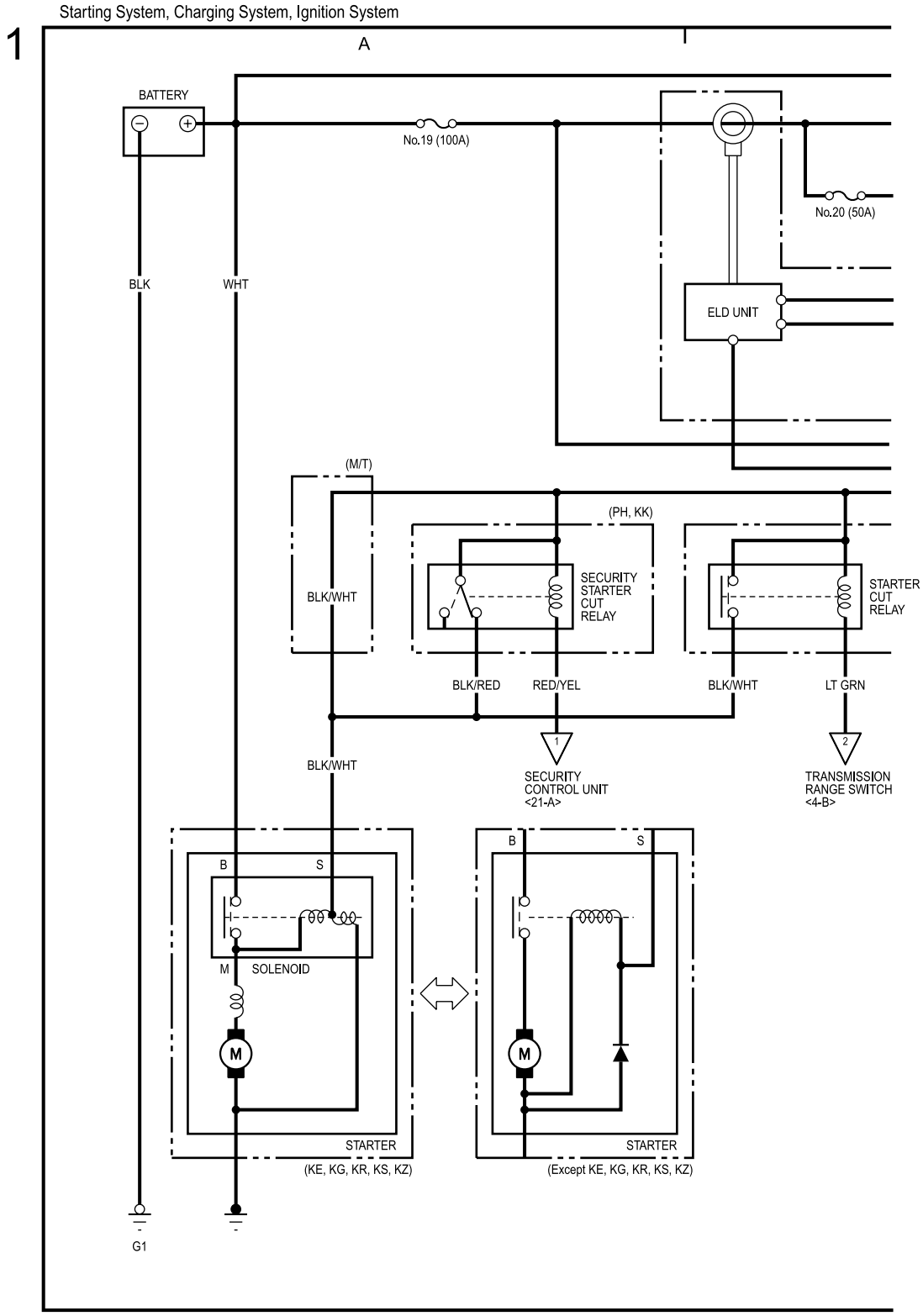
Starting System, Charging System, Ignition System
1
A
BATTERY
No.19 (100A)
No.20 (50A)
BLK
WHT
ELD UNIT
(M/T)
(PH, KK)
BLK/WHT
SECURITY STARTER CUT RELAY
STARTER CUT RELAY
BLK/RED
RED/YEL
BLK/WHT
LT GRN
BLK/WHT
SECURITY CONTROL UNIT <21-A>
TRANSMISSION RANGE SWITCH <4-B>
B
S
M
SOLENOID
STARTER
(KE, KG, KR, KS, KZ)
(Except KE, KG, KR, KS, KZ)
G1

Starting System, Charging System, Ignition System (cont'd)

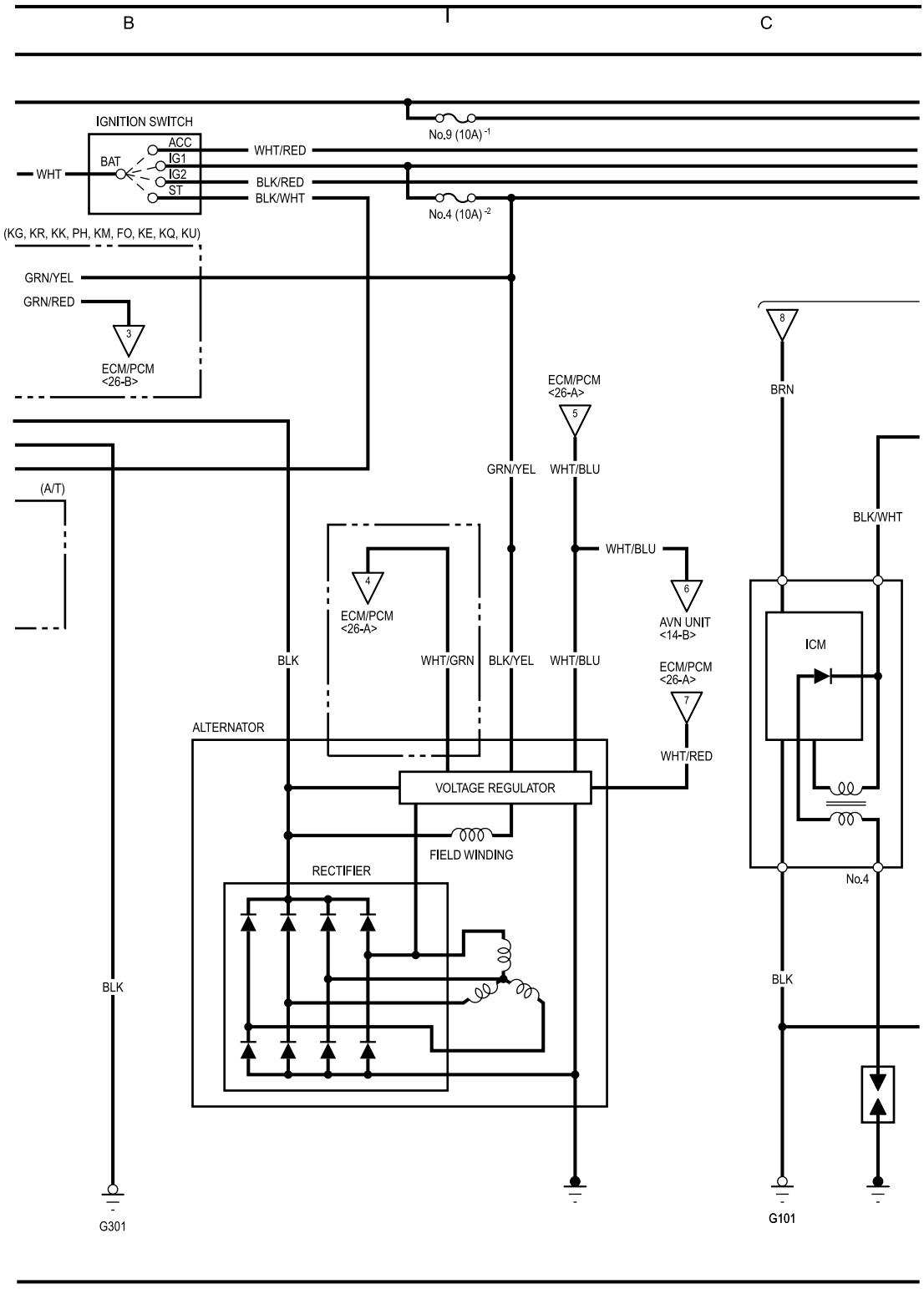

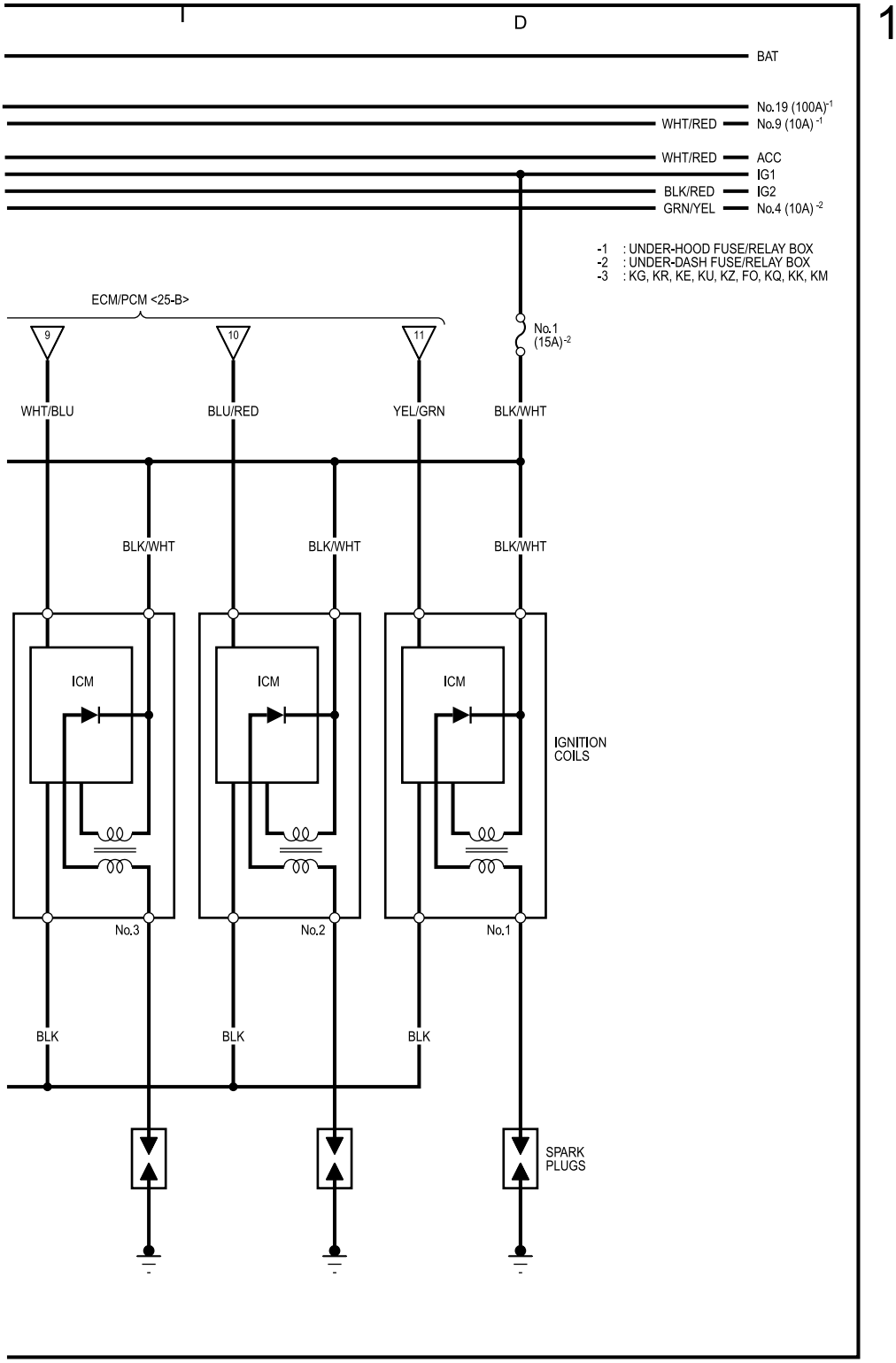
I
D
1
BAT
No.19 (100A)-1
WHT/RED
No.9 (10A) -1
WHT/RED
ACC
IG1
BLK/RED
IG2
GRN/YEL
No.4 (10A) -2
-1 : UNDER-HOOD FUSE/RELAY BOX
-2 : UNDER-DASH FUSE/RELAY BOX
-3 : KG, KR, KE, KU, KZ, FO, KQ, KK, KM
ECM/PCM <25-B>
9
10
11
No.1
(15A)-2
WHT/BLU
BLU/RED
YEL/GRN
BLK/WHT
BLK/WHT
BLK/WHT
BLK/WHT
ICM
ICM
ICM
IGNITION
COILS
No.3
No.2
No.1
BLK
BLK
BLK
SPARK
PLUGS

Gauge Assembly (Gauges, Indicator Lights, Dash Lights Brightness Control

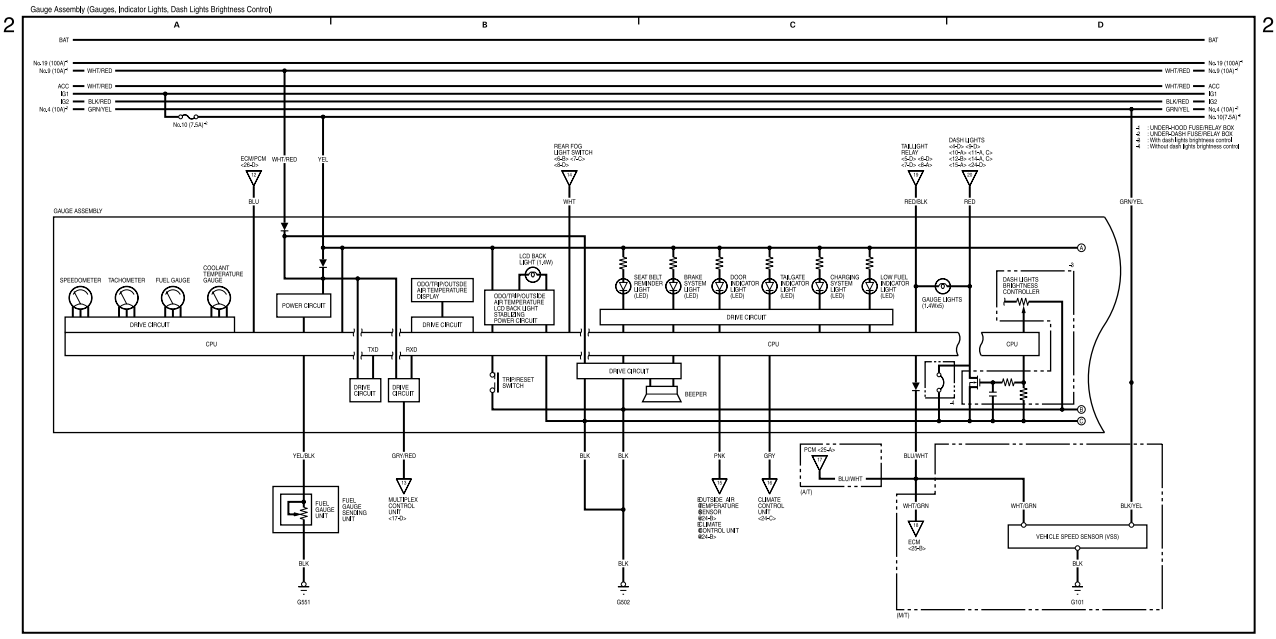

Gauge Assembly (Gauges, Indicator Lights, Dash Lights Brightness Control) (cont'd)

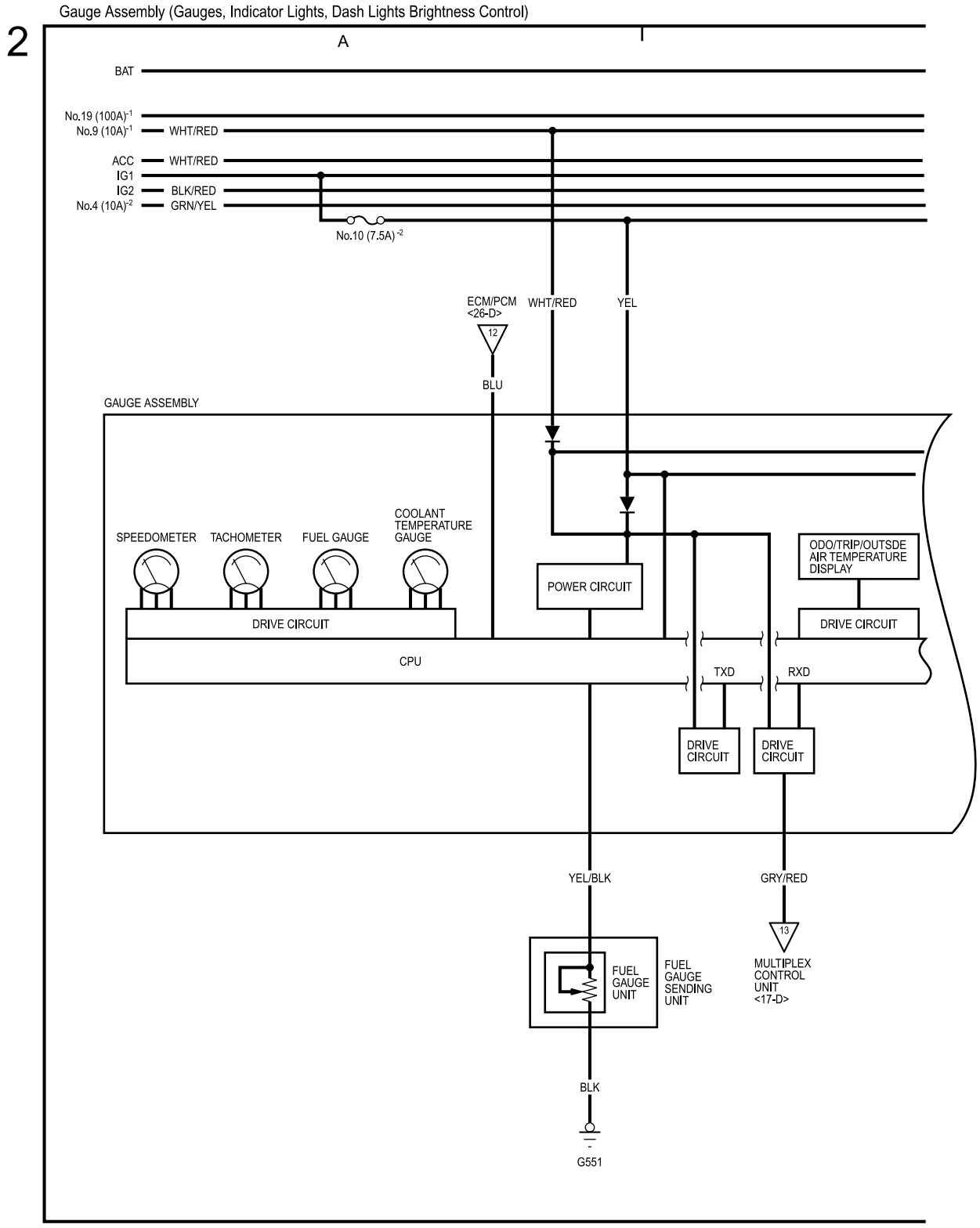

Gauge Assembly (Gauges, Indicator Lights, Dash Lights Brightness Control) (cont'd)

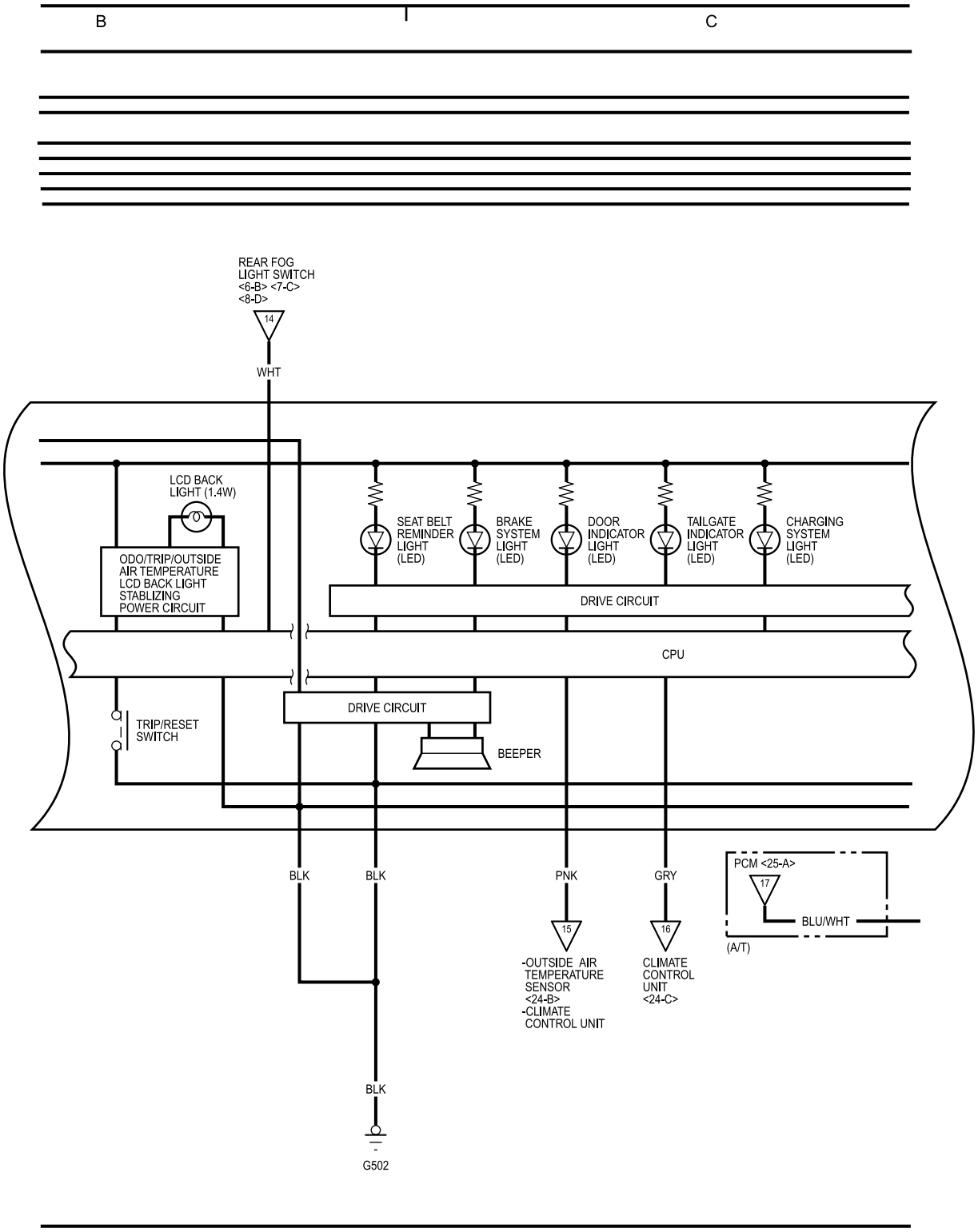

Gauge Assembly (Gauges, Indicator Lights, Dash Lights Brightness Control) (cont'd)

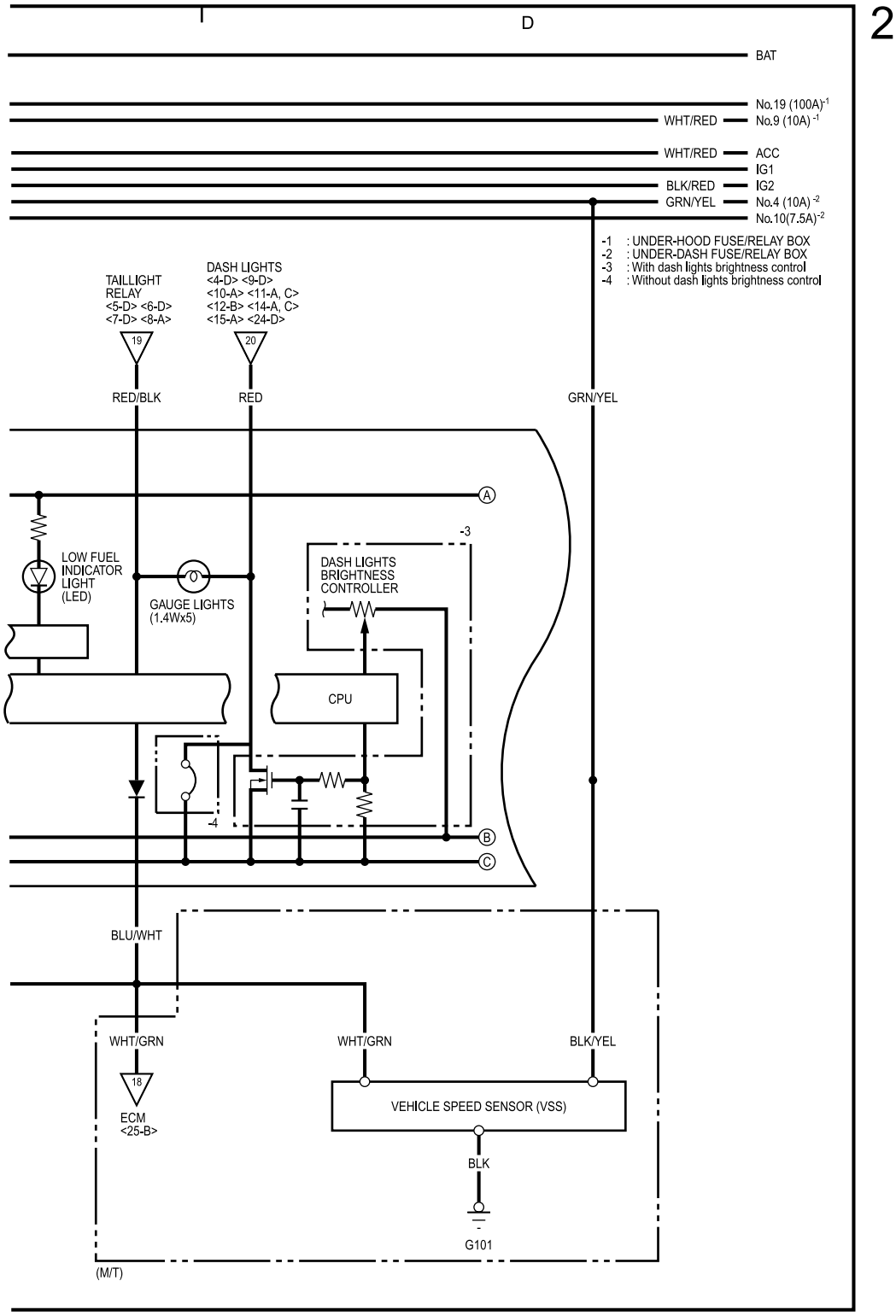

Gauge Assembly (Indicator Lights, Warning Lights)

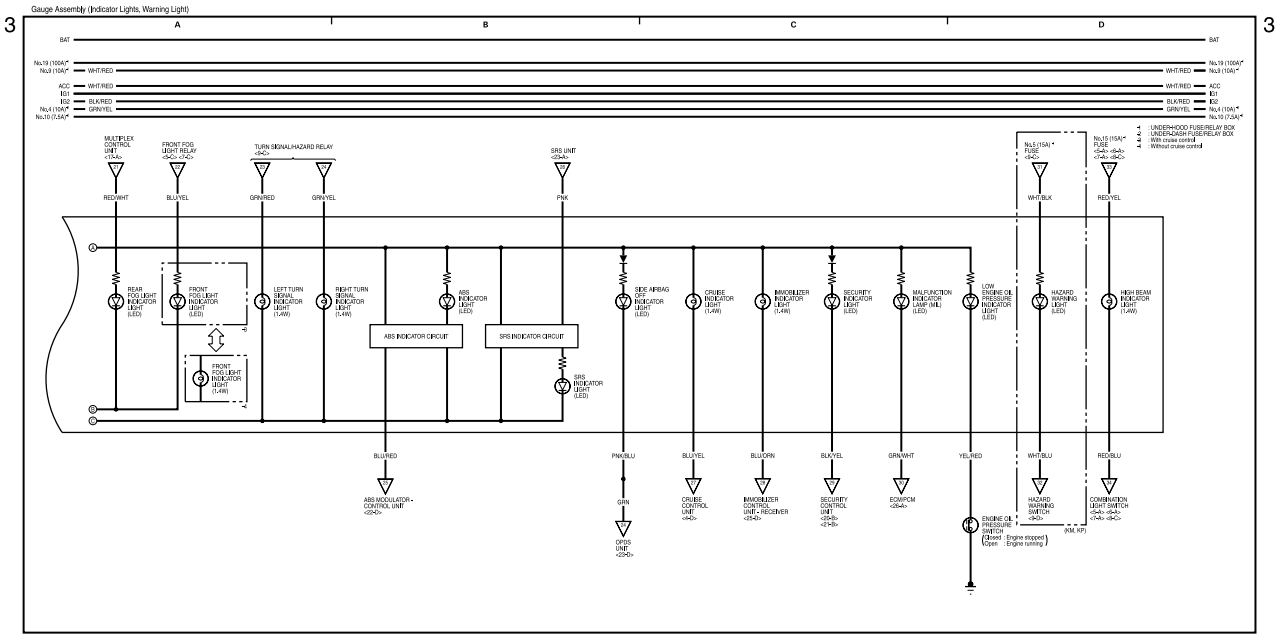

Gauge Assembly (Indicator Lights, Warning Lights) (cont'd)

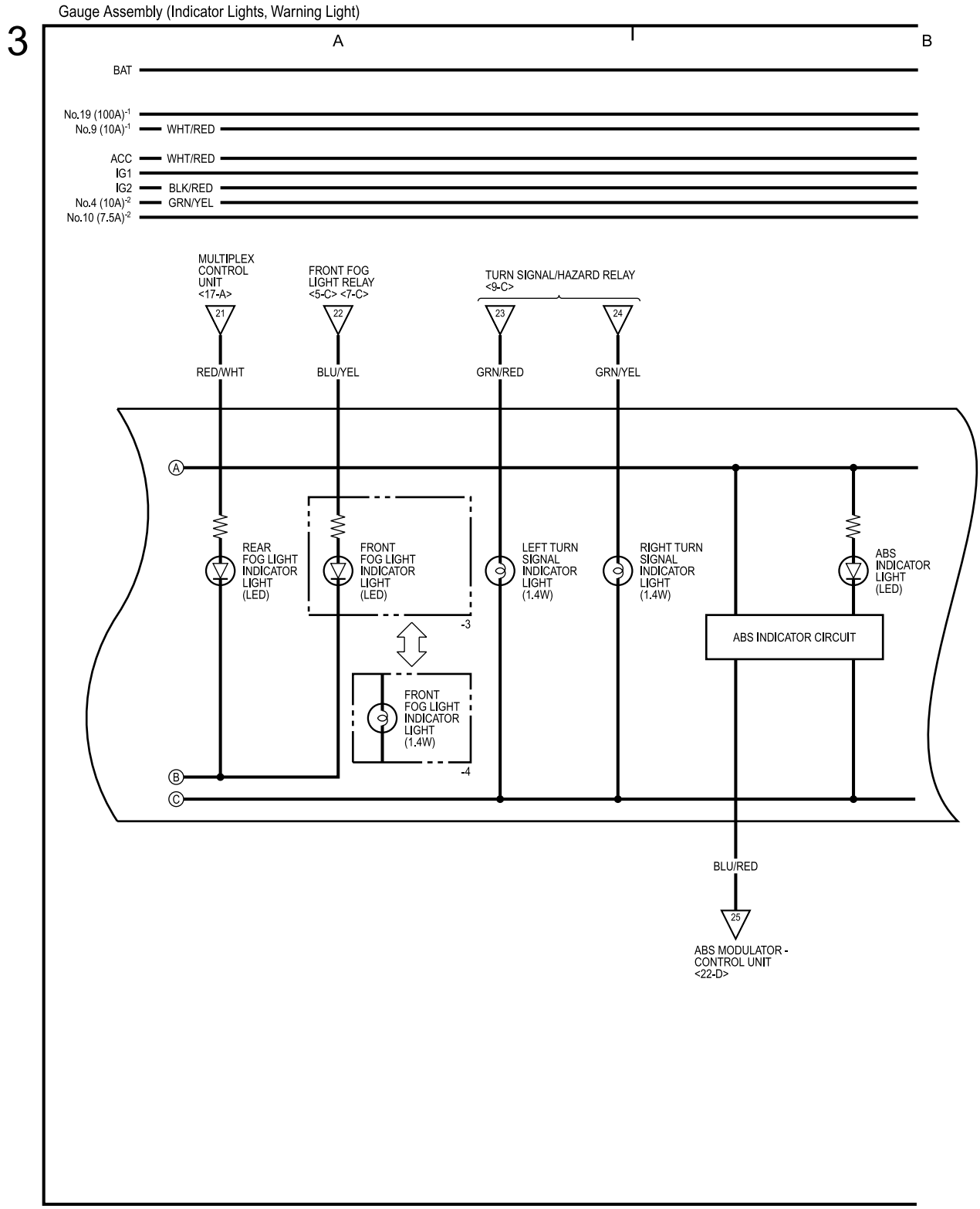

Gauge Assembly (Indicator Lights, Warning Lights) (cont'd)

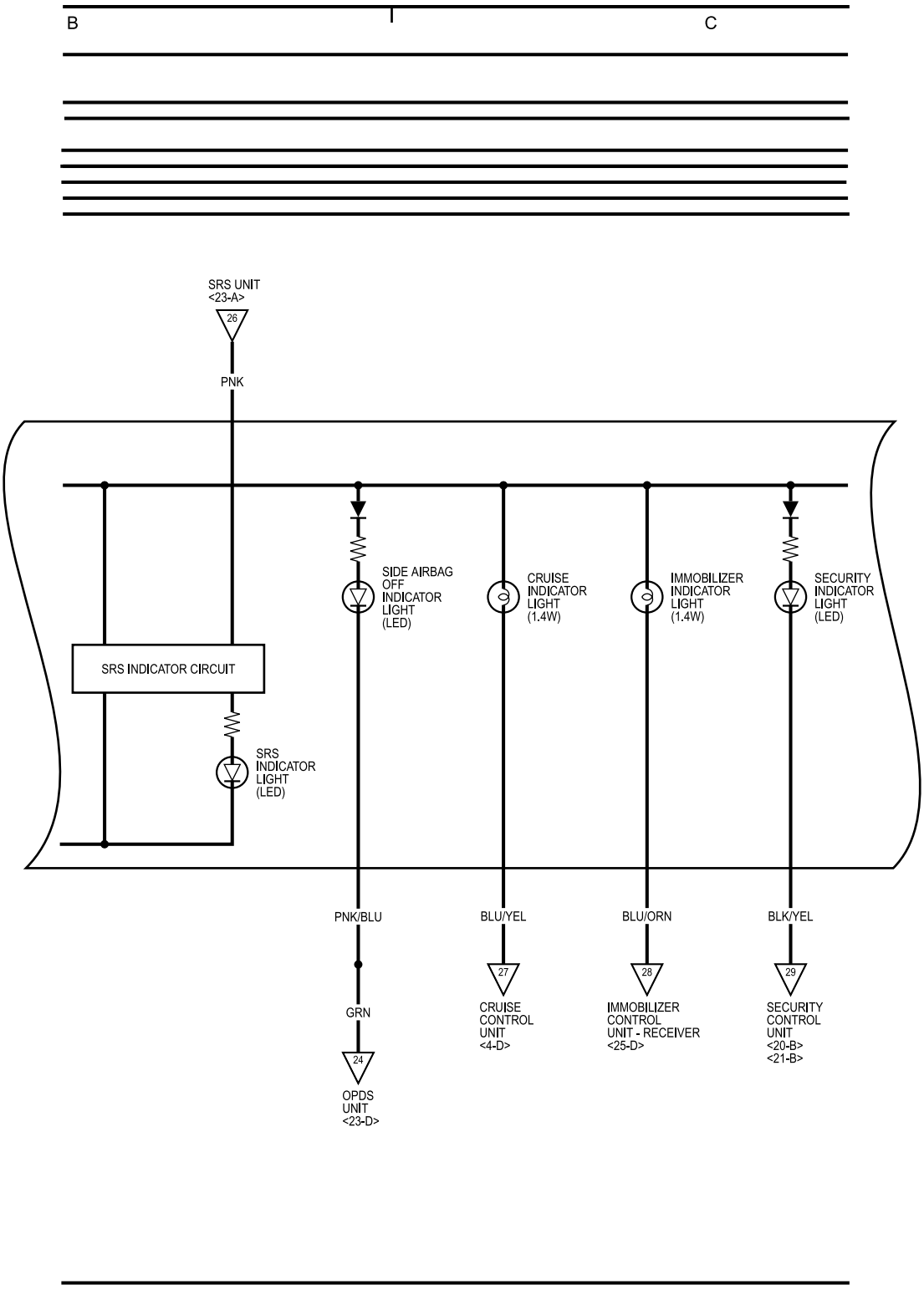

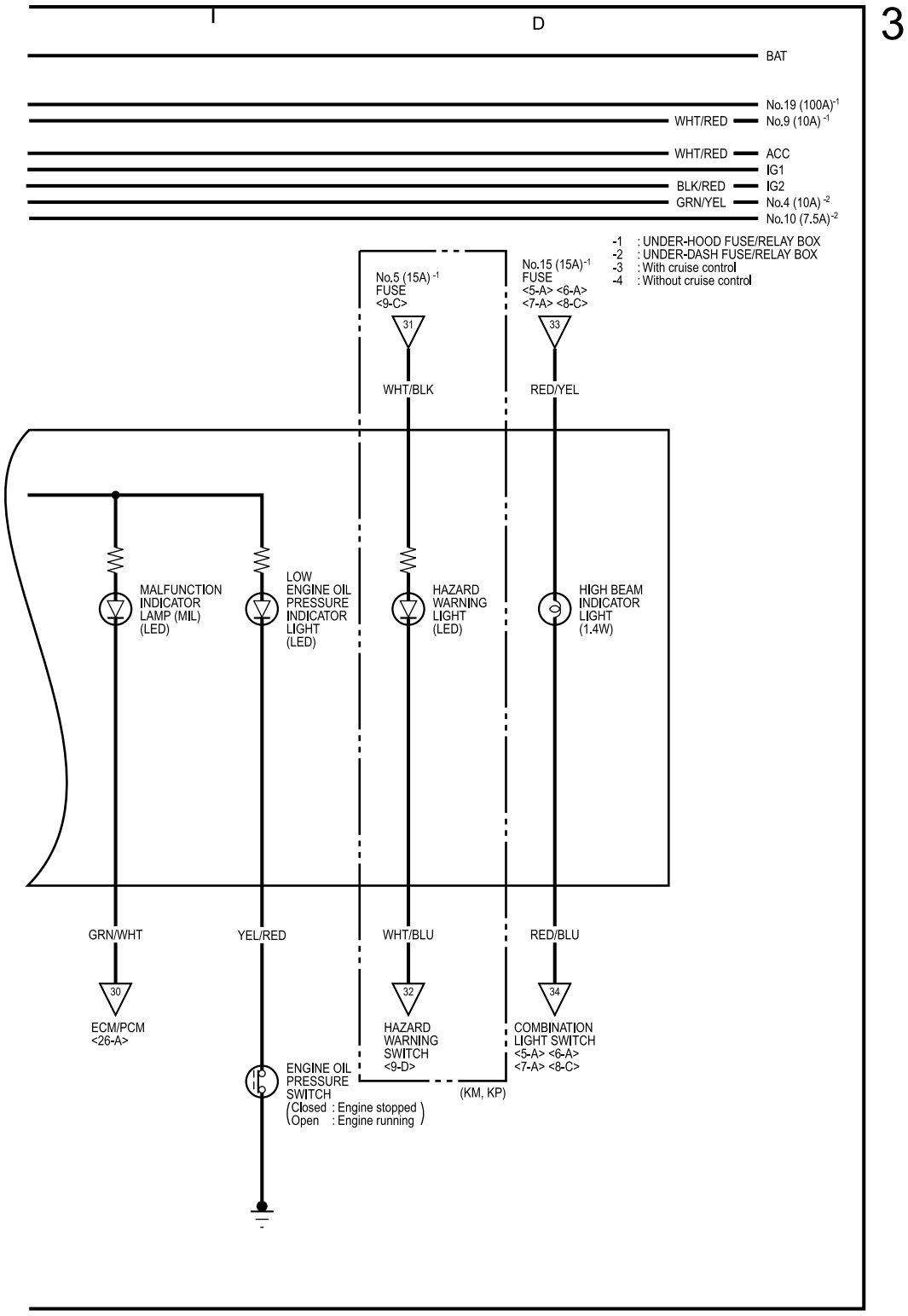
I
D
3
BAT
No.19 (100A)-1
WHT/RED
No.9 (10A) -1
WHT/RED
ACC
IG1
BLK/RED
IG2
GRN/YEL
No.4 (10A) -2
No.10 (7.5A)-2
-1 : UNDER-HOOD FUSE/RELAY BOX
-2 : UNDER-DASH FUSE/RELAY BOX
-3 : With cruise control
-4 : Without cruise control
No.5 (15A) -1
FUSE
<9-C>
No.15 (15A)-1
FUSE
<5-A> <6-A>
<7-A> <8-C>
31
33
WHT/BLK
RED/YEL
MALFUNCTION
INDICATOR
LAMP (MIL)
(LED)
LOW
ENGINE OIL
PRESSURE
INDICATOR
LIGHT
(LED)
HAZARD
WARNING
LIGHT
(LED)
HIGH BEAM
INDICATOR
LIGHT
(1.4W)
GRN/WHT
YEL/RED
WHT/BLU
RED/BLU
30
32
34
ECM/PCM
<26-A>
HAZARD
WARNING
SWITCH
<9-D>
COMBINATION
LIGHT SWITCH
<5-A> <6-A>
<7-A> <8-C>
ENGINE OIL
PRESSURE
SWITCH
(Closed : Engine stopped
Open : Engine running)
(KM, KP)

Gauge Assembly (A/T Gear Position Indicator), Cruise Control System

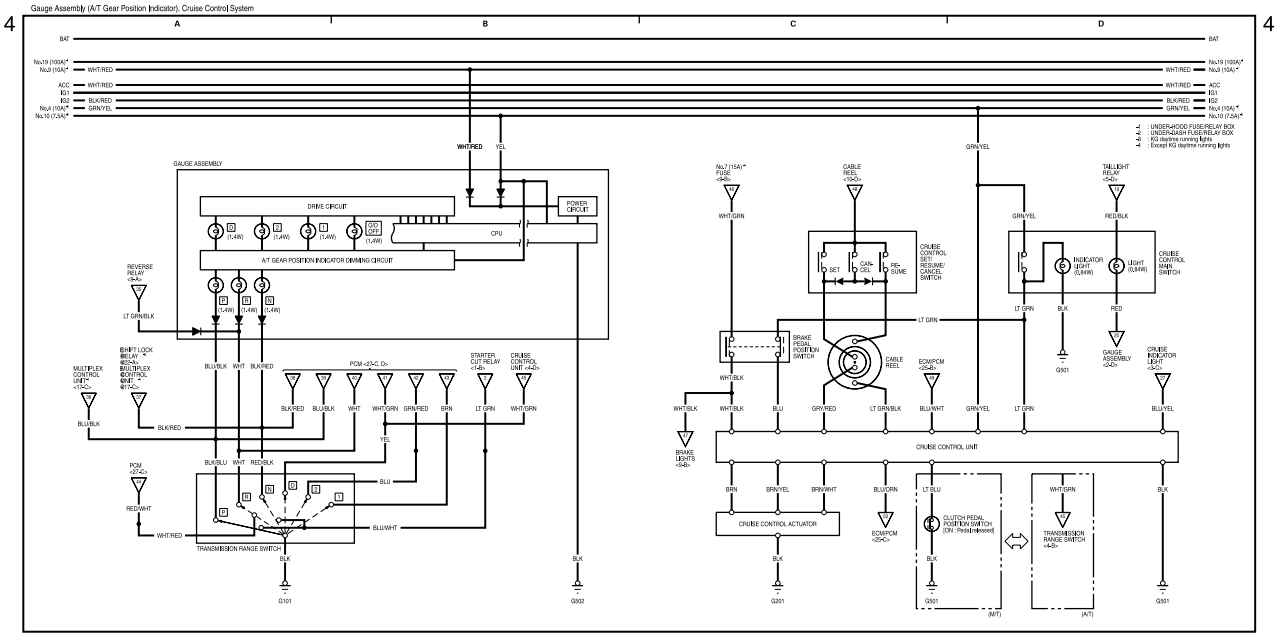

Gauge Assembly (A/T Gear Position Indicator), Cruise Control System (cont'd)

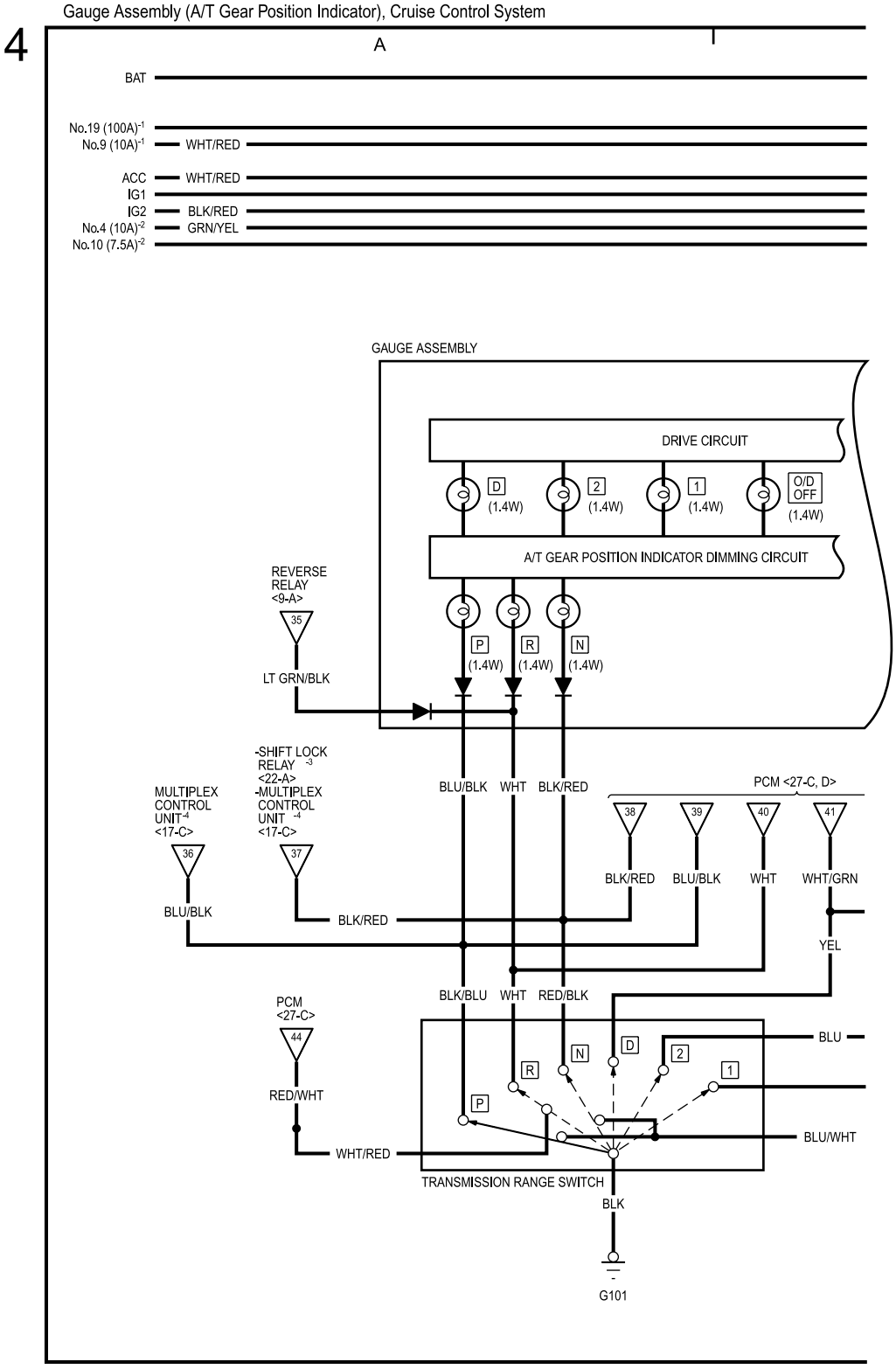

Gauge Assembly (A/T Gear Position Indicator), Cruise Control System (cont'd)

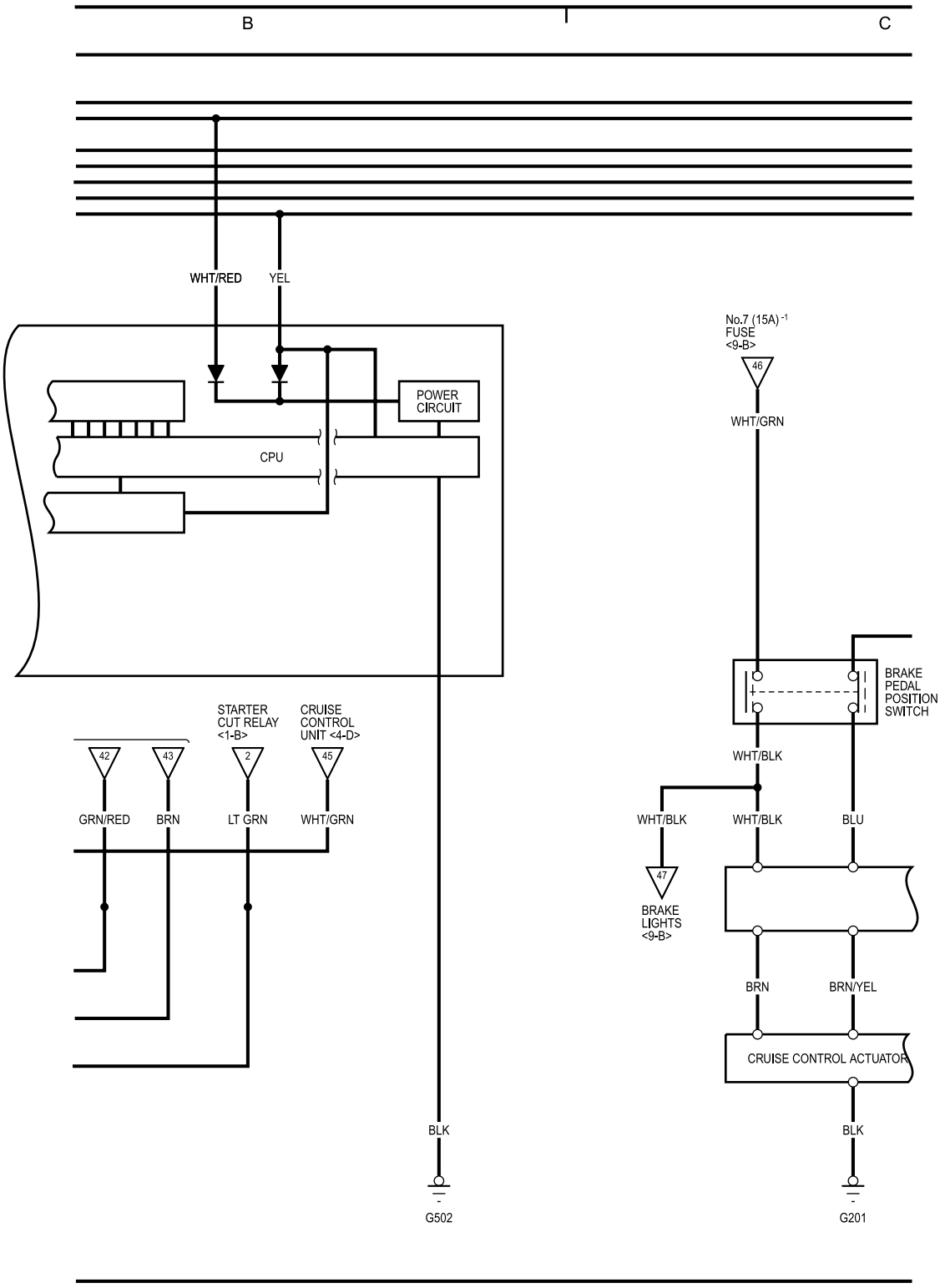

Gauge Assembly (A/T Gear Position Indicator), Cruise Control System (cont'd)

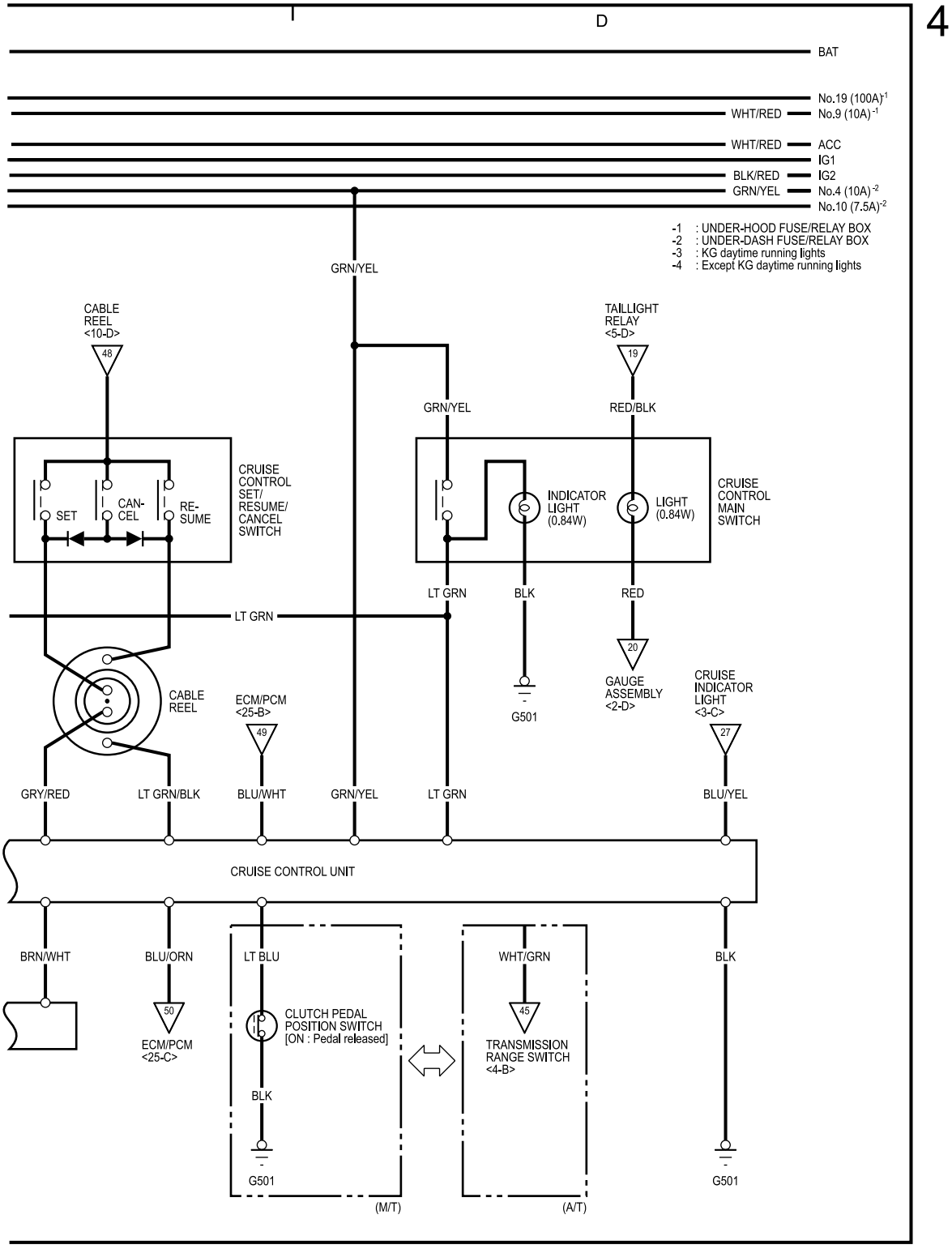

Exterior Lights (With Front Fog Lights, Without Front Fog Lights or Rear Fog Lights

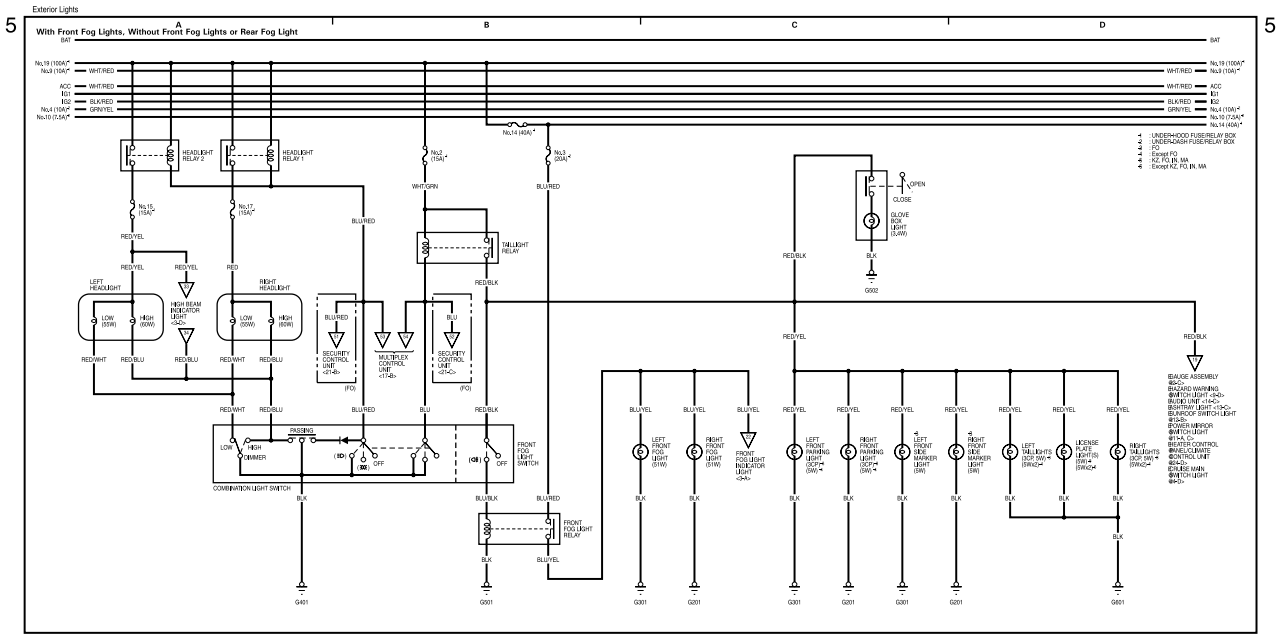

Exterior Lights (With Front Fog Lights, Without Front Fog Lights or Rear Fog Light) (cont'd)

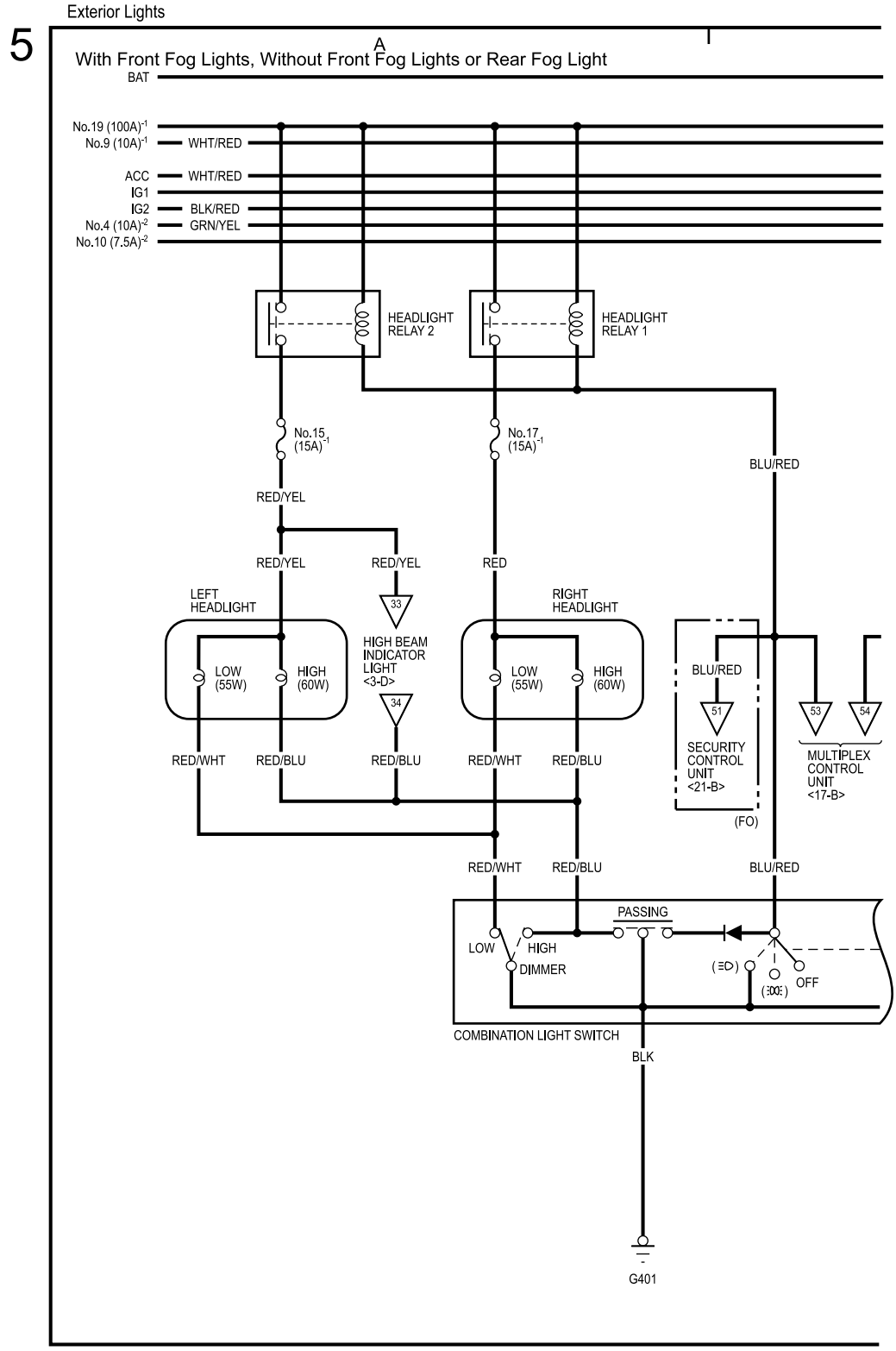

Exterior Lights (With Front Fog Lights, Without Front Fog Lights or Rear Fog Light) (cont'd)

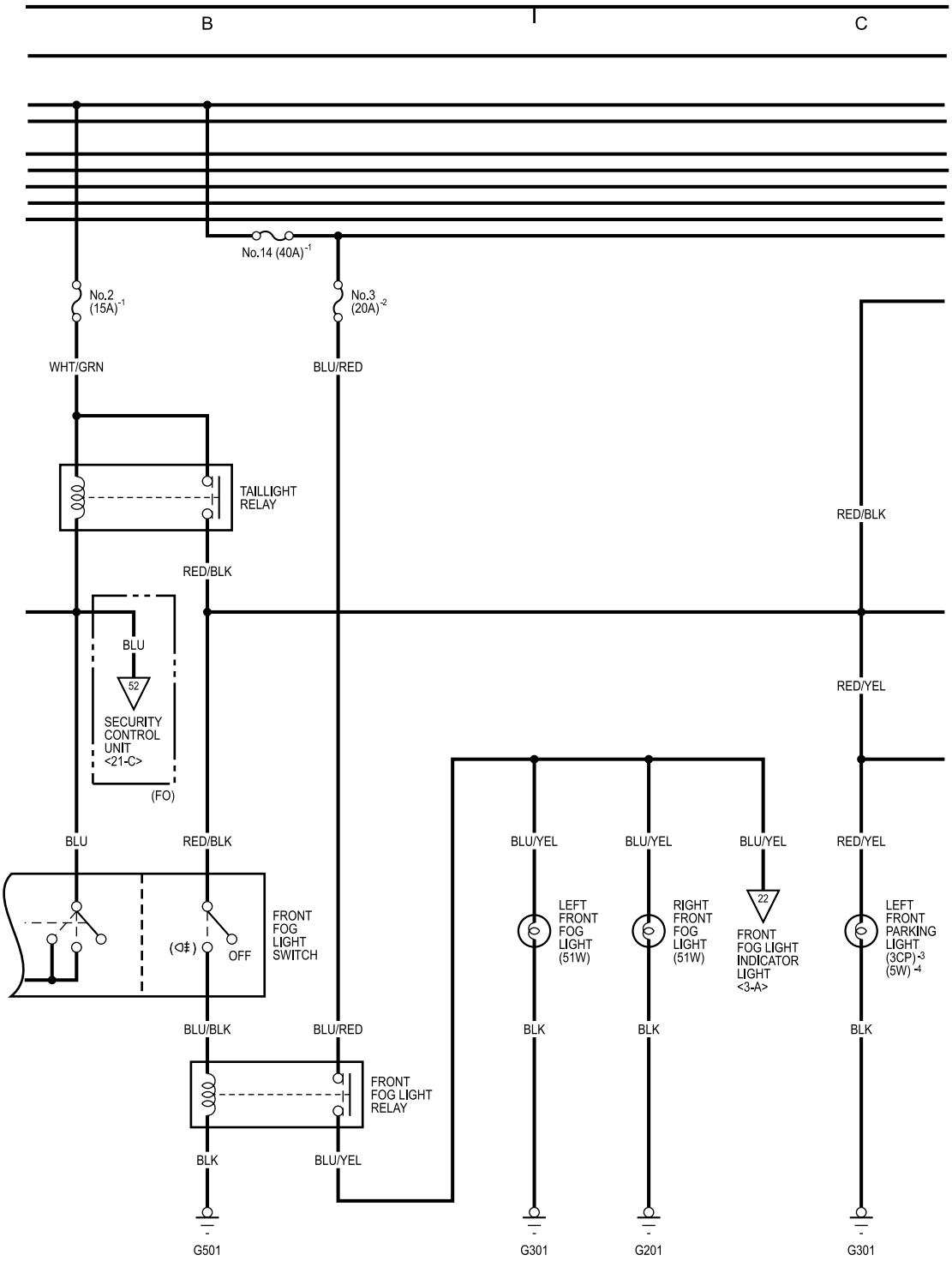

Exterior Lights (With Front Fog Lights, Without Front Fog Lights or Rear Fog Light) (cont'd)

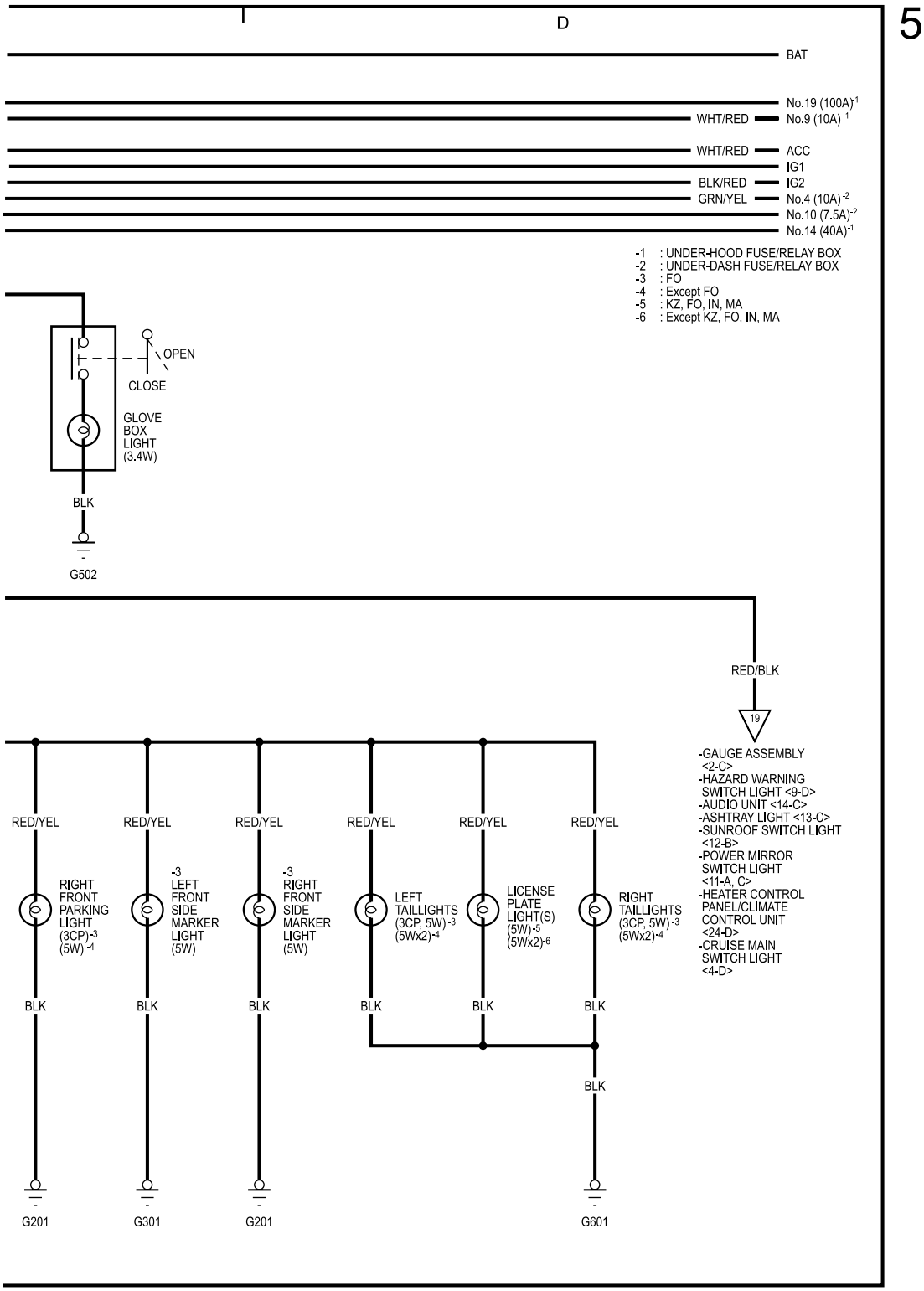

Exterior Lights (With Rear Fog Lights)

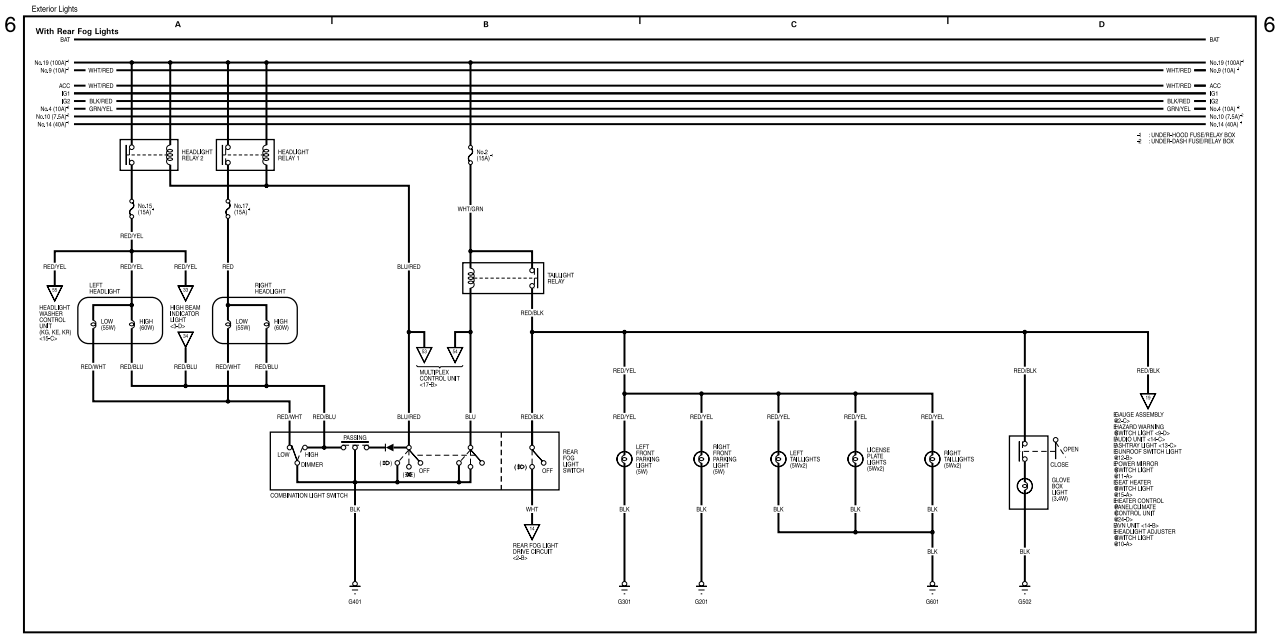

Exterior Lights (With Rear Fog Lights) (cont'd)

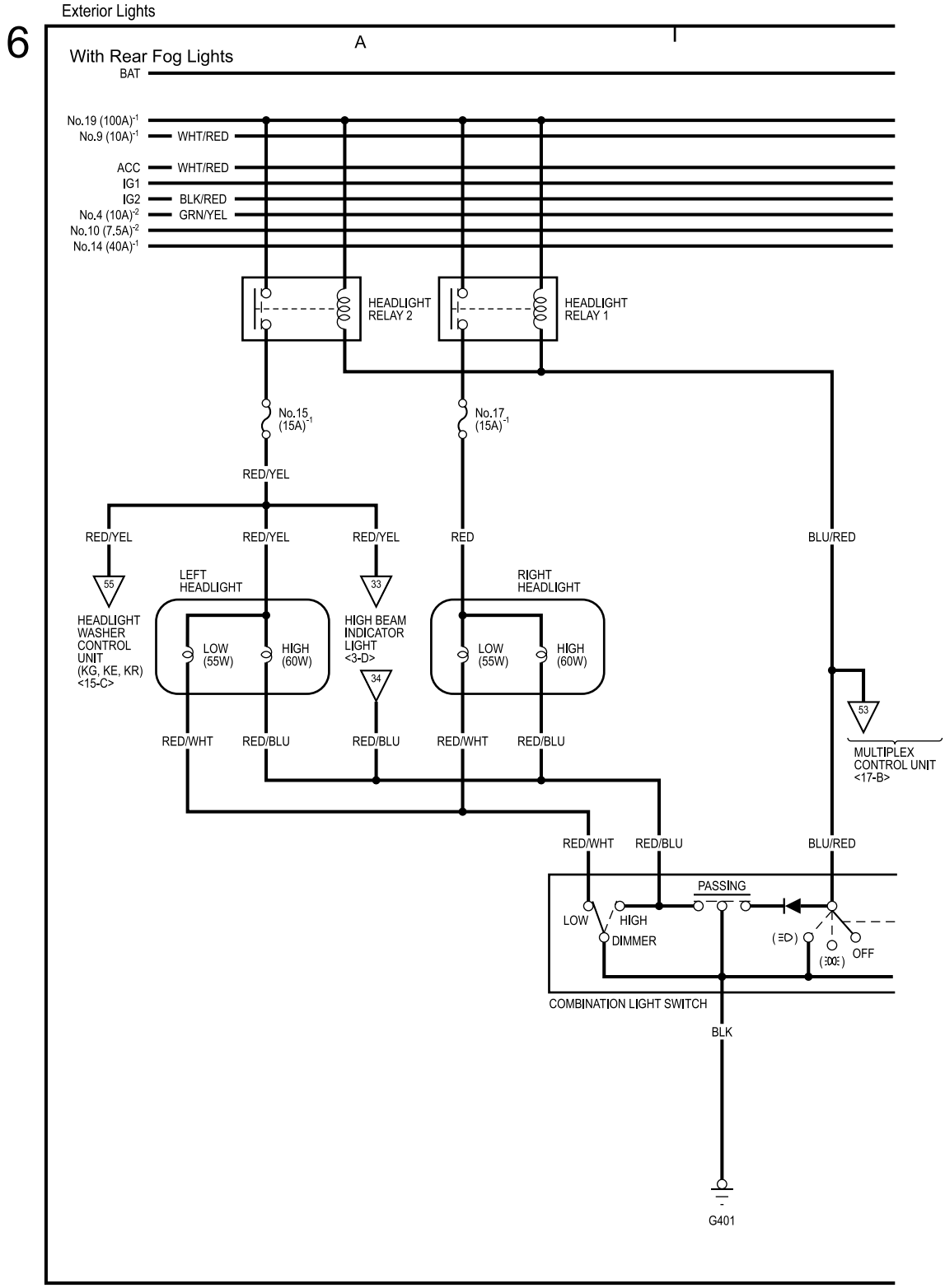

Exterior Lights (With Rear Fog Lights) (cont'd)

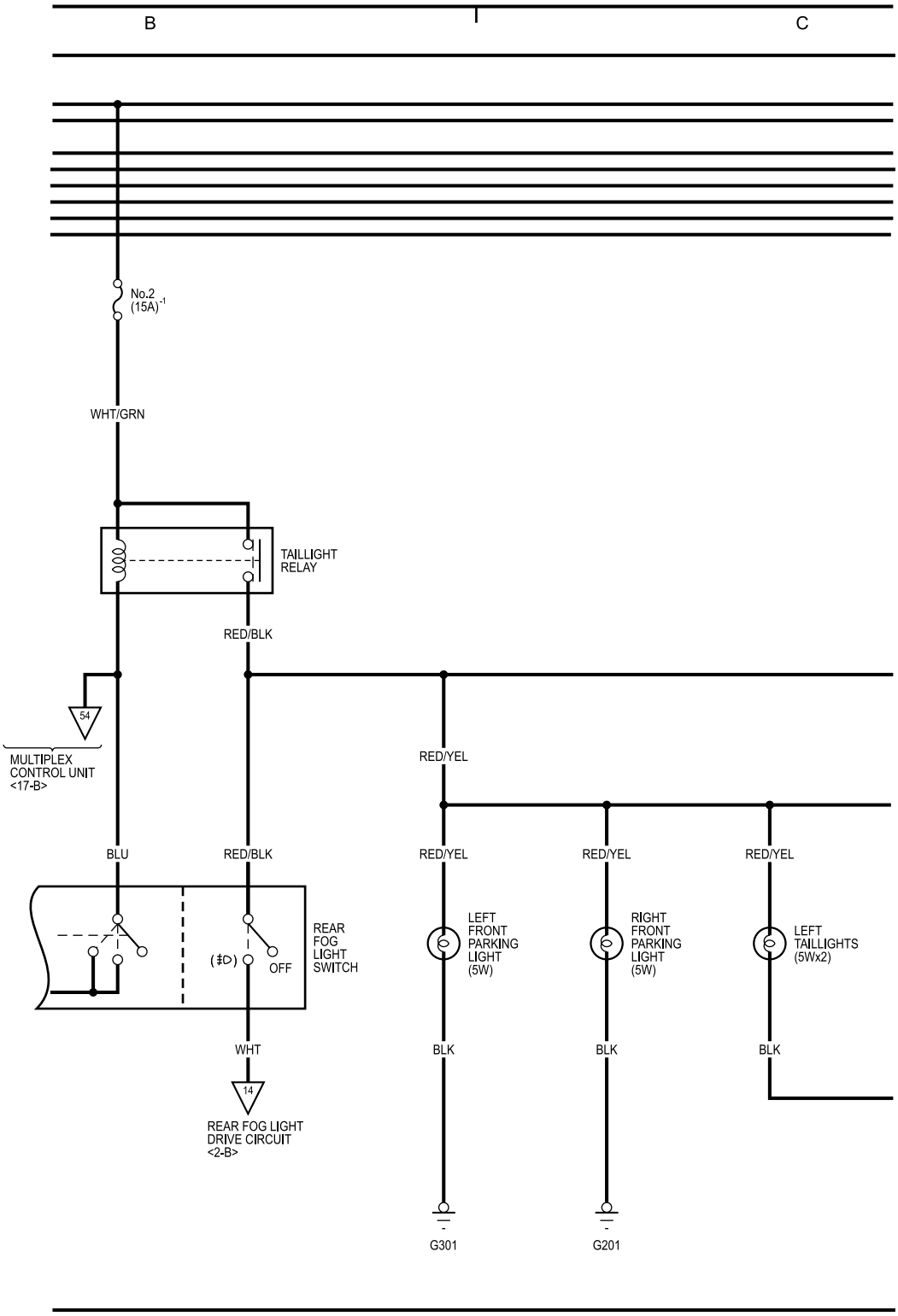

Exterior Lights (With Rear Fog Lights) (cont'd)

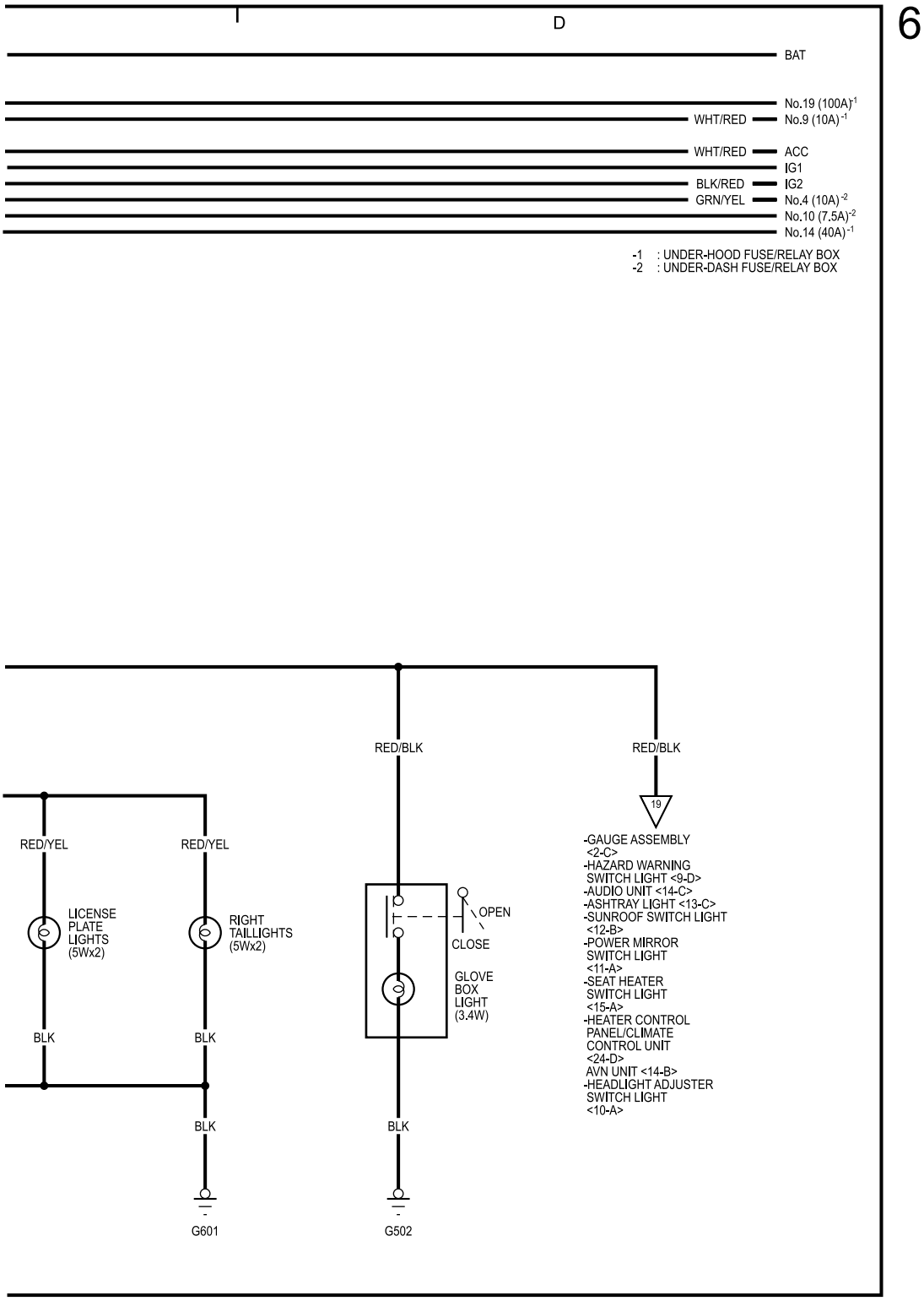

Exterior Lights (With Front and Rear Fog Lights)

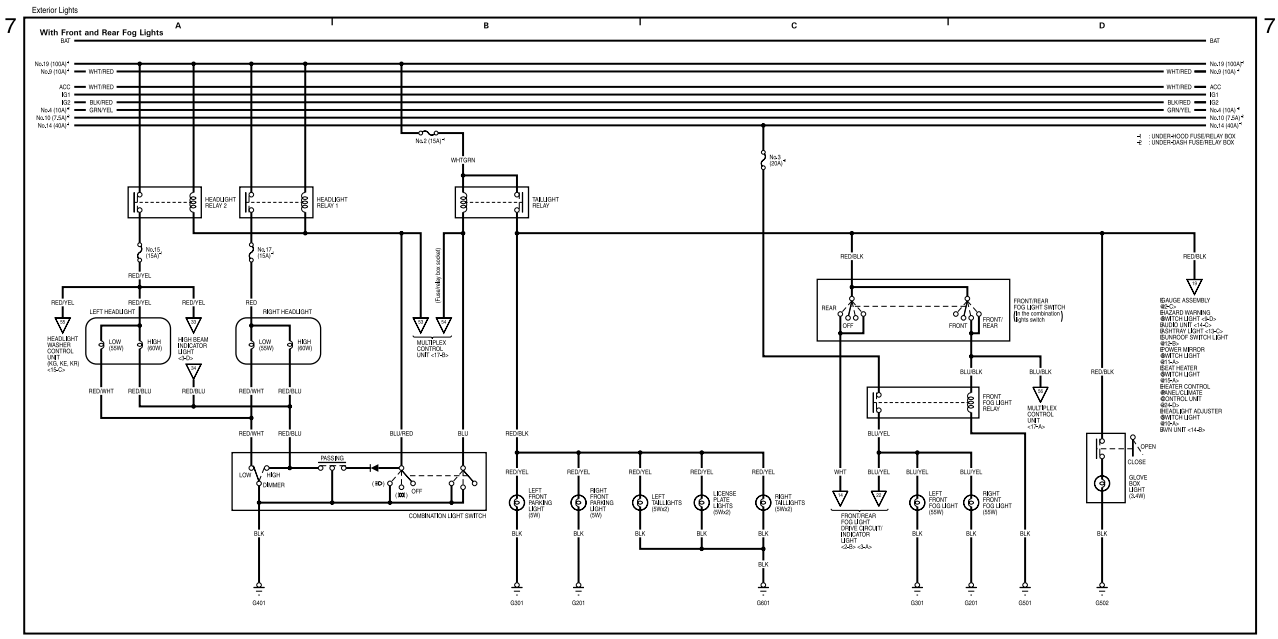

Exterior Lights (With Front and Rear Fog Lights) (cont'd)

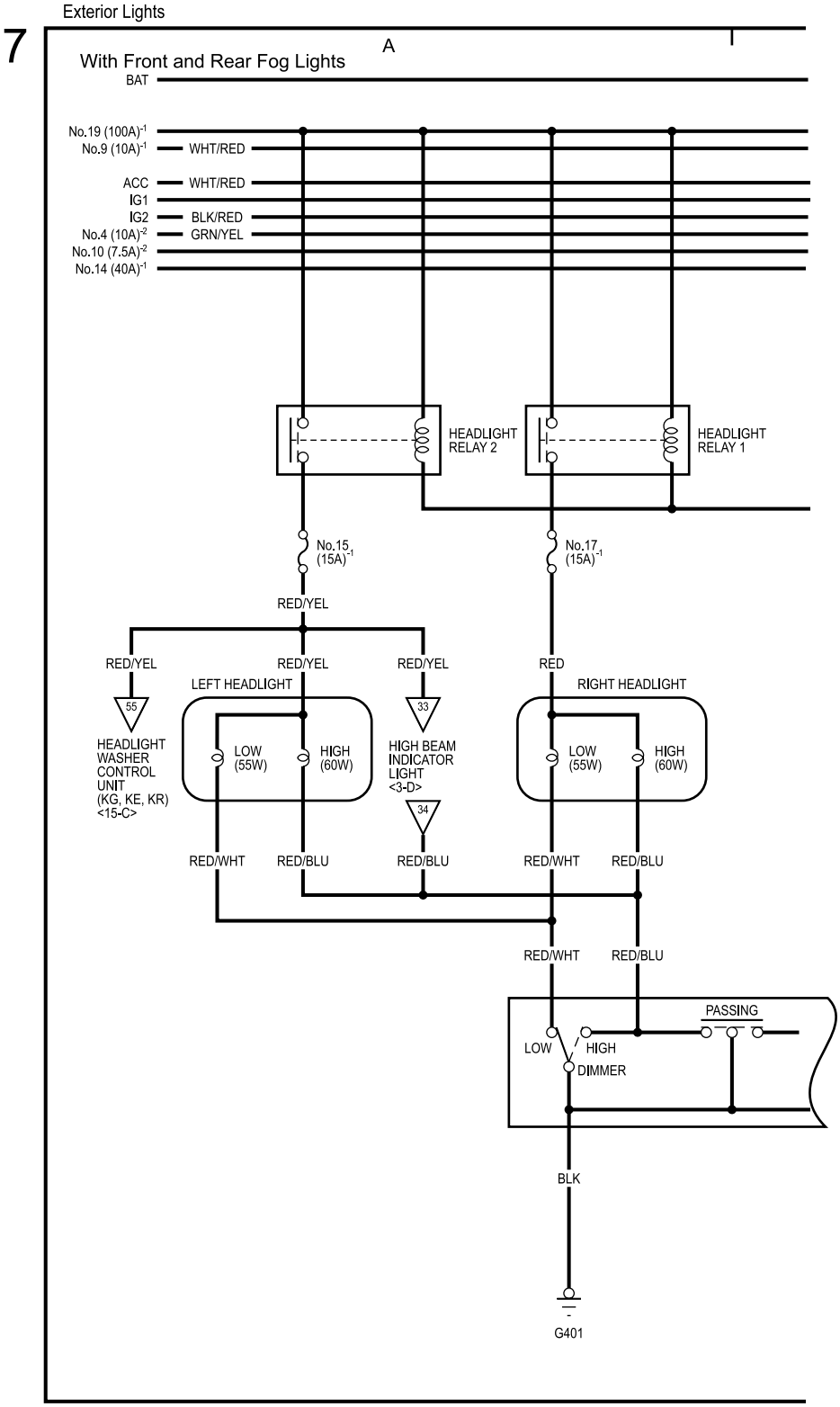

Exterior Lights (With Front and Rear Fog Lights) (cont'd)

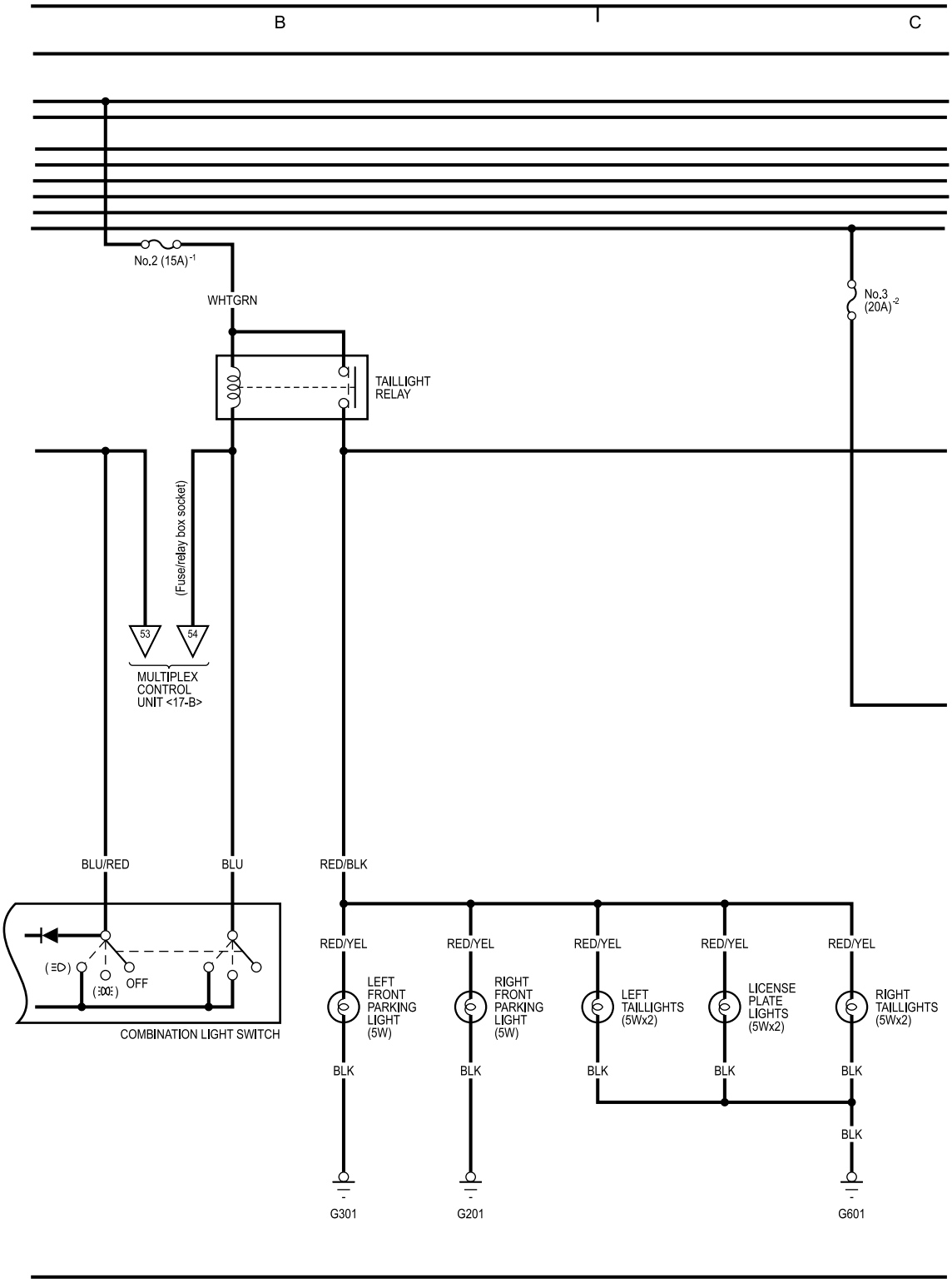

Exterior Lights (With Front and Rear Fog Lights) (cont'd)

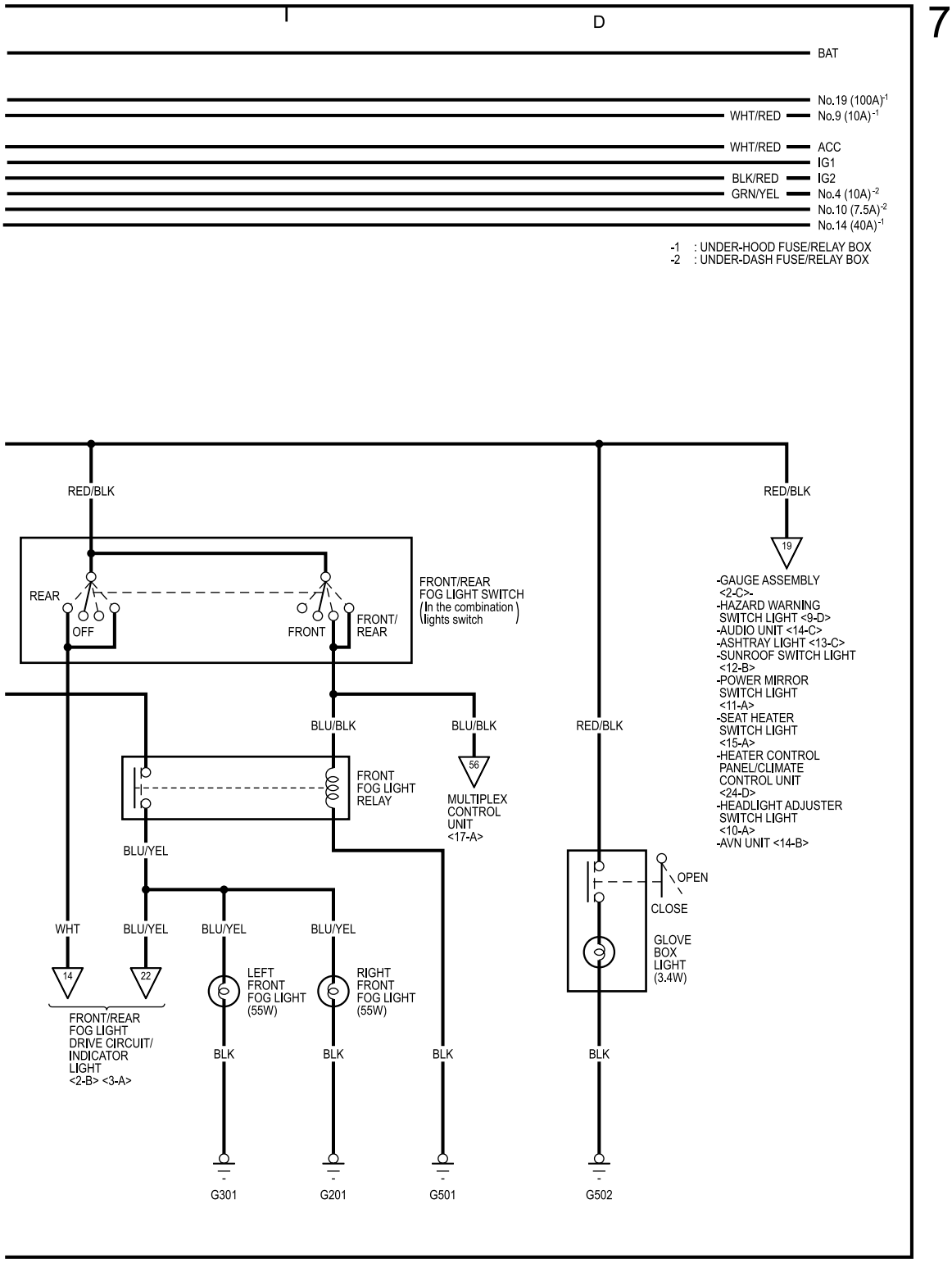

Exterior Lights (With Daytime Running Lights and Rear Fog Light)

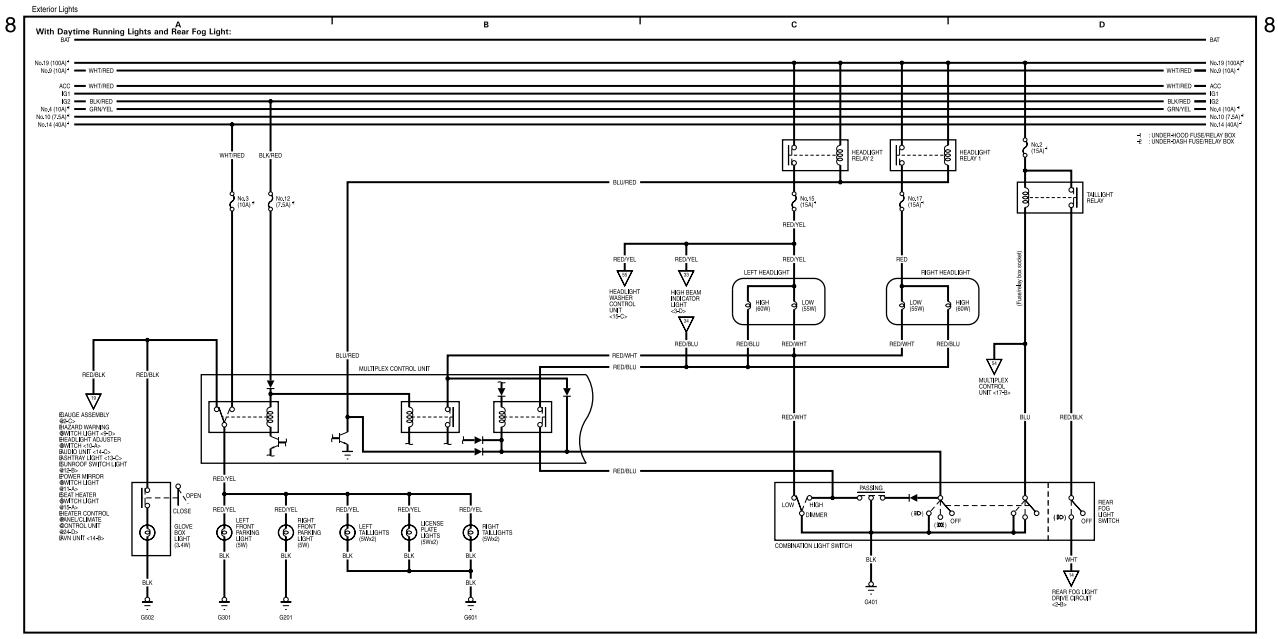

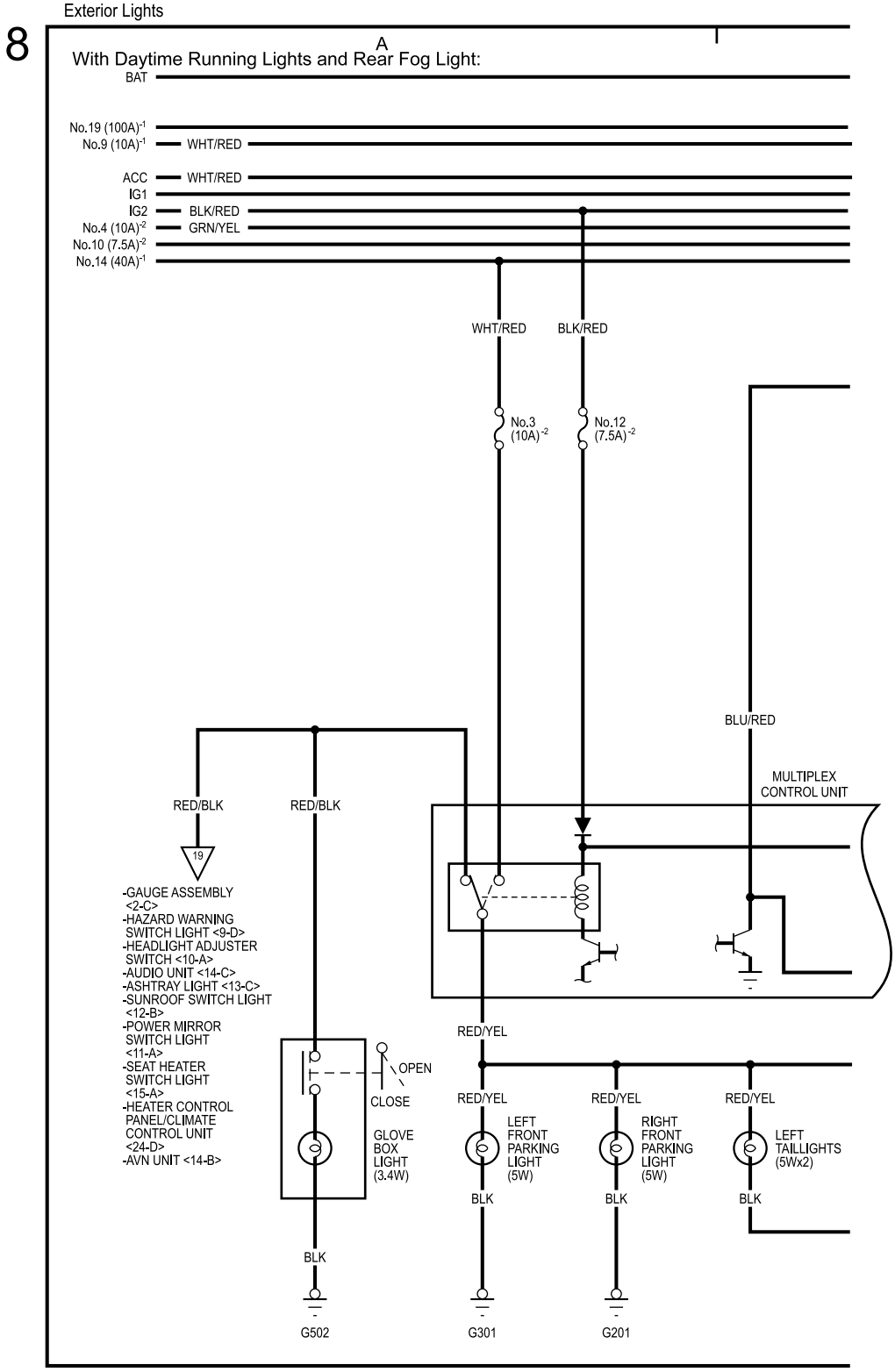
Exterior Lights
8
A
With Daytime Running Lights and Rear Fog Light:
BAT
No.19 (100A)-1
No.9 (10A)-1
WHT/RED
ACC
WHT/RED
IG1
IG2
BLK/RED
No.4 (10A)-2
GRN/YEL
No.10 (7.5A)-2
No.14 (40A)-1
WHT/RED
BLK/RED
No.3 (10A)-2
No.12 (7.5A)-2
BLU/RED
MULTIPLEX CONTROL UNIT
RED/BLK
RED/BLK
19
-GAUGE ASSEMBLY <2-C>
-HAZARD WARNING SWITCH LIGHT <9-D>
-HEADLIGHT ADJUSTER SWITCH <10-A>
-AUDIO UNIT <14-C>
-ASHTRAY LIGHT <13-C>
-SUNROOF SWITCH LIGHT <12-B>
-POWER MIRROR SWITCH LIGHT <11-A>
-SEAT HEATER SWITCH LIGHT <15-A>
-HEATER CONTROL PANEL/CLIMATE CONTROL UNIT <24-D>
-AVN UNIT <14-B>
RED/YEL
OPEN
CLOSE
GLOVE BOX LIGHT (3.4W)
RED/YEL
RED/YEL
RED/YEL
LEFT FRONT PARKING LIGHT (5W)
RIGHT FRONT PARKING LIGHT (5W)
LEFT TAILLIGHTS (5Wx2)
BLK
BLK
BLK
BLK
G502
G301
G201

Exterior Lights (With Daytime Running Lights and Rear Fog Light) (cont'd)

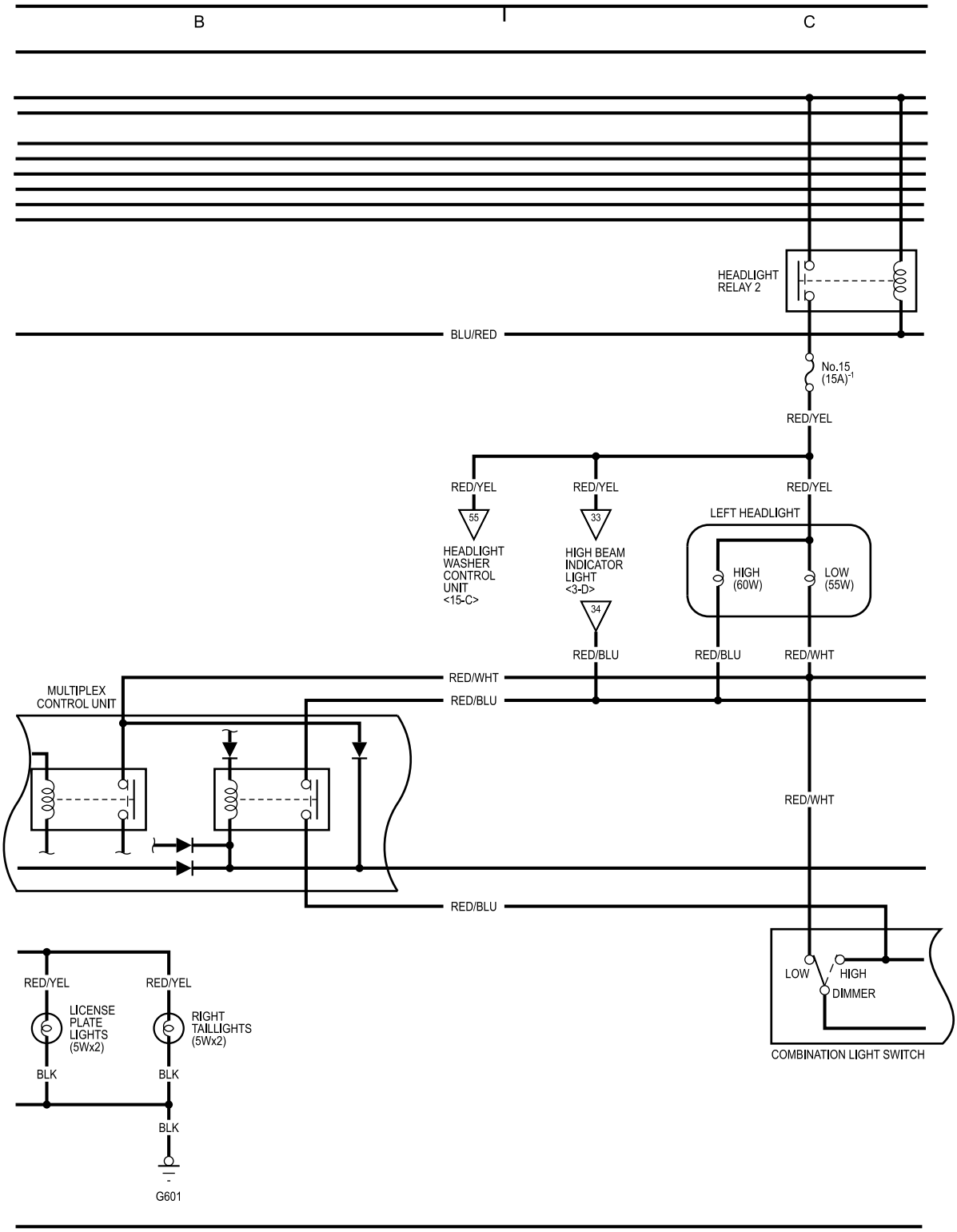

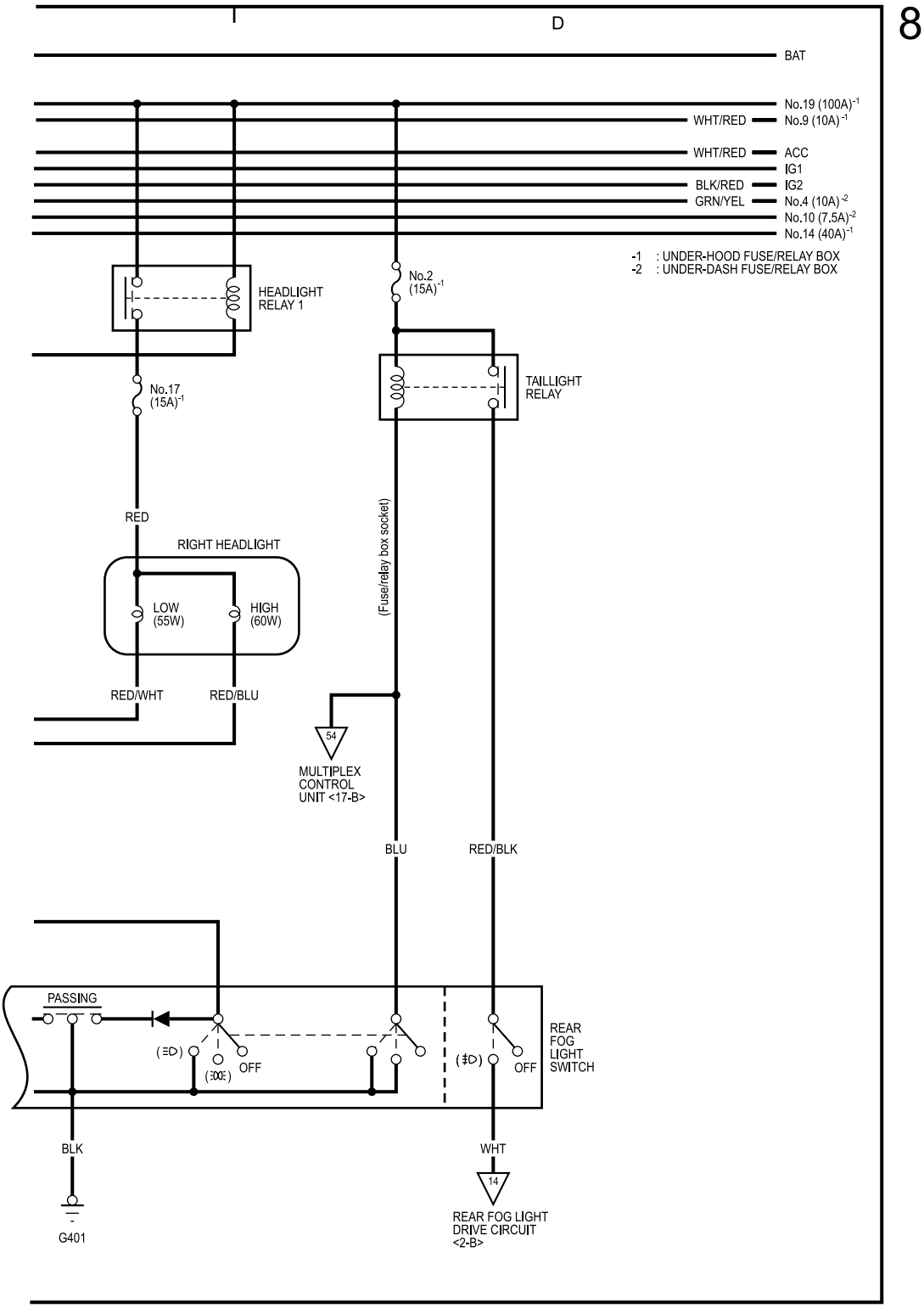
8
I
D
BAT
No.19 (100A)-1
WHT/RED
No.9 (10A)-1
WHT/RED
ACC
IG1
BLK/RED
IG2
GRN/YEL
No.4 (10A)-2
No.10 (7.5A)-2
No.14 (40A)-1
-1 : UNDER-HOOD FUSE/RELAY BOX
-2 : UNDER-DASH FUSE/RELAY BOX
HEADLIGHT RELAY 1
No.2 (15A)-1
TAILLIGHT RELAY
No.17 (15A)-1
RED
RIGHT HEADLIGHT
LOW (55W)
HIGH (60W)
RED/WHT
RED/BLU
(Fuse/relay box socket)
54
MULTIPLEX CONTROL UNIT <17-B>
BLU
RED/BLK
PASSING
OFF
OFF
REAR FOG LIGHT SWITCH
BLK
G401
WHT
14
REAR FOG LIGHT DRIVE CIRCUIT <2-B>

Exterior Lights (Back-up Lights, Brake Lights, Turn Signal/Hazard Flasher)

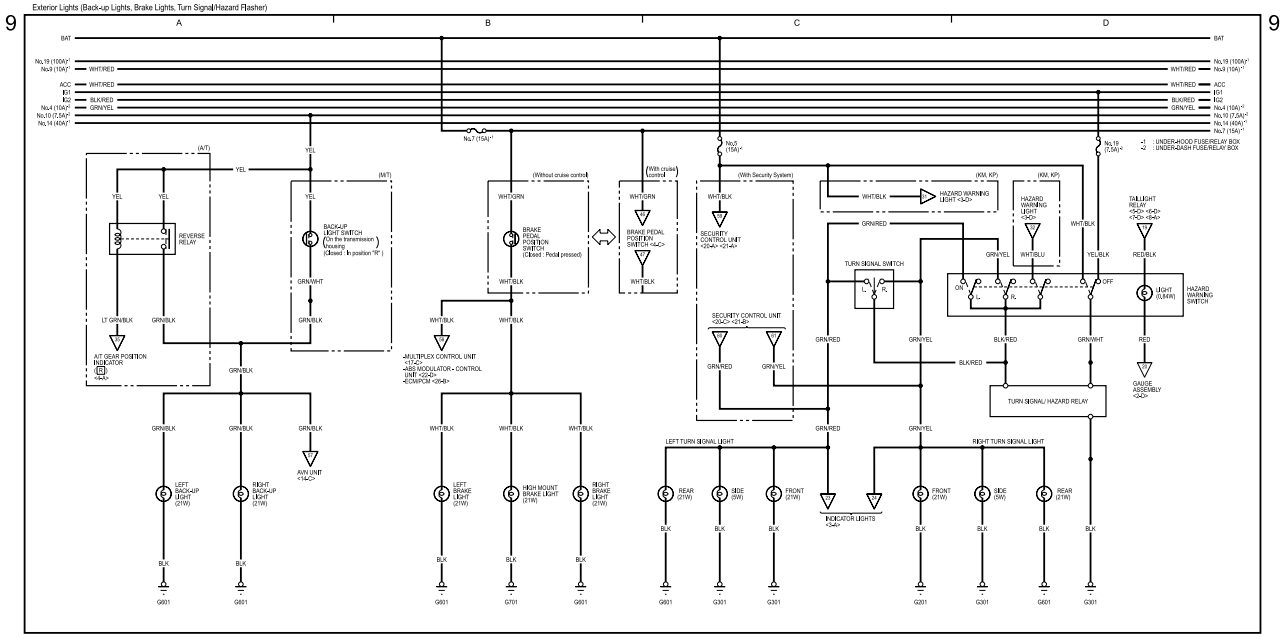

Exterior Lights (Back-up Lights, Brake Lights, Turn Signal/Hazard Flasher) (cont'd)

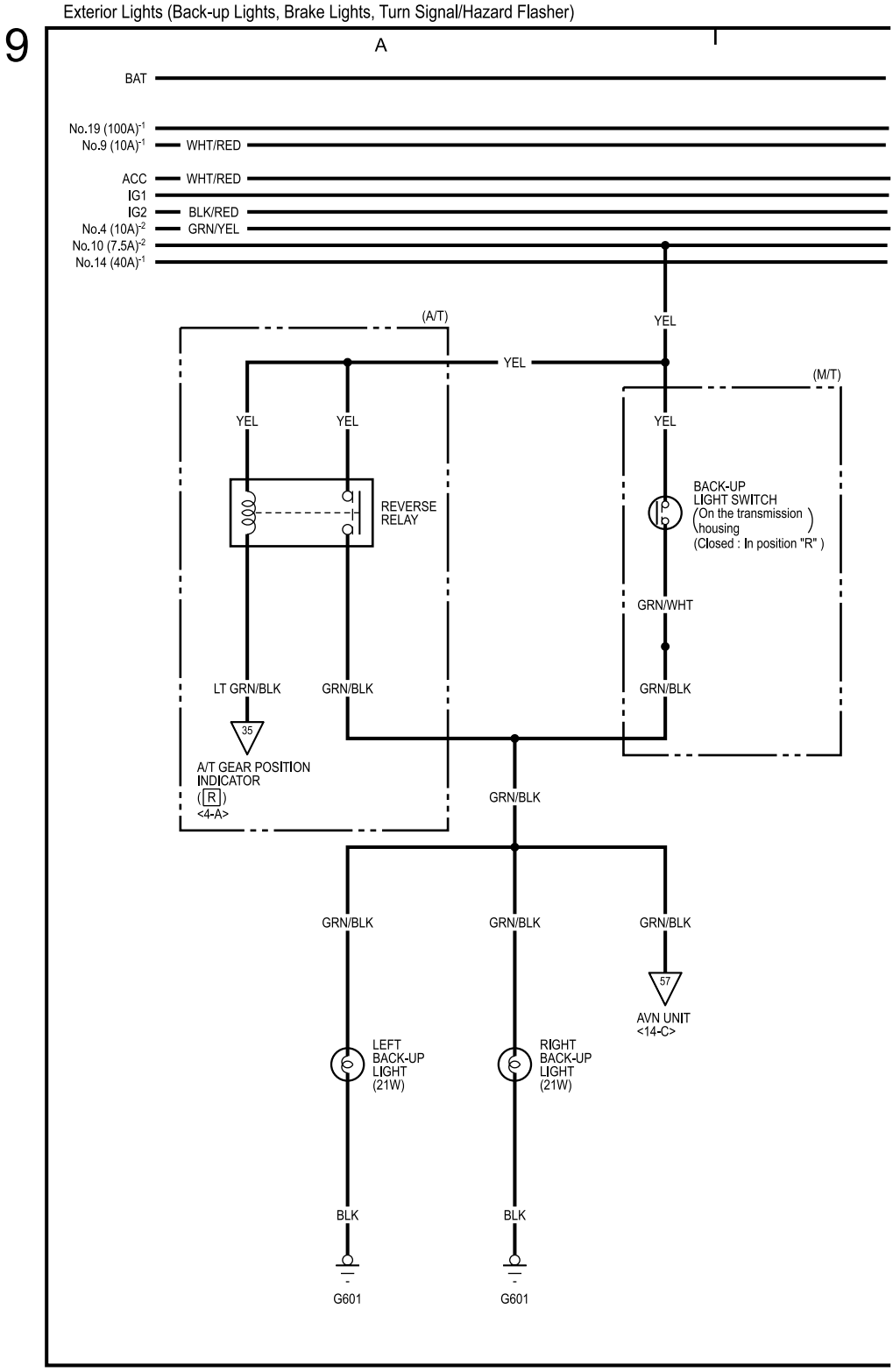

Exterior Lights (Back-up Lights, Brake Lights, Turn Signal/Hazard Flasher) (cont'd)

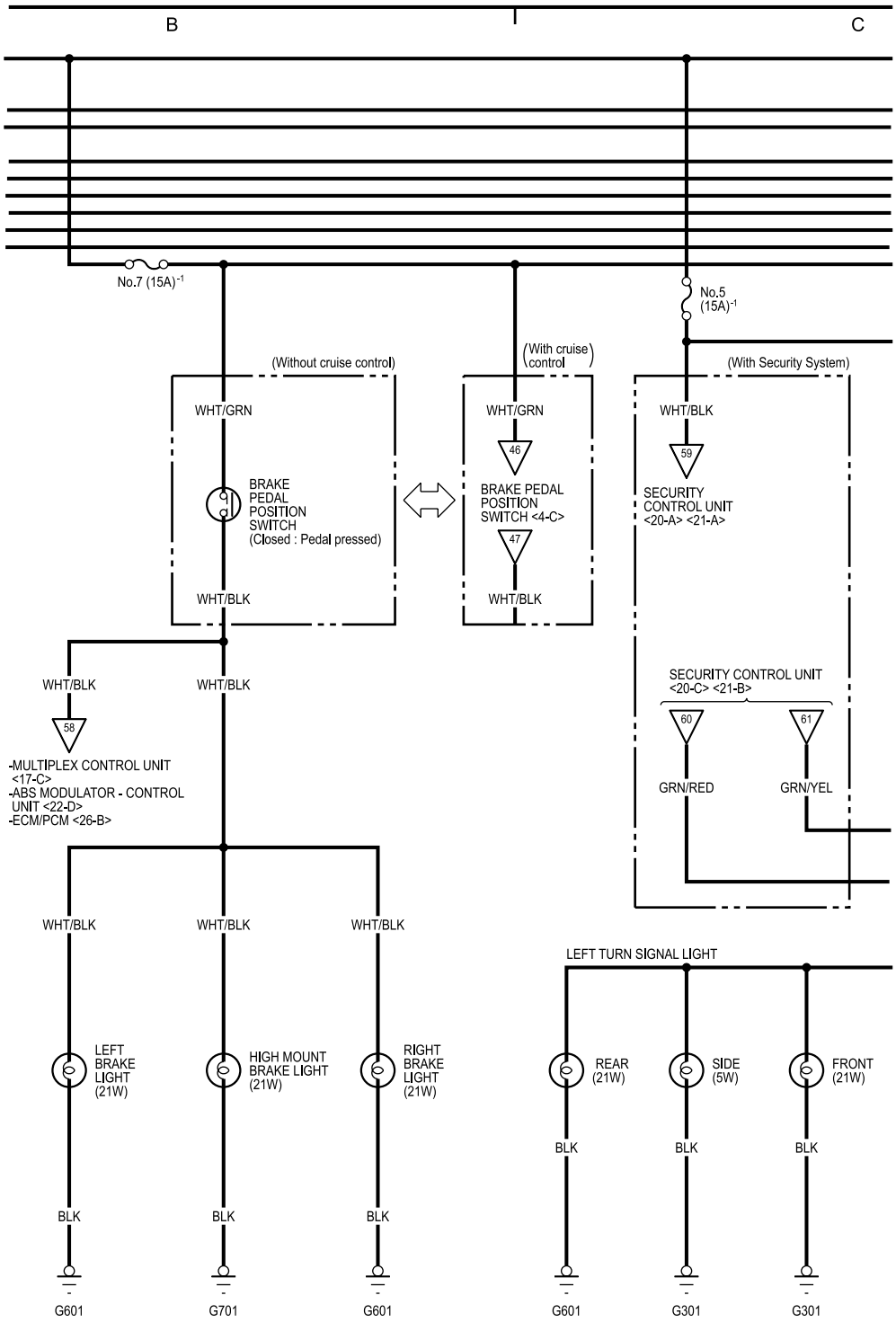

Exterior Lights (Back-up Lights, Brake Lights, Turn Signal/Hazard Flasher) (cont'd)

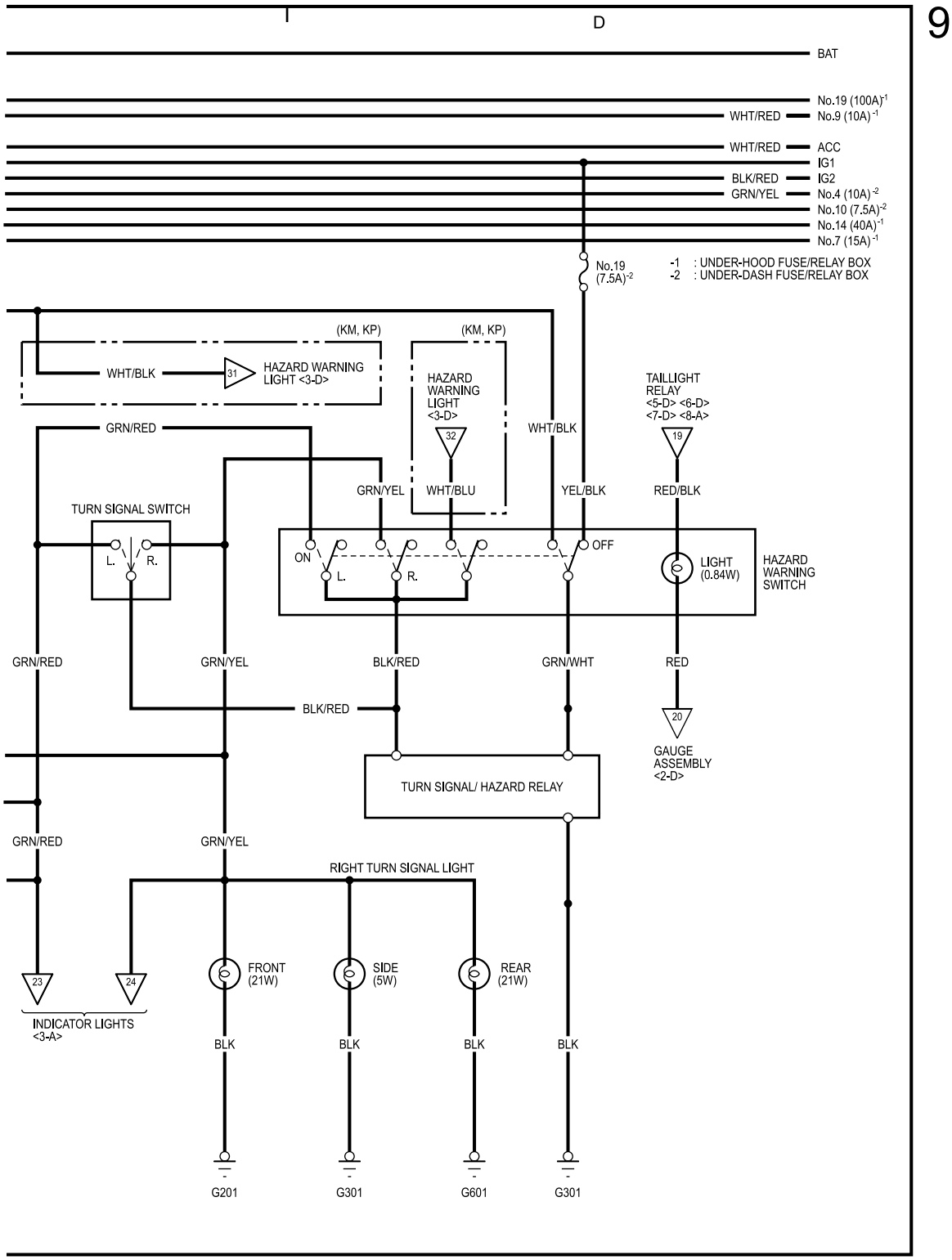

Exterior Lights (Headlight Adjuster System), Interior Lights, Horns

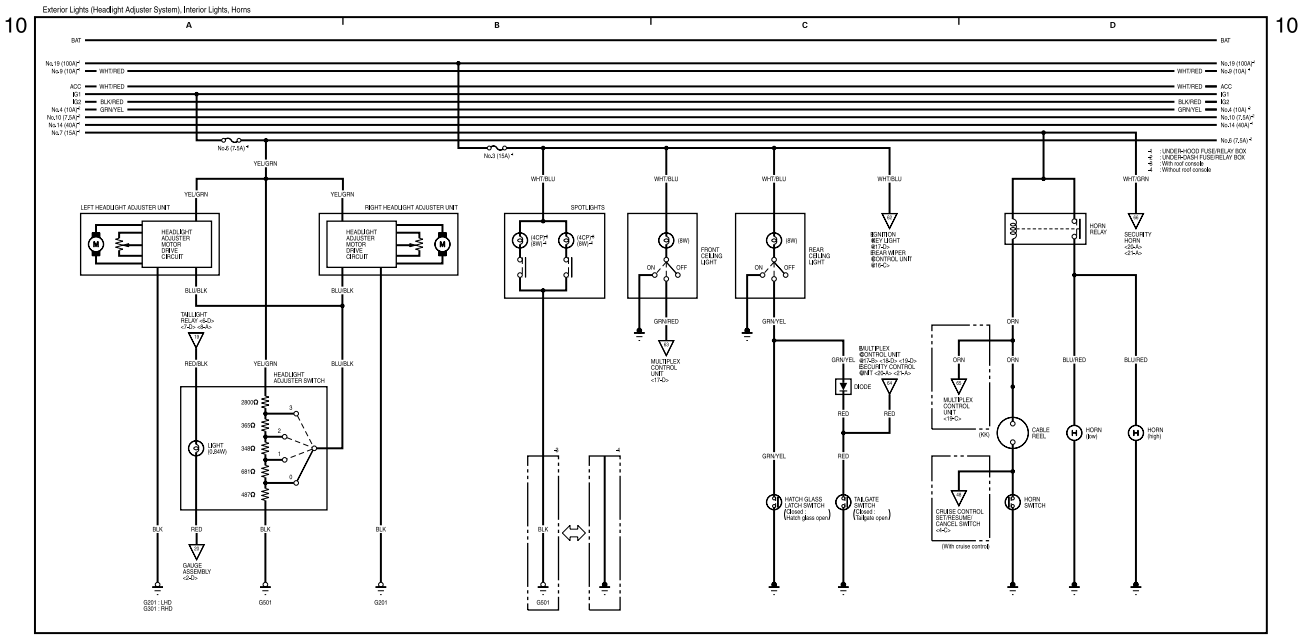

10

Exterior Lights (Headlight Adjuster System), Interior Lights, Horns

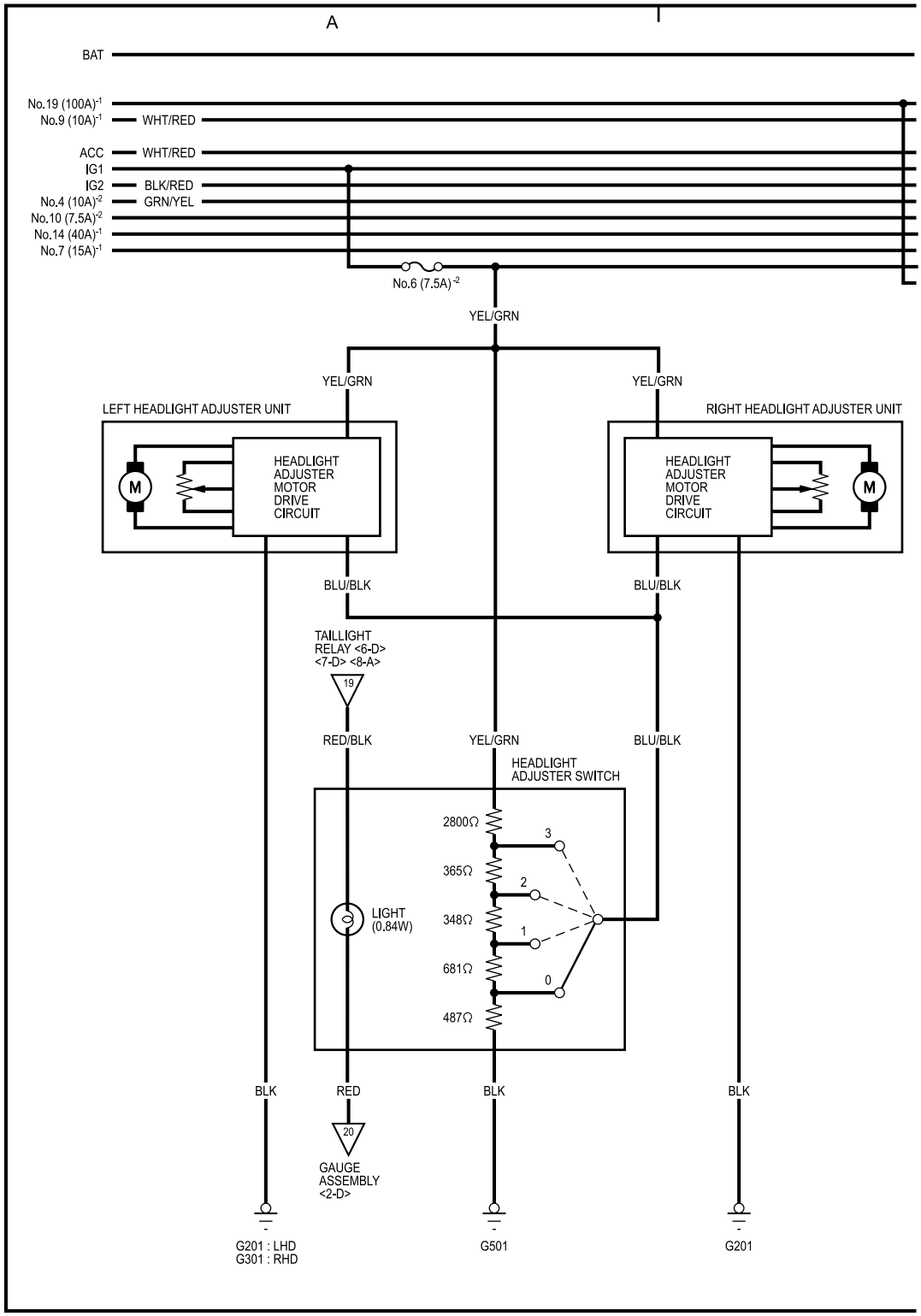

Exterior Lights (Headlight Adjuster System), Interior Lights, Horns (cont'd)

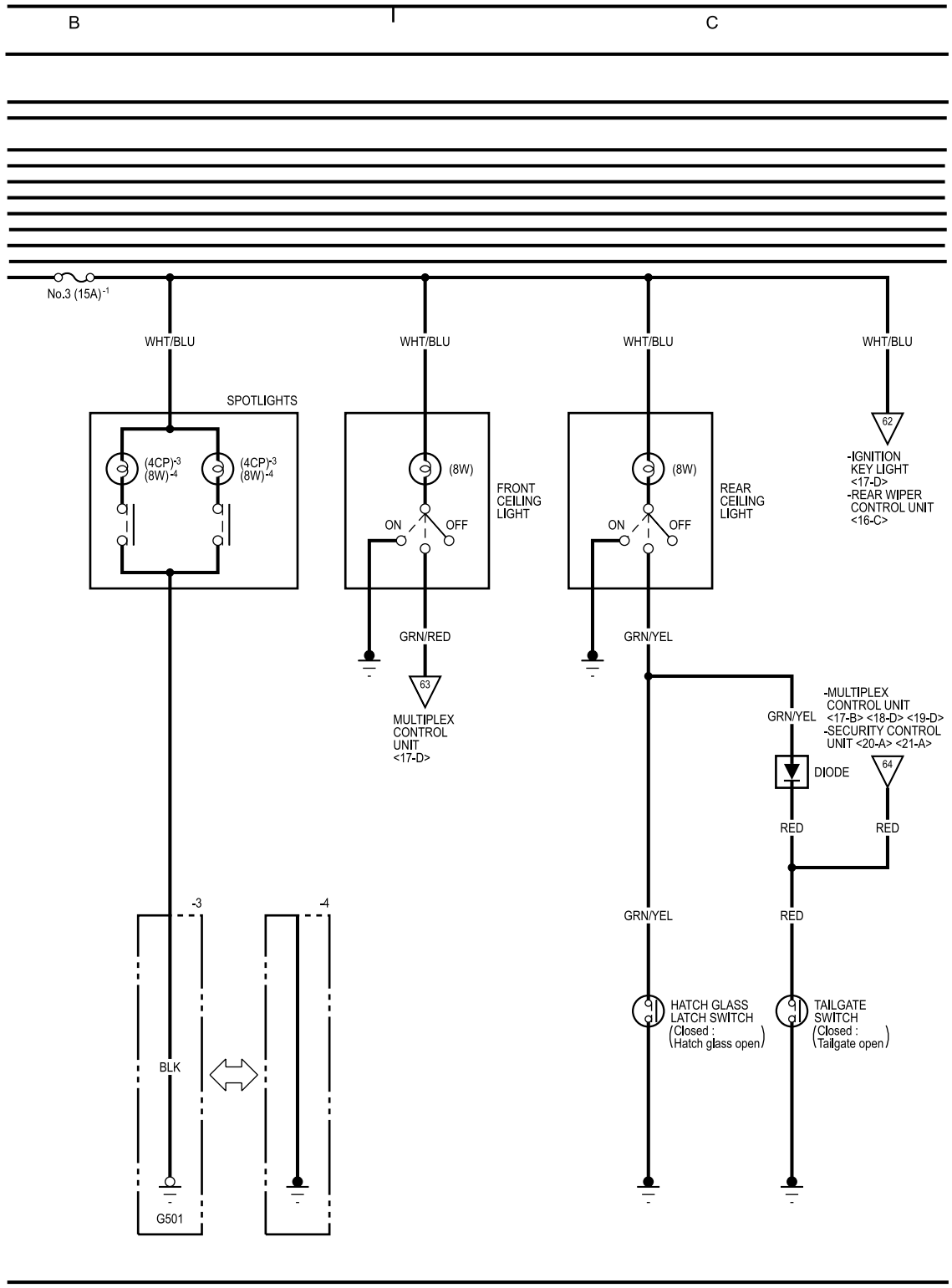

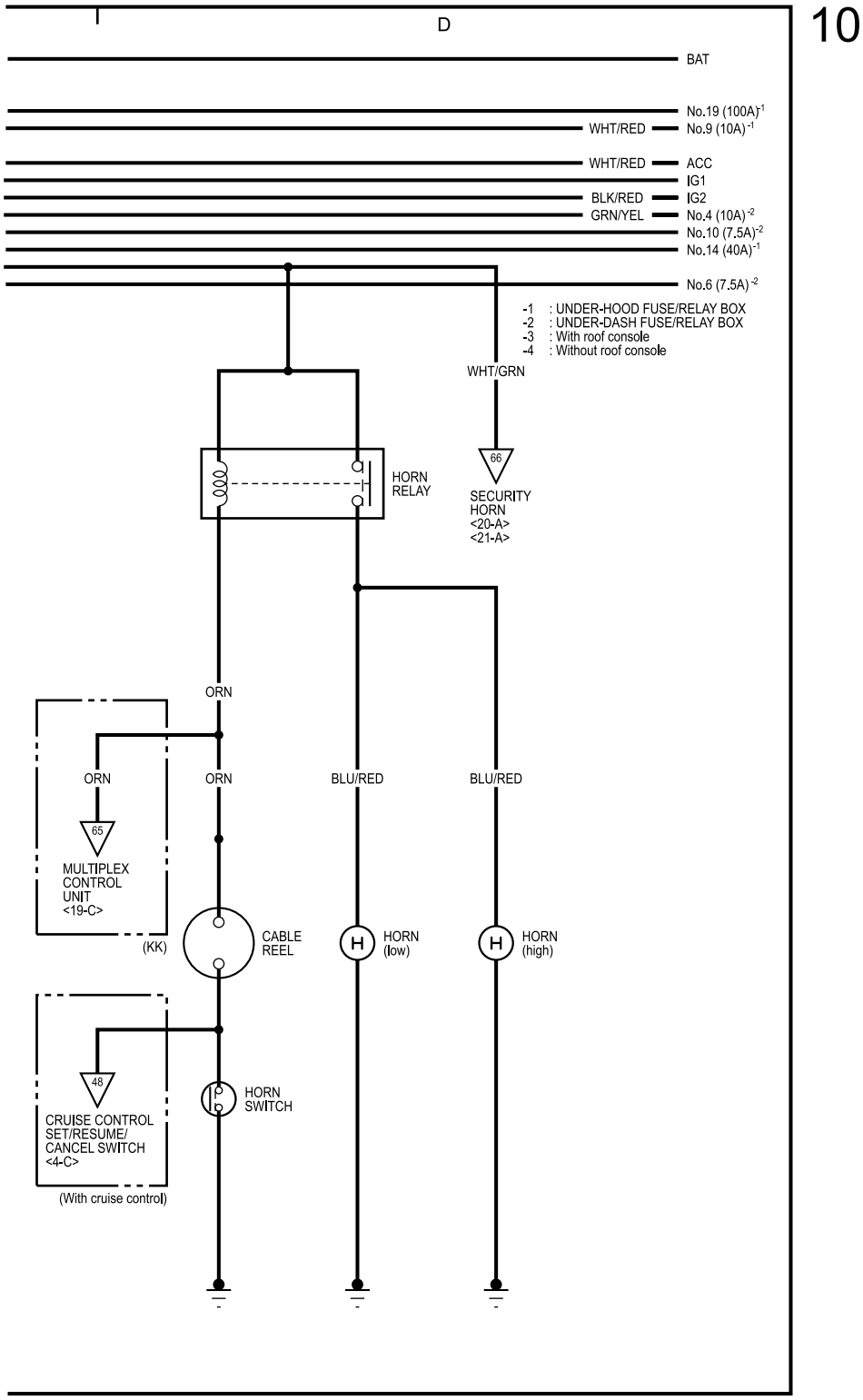
10
D
BAT
No.19 (100A) -1
WHT/RED
No.9 (10A) -1
WHT/RED
ACC
IG1
BLK/RED
IG2
GRN/YEL
No.4 (10A) -2
No.10 (7.5A) -2
No.14 (40A) -1
No.6 (7.5A) -2
-1 : UNDER-HOOD FUSE/RELAY BOX
-2 : UNDER-DASH FUSE/RELAY BOX
-3 : With roof console
-4 : Without roof console
WHT/GRN
HORN RELAY
66
SECURITY HORN
<20-A>
<21-A>
ORN
ORN
ORN
BLU/RED
BLU/RED
65
MULTIPLEX CONTROL UNIT
<19-C>
(KK)
CABLE REEL
H
HORN (low)
H
HORN (high)
48
CRUISE CONTROL SET/RESUME/ CANCEL SWITCH
<4-C>
(With cruise control)
HORN SWITCH

Power Mirror

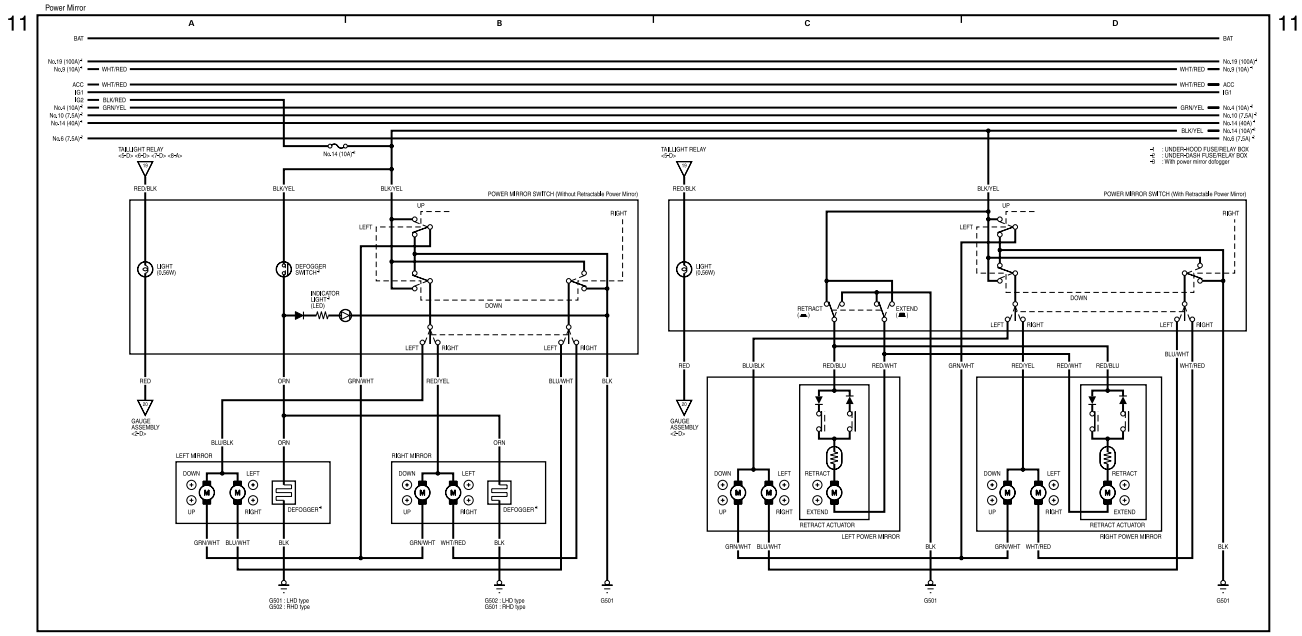

Power Mirror (cont'd)

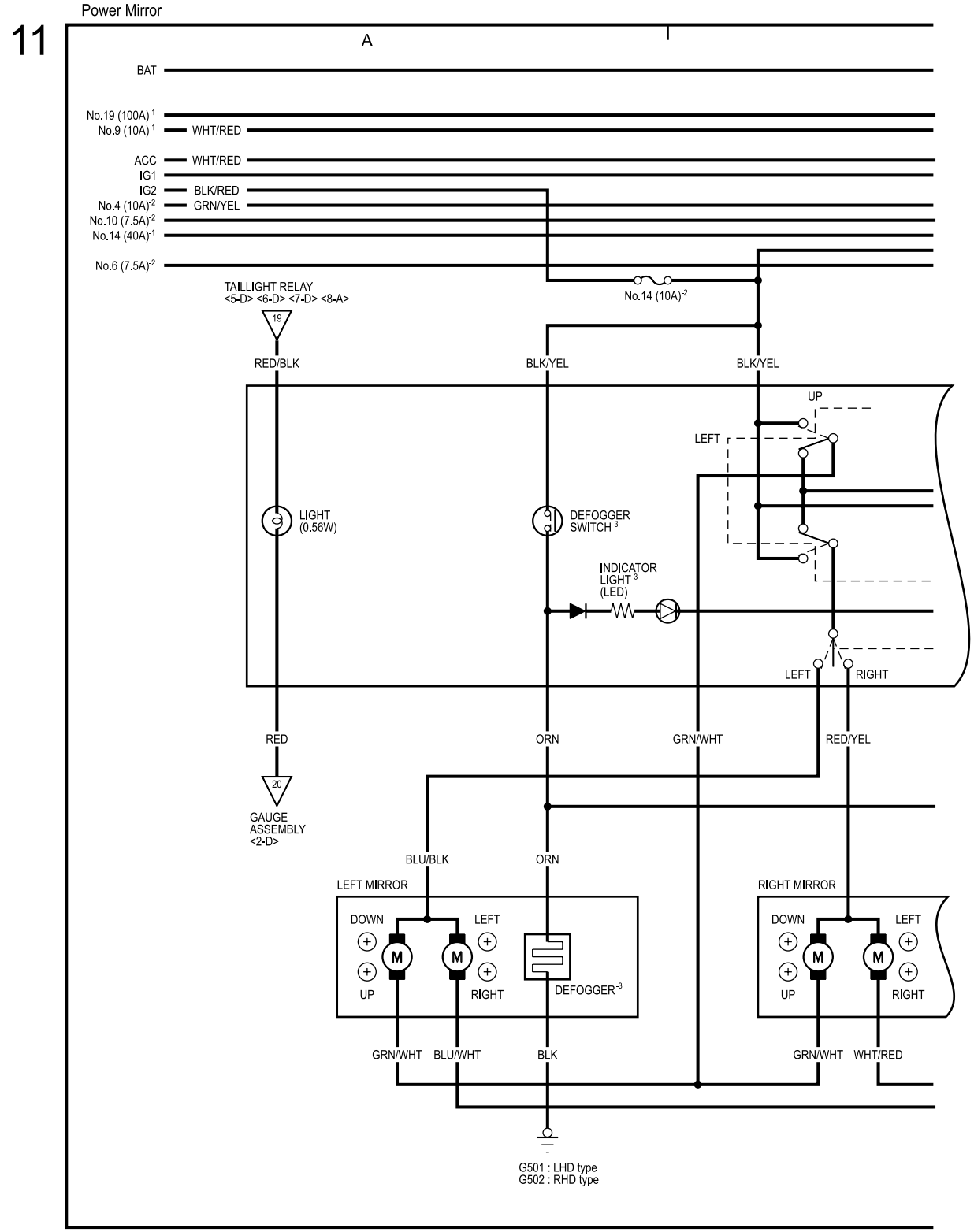

Power Mirror (cont'd)

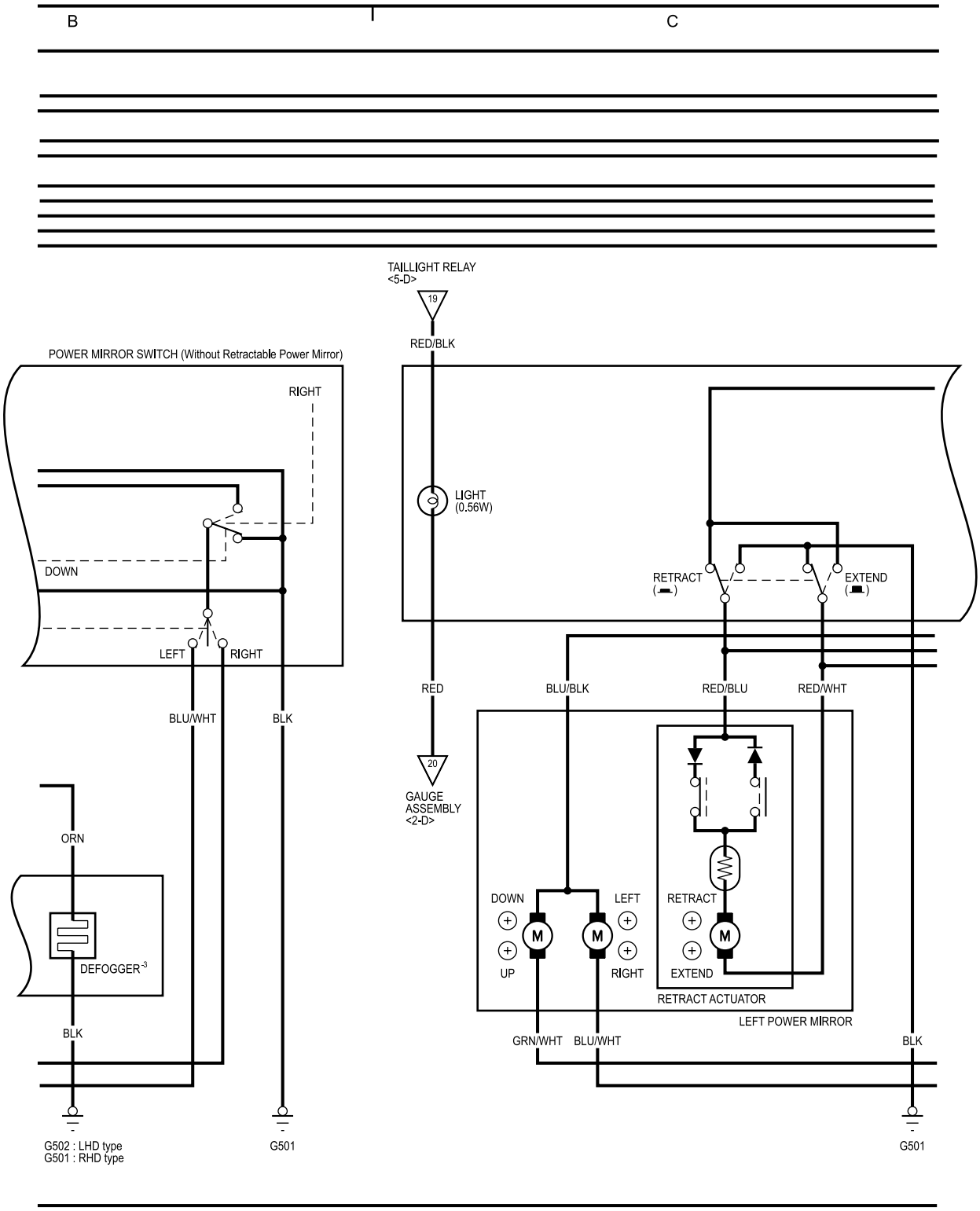

Power Mirror (cont'd)

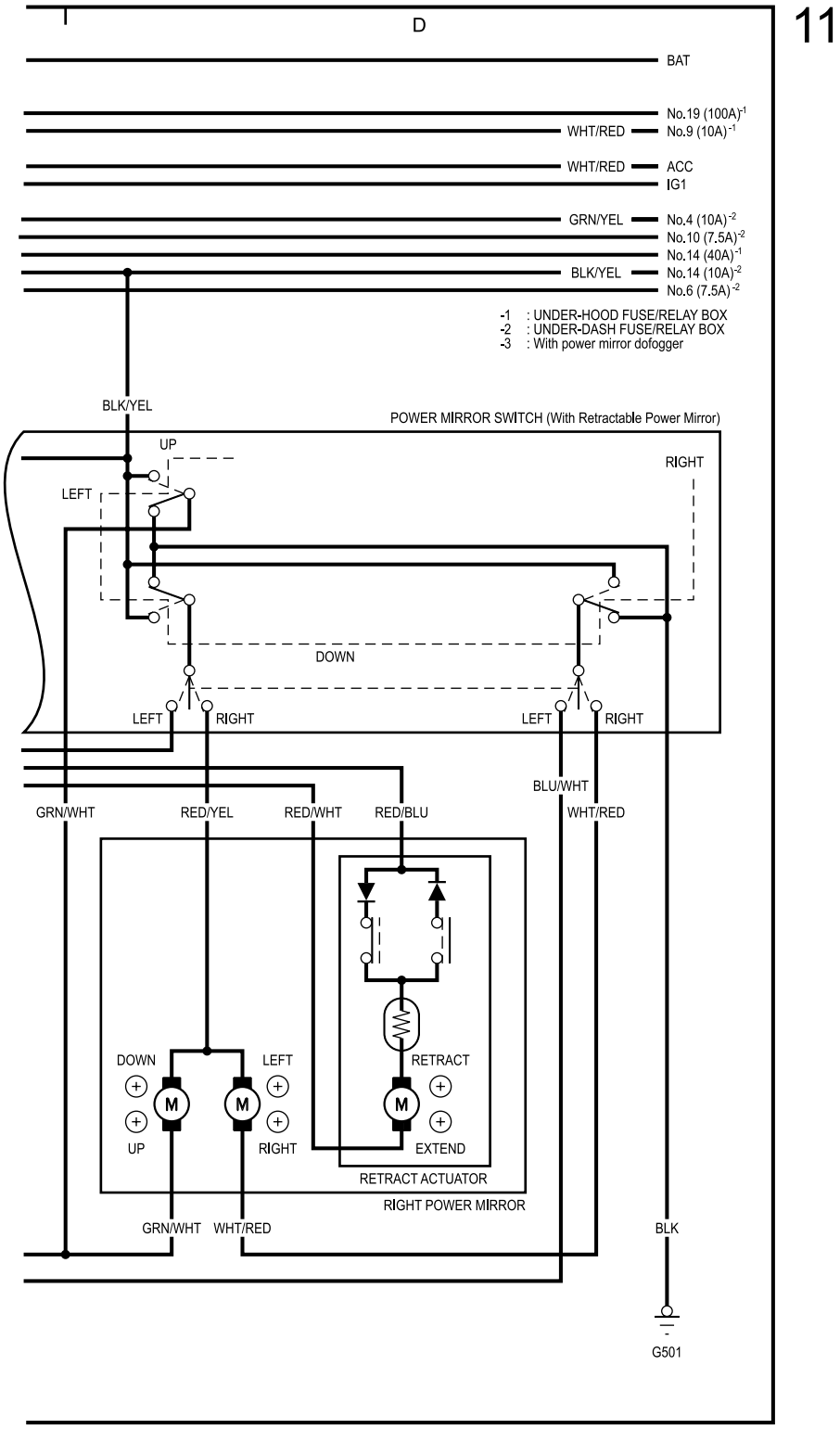

Sunroof, Power Windows

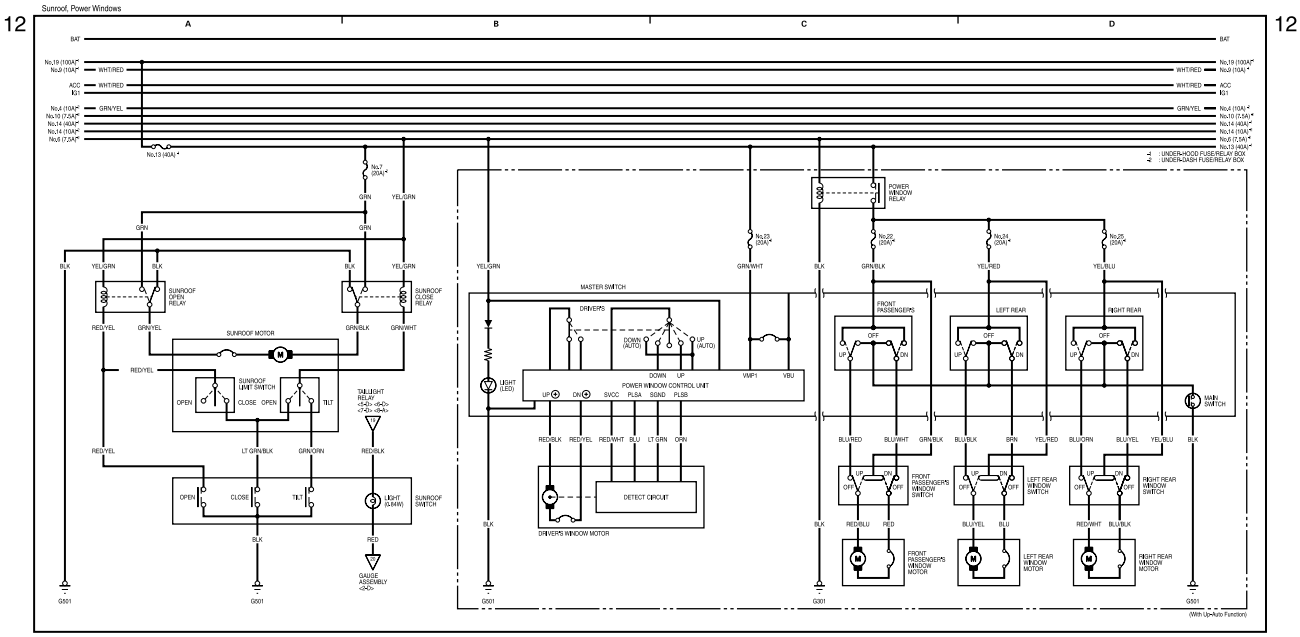

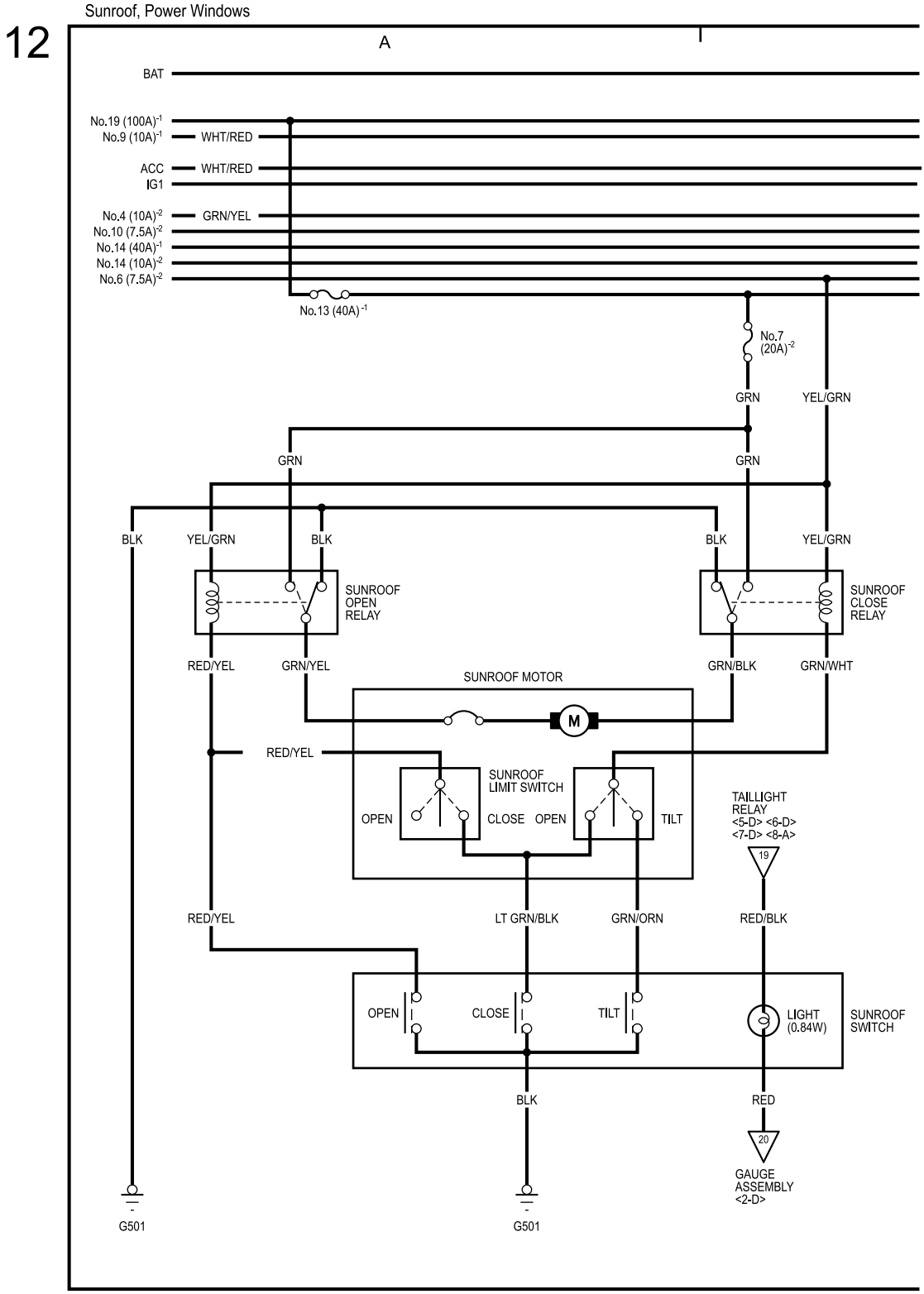
Sunroof, Power Windows
12
A
BAT
No.19 (100A)-1
No.9 (10A)-1
WHT/RED
ACC
IG1
WHT/RED
No.4 (10A)-2
GRN/YEL
No.10 (7.5A)-2
No.14 (40A)-1
No.14 (10A)-2
No.6 (7.5A)-2
No.13 (40A)-1
No.7 (20A)-2
GRN
YEL/GRN
GRN
GRN
BLK
YEL/GRN
BLK
BLK
YEL/GRN
SUNROOF OPEN RELAY
SUNROOF CLOSE RELAY
RED/YEL
GRN/YEL
GRN/BLK
GRN/WHT
SUNROOF MOTOR
M
RED/YEL
SUNROOF LIMIT SWITCH
OPEN
CLOSE
OPEN
TILT
TAILLIGHT RELAY <5-D> <6-D> <7-D> <8-A>
19
RED/YEL
LT GRN/BLK
GRN/ORN
RED/BLK
OPEN
CLOSE
TILT
LIGHT (0.84W)
SUNROOF SWITCH
BLK
RED
20
GAUGE ASSEMBLY <2-D>
G501
G501

Sunroof, Power Windows (cont'd)

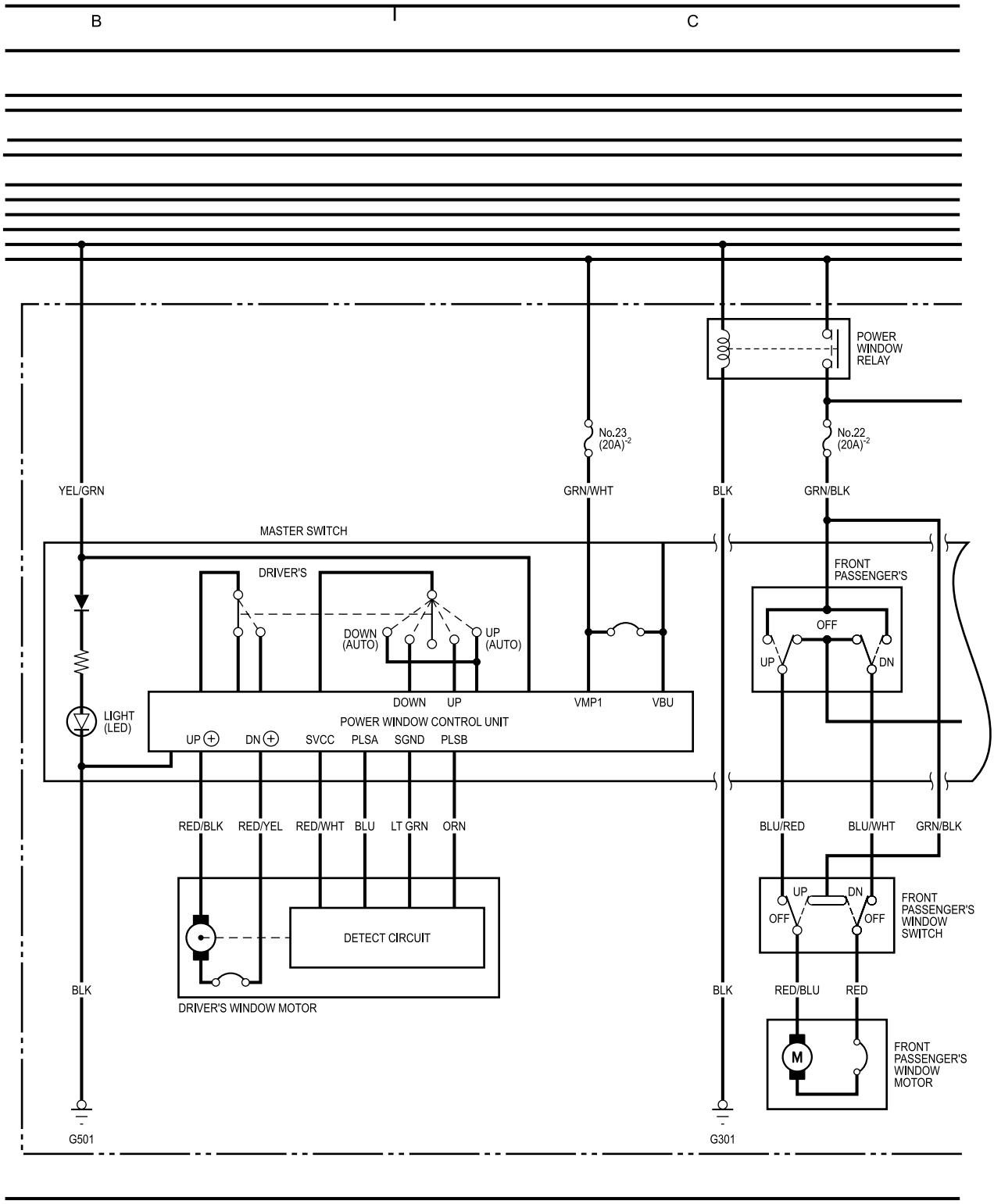

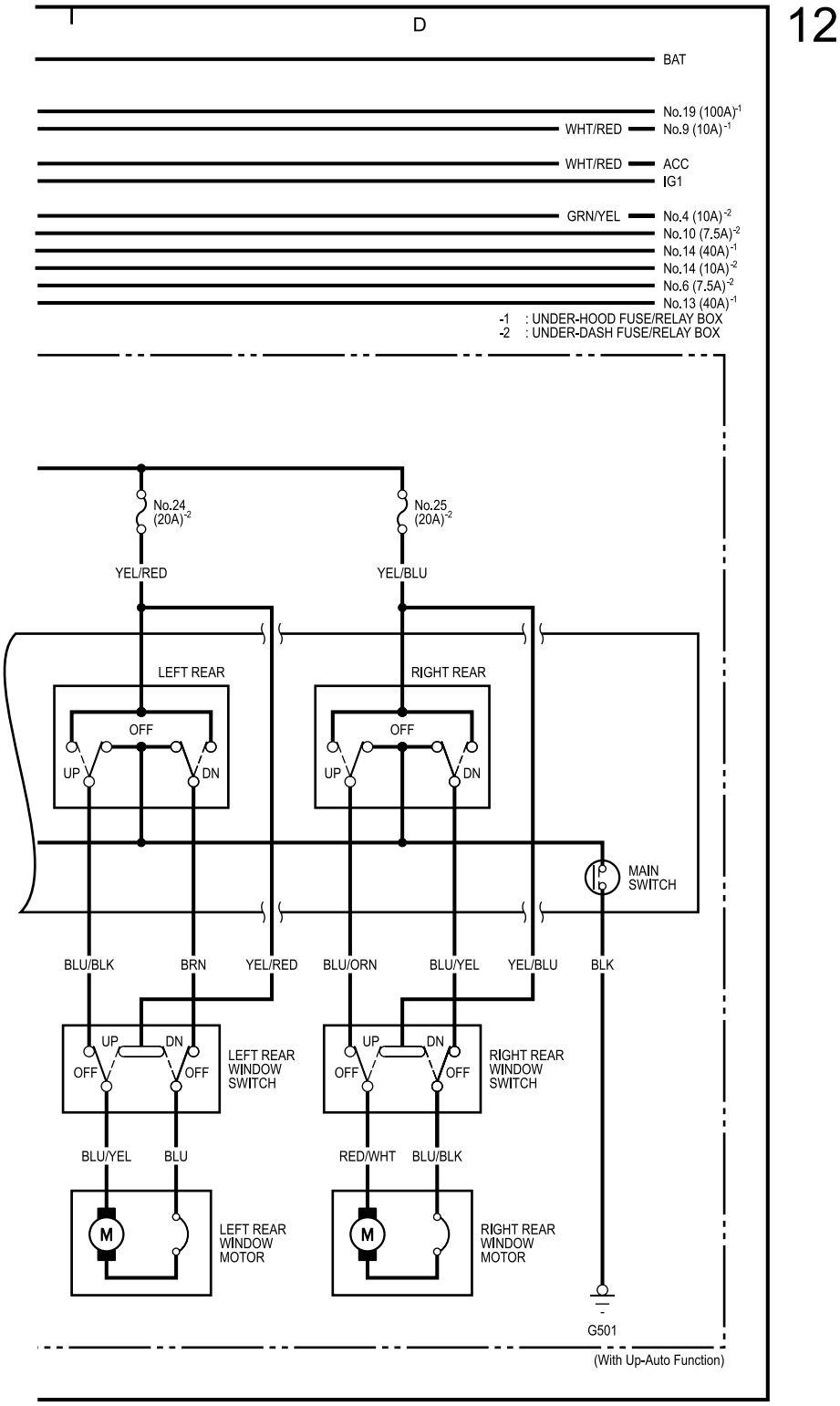
12
D
BAT
No.19 (100A)-1
WHT/RED
No.9 (10A)-1
WHT/RED
ACC
IG1
GRN/YEL
No.4 (10A)-2
No.10 (7.5A)-2
No.14 (40A)-1
No.14 (10A)-2
No.6 (7.5A)-2
No.13 (40A)-1
-1 : UNDER-HOOD FUSE/RELAY BOX
-2 : UNDER-DASH FUSE/RELAY BOX
No.24 (20A)-2
No.25 (20A)-2
YEL/RED
YEL/BLU
LEFT REAR
RIGHT REAR
OFF
UP
DN
MAIN SWITCH
BLU/BLK
BRN
YEL/RED
BLU/ORN
BLU/YEL
YEL/BLU
BLK
LEFT REAR WINDOW SWITCH
RIGHT REAR WINDOW SWITCH
BLU/YEL
BLU
RED/WHT
BLU/BLK
M
LEFT REAR WINDOW MOTOR
RIGHT REAR WINDOW MOTOR
G501
(With Up-Auto Function)

Power Window, Cigarette Lighter, Accessory Power Socket

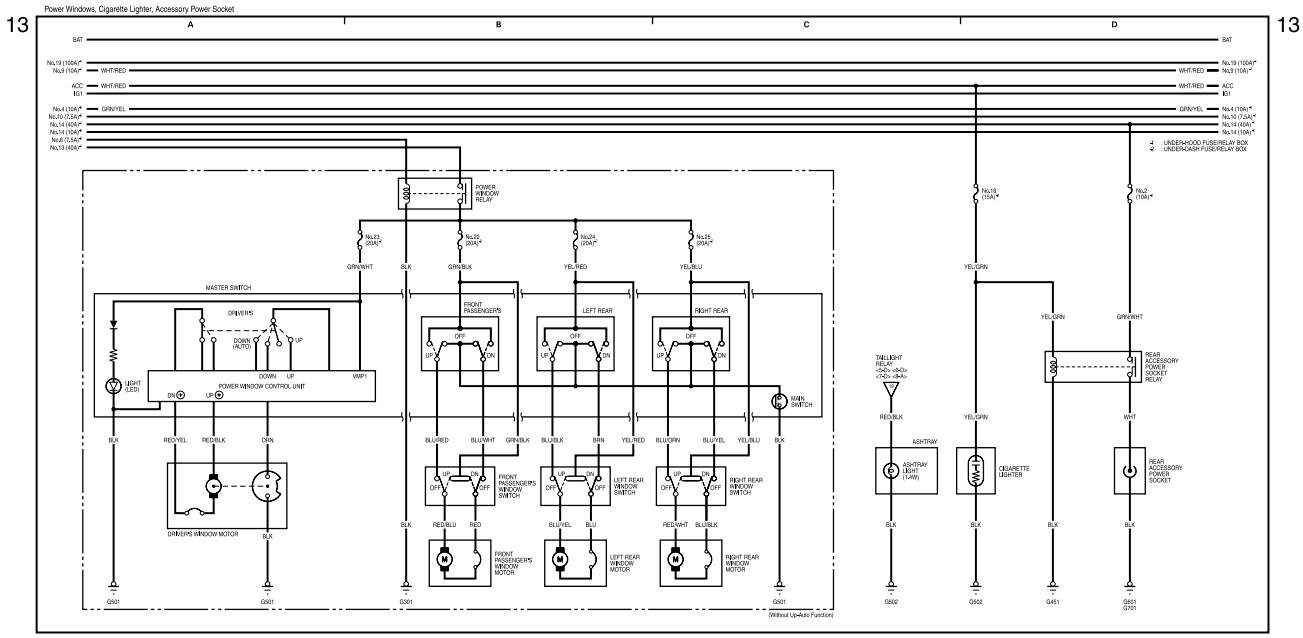

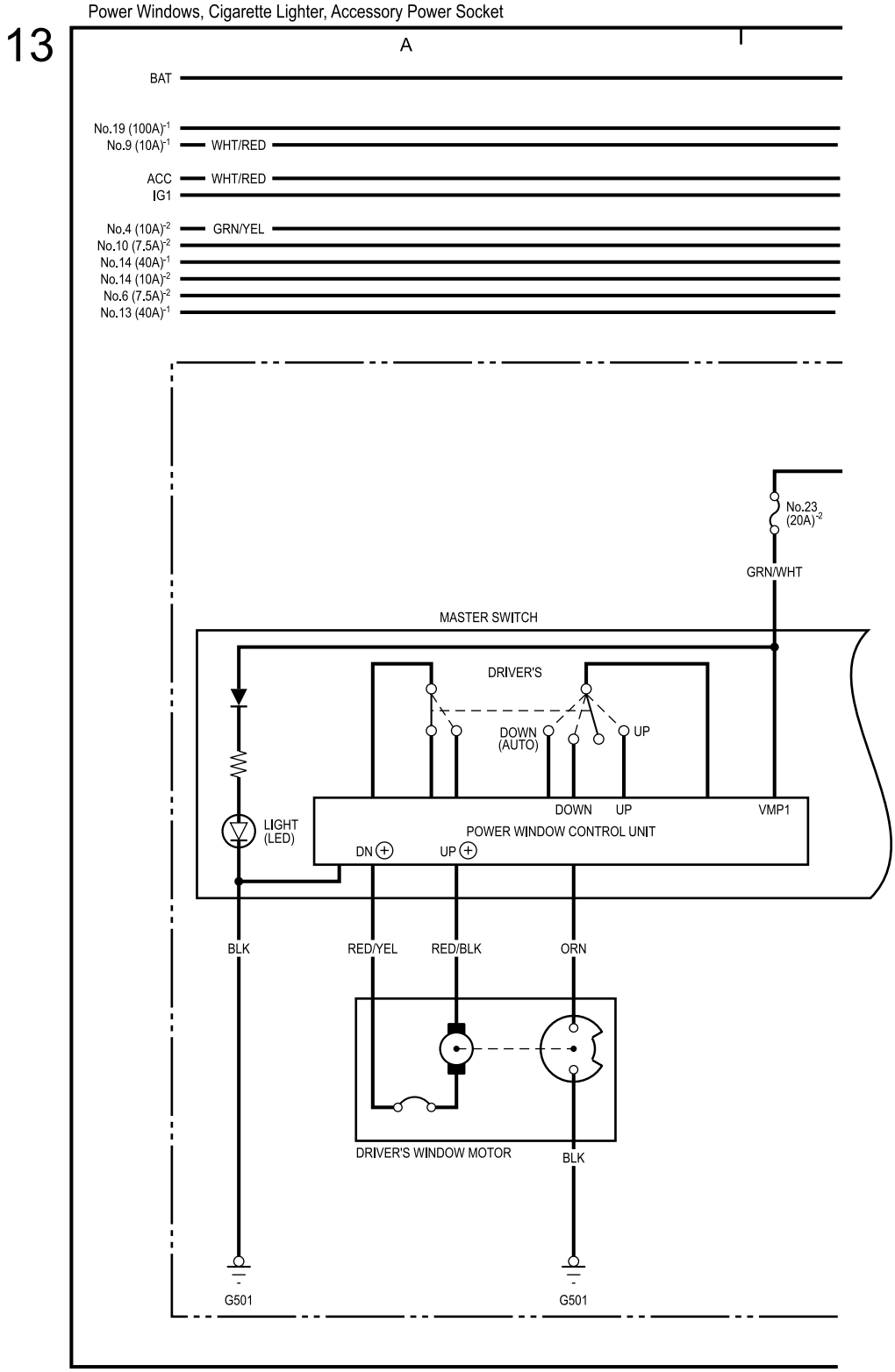
Power Windows, Cigarette Lighter, Accessory Power Socket
13
A
BAT
No.19 (100A)-1
No.9 (10A)-1
WHT/RED
ACC
WHT/RED
IG1
No.4 (10A)-2
GRN/YEL
No.10 (7.5A)-2
No.14 (40A)-1
No.14 (10A)-2
No.6 (7.5A)-2
No.13 (40A)-1
No.23 (20A)-2
GRN/WHT
MASTER SWITCH
DRIVER'S
DOWN (AUTO)
UP
LIGHT (LED)
DOWN
UP
VMP1
POWER WINDOW CONTROL UNIT
DN
UP
BLK
RED/YEL
RED/BLK
ORN
DRIVER'S WINDOW MOTOR
BLK
G501
G501

Power Window, Cigarette Lighter, Accessory Power Socket (cont'd)

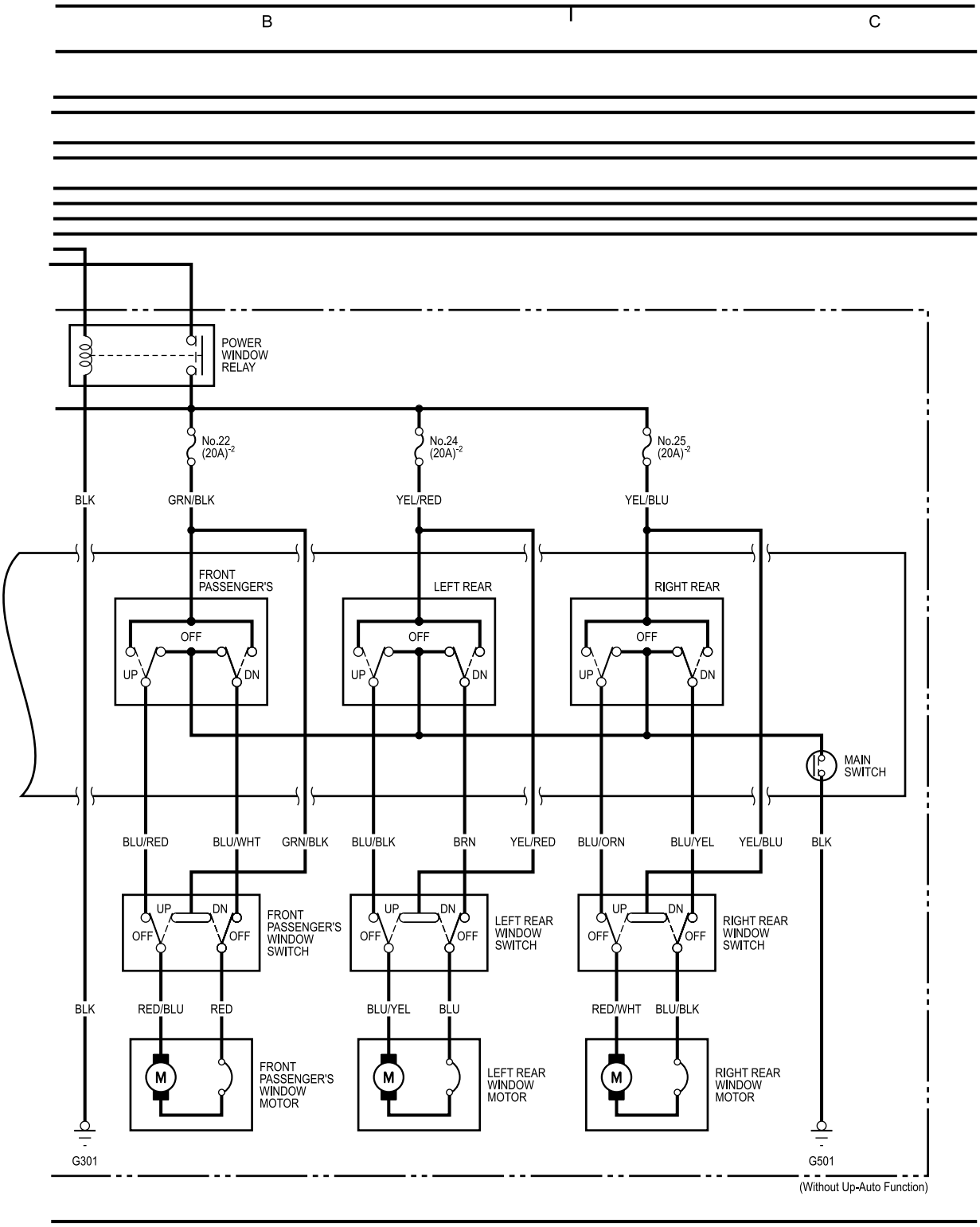

Power Window, Cigarette Lighter, Accessory Power Socket (cont'd)

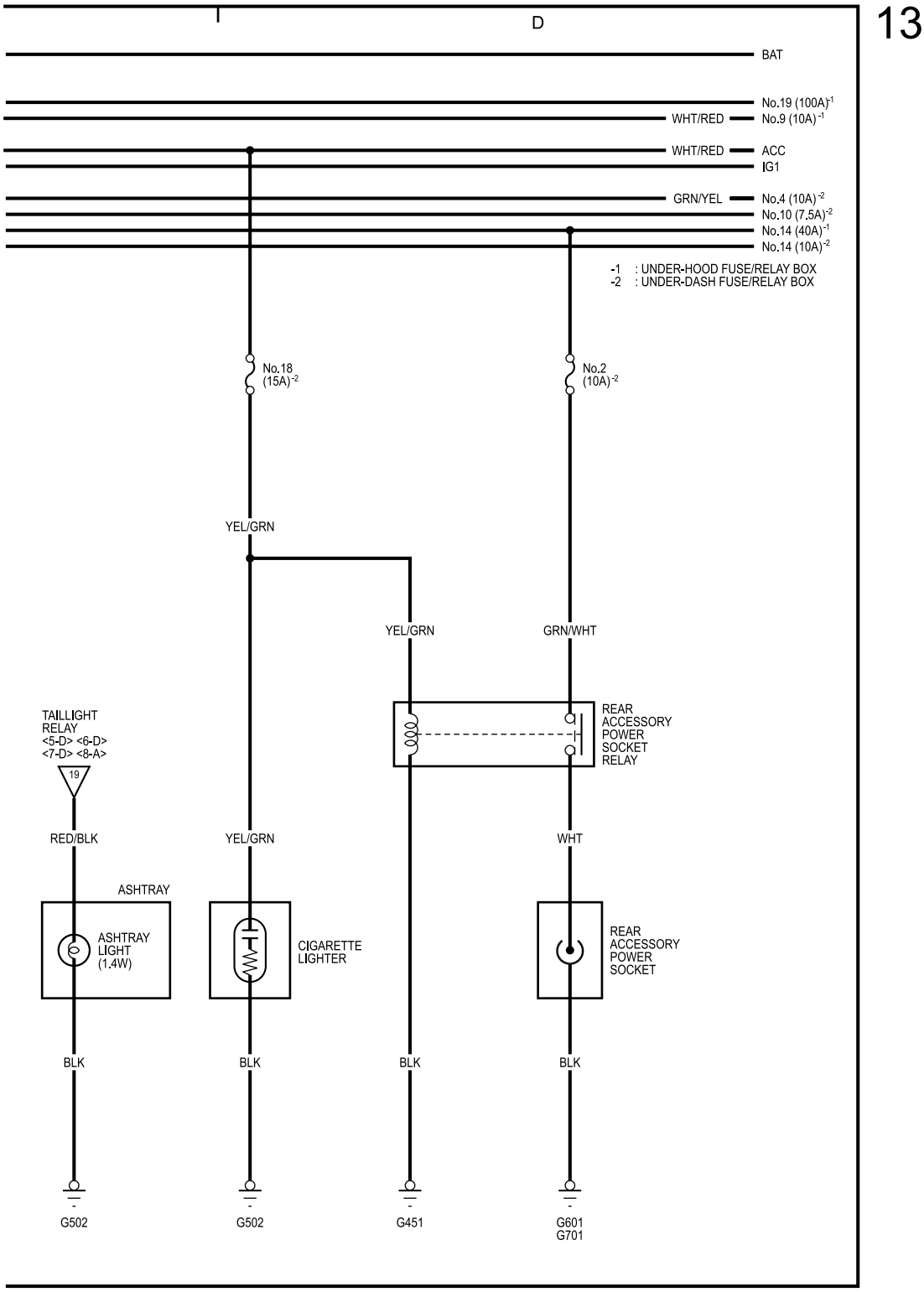

Navigation System, Stereo Sound System

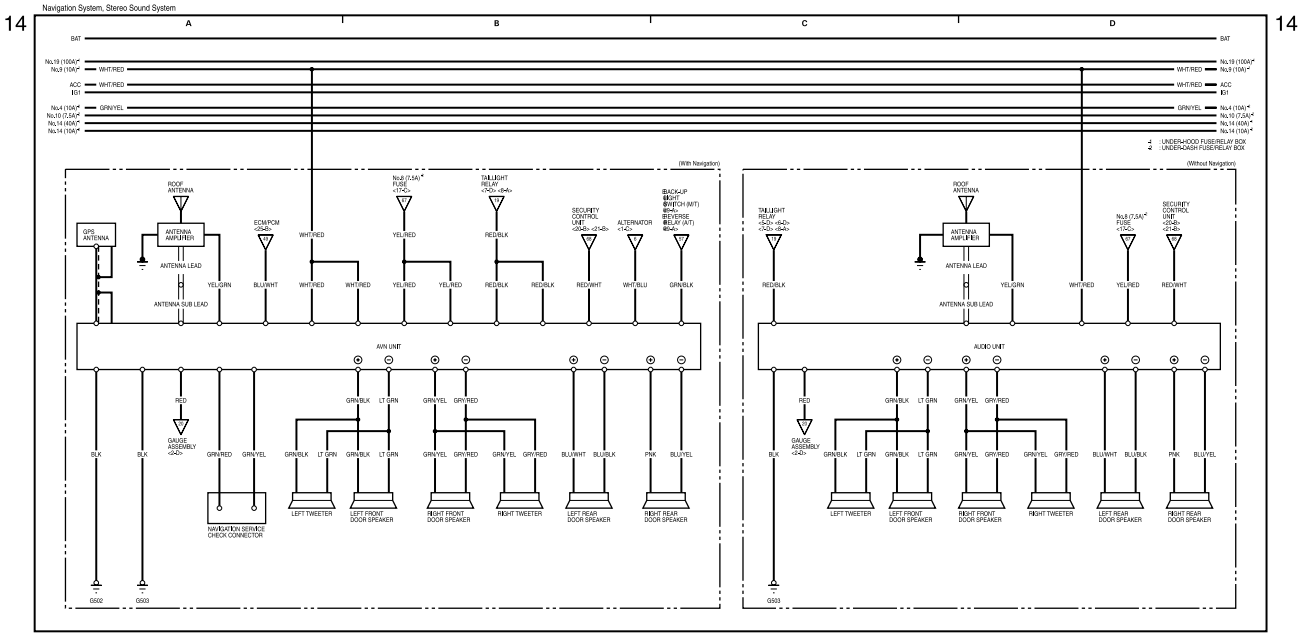

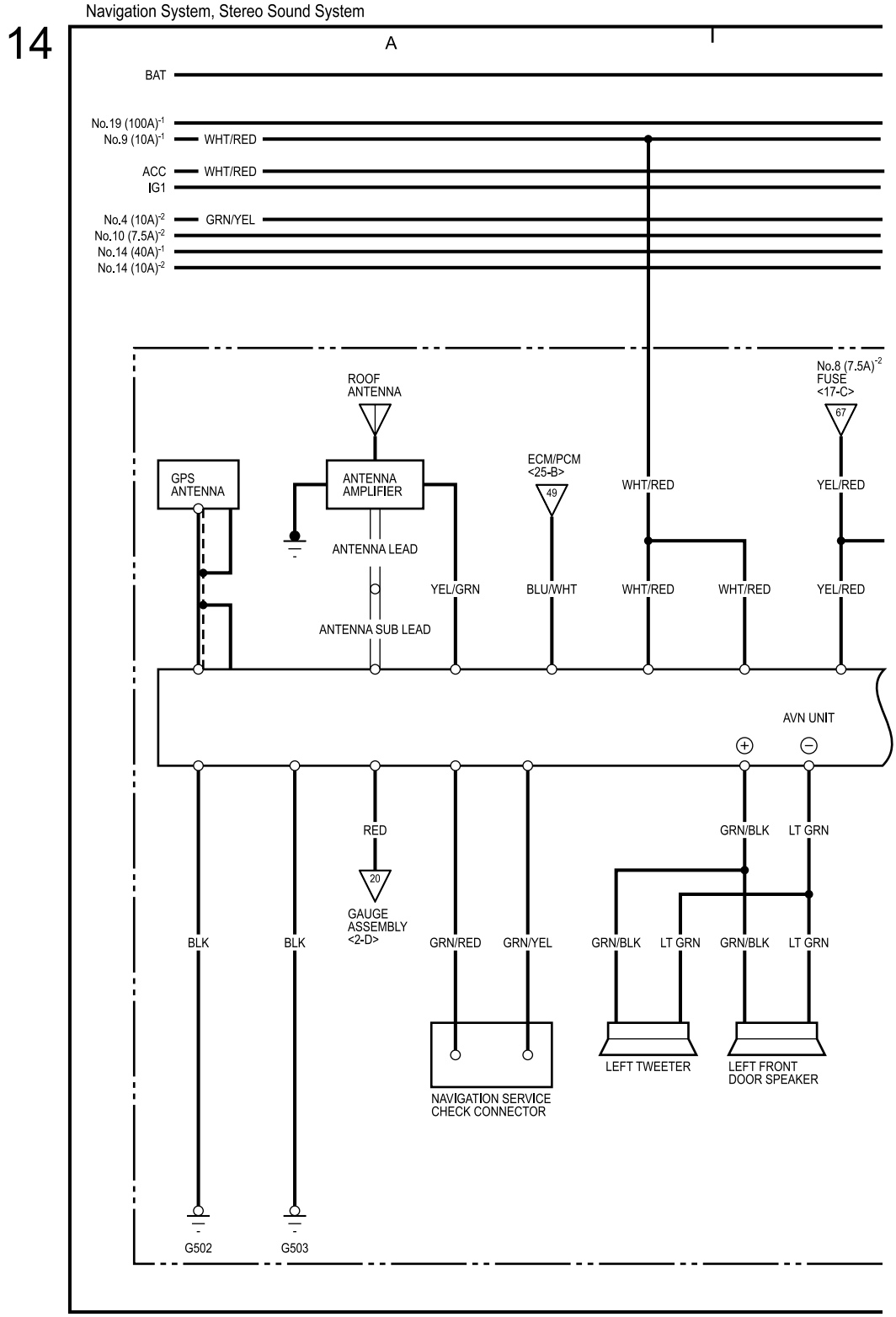
Navigation System, Stereo Sound System
14
A
BAT
No.19 (100A)-1
No.9 (10A)-1
WHT/RED
ACC
IG1
WHT/RED
No.4 (10A)-2
No.10 (7.5A)-2
No.14 (40A)-1
No.14 (10A)-2
GRN/YEL
ROOF ANTENNA
GPS ANTENNA
ANTENNA AMPLIFIER
ANTENNA LEAD
ANTENNA SUB LEAD
ECM/PCM <25-B>
49
No.8 (7.5A)-2 FUSE <17-C>
67
WHT/RED
YEL/RED
YEL/GRN
BLU/WHT
WHT/RED
WHT/RED
YEL/RED
AVN UNIT
RED
20
GAUGE ASSEMBLY <2-D>
GRN/BLK
LT GRN
BLK
BLK
GRN/RED
GRN/YEL
GRN/BLK
LT GRN
GRN/BLK
LT GRN
NAVIGATION SERVICE CHECK CONNECTOR
LEFT TWEETER
LEFT FRONT DOOR SPEAKER
G502
G503

Navigation System, Stereo Sound System (cont'd)

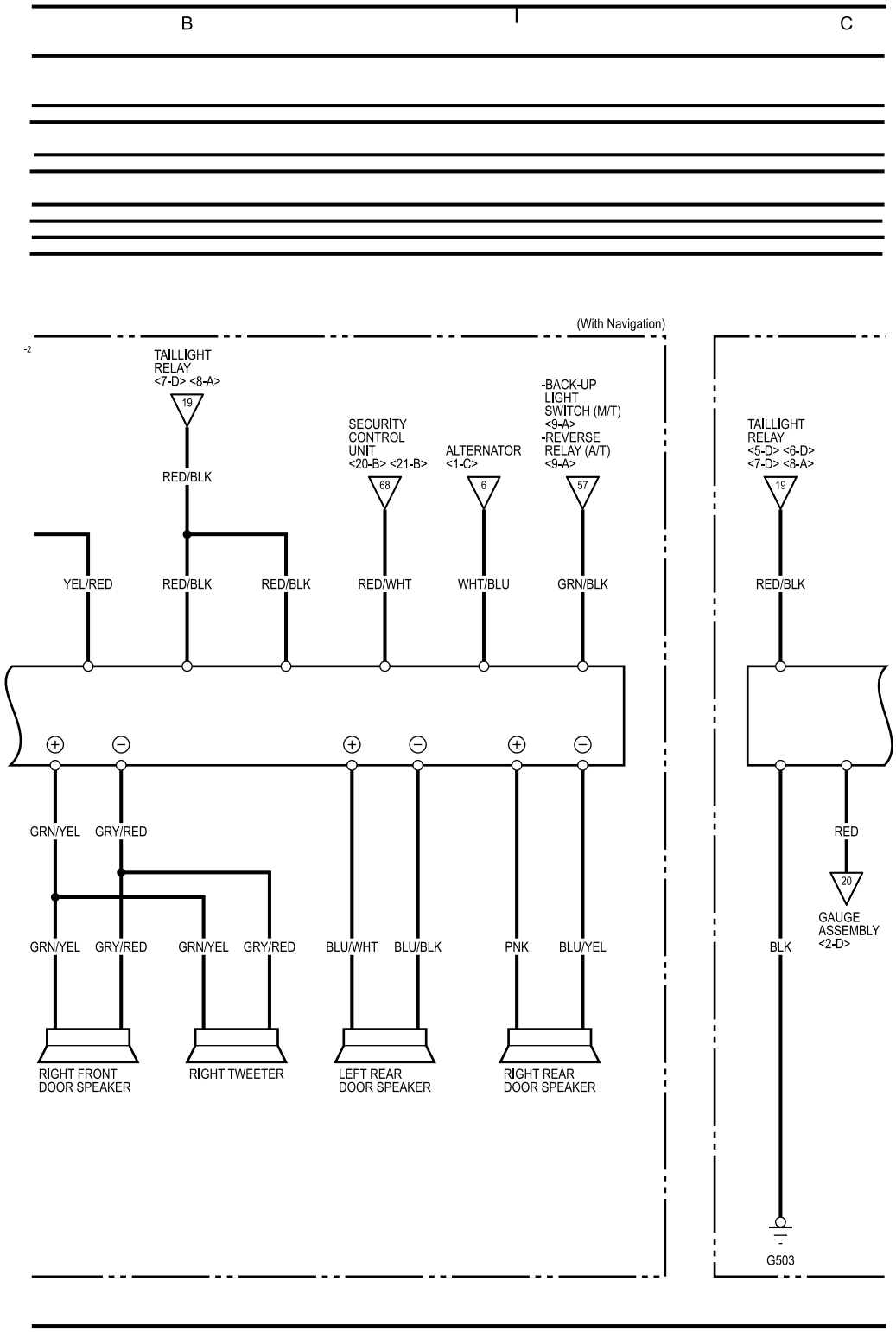

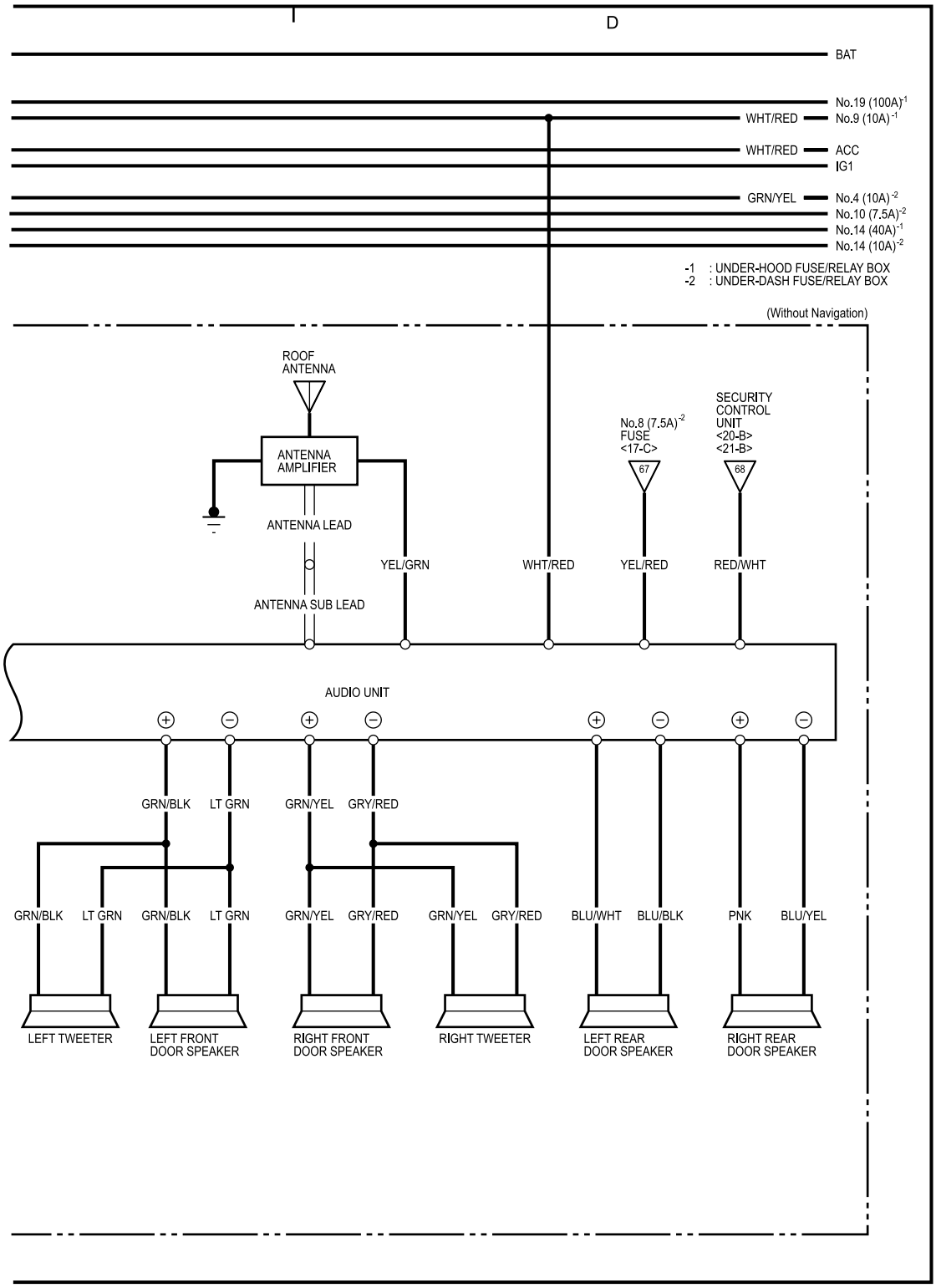
14
D
BAT
No.19 (100A)-1
WHT/RED
No.9 (10A)-1
WHT/RED
ACC
IG1
GRN/YEL
No.4 (10A)-2
No.10 (7.5A)-2
No.14 (40A)-1
No.14 (10A)-2
-1 : UNDER-HOOD FUSE/RELAY BOX
-2 : UNDER-DASH FUSE/RELAY BOX
(Without Navigation)
ROOF ANTENNA
ANTENNA AMPLIFIER
ANTENNA LEAD
ANTENNA SUB LEAD
YEL/GRN
WHT/RED
No.8 (7.5A)-2 FUSE <17-C>
67
YEL/RED
SECURITY CONTROL UNIT <20-B> <21-B>
68
RED/WHT
AUDIO UNIT
GRN/BLK
LT GRN
GRN/YEL
GRY/RED
GRN/BLK
LT GRN
GRN/BLK
LT GRN
GRN/YEL
GRY/RED
GRN/YEL
GRY/RED
BLU/WHT
BLU/BLK
PNK
BLU/YEL
LEFT TWEETER
LEFT FRONT DOOR SPEAKER
RIGHT FRONT DOOR SPEAKER
RIGHT TWEETER
LEFT REAR DOOR SPEAKER
RIGHT REAR DOOR SPEAKER

Seat Heater, Wipers/Washers (Headlight Washer)

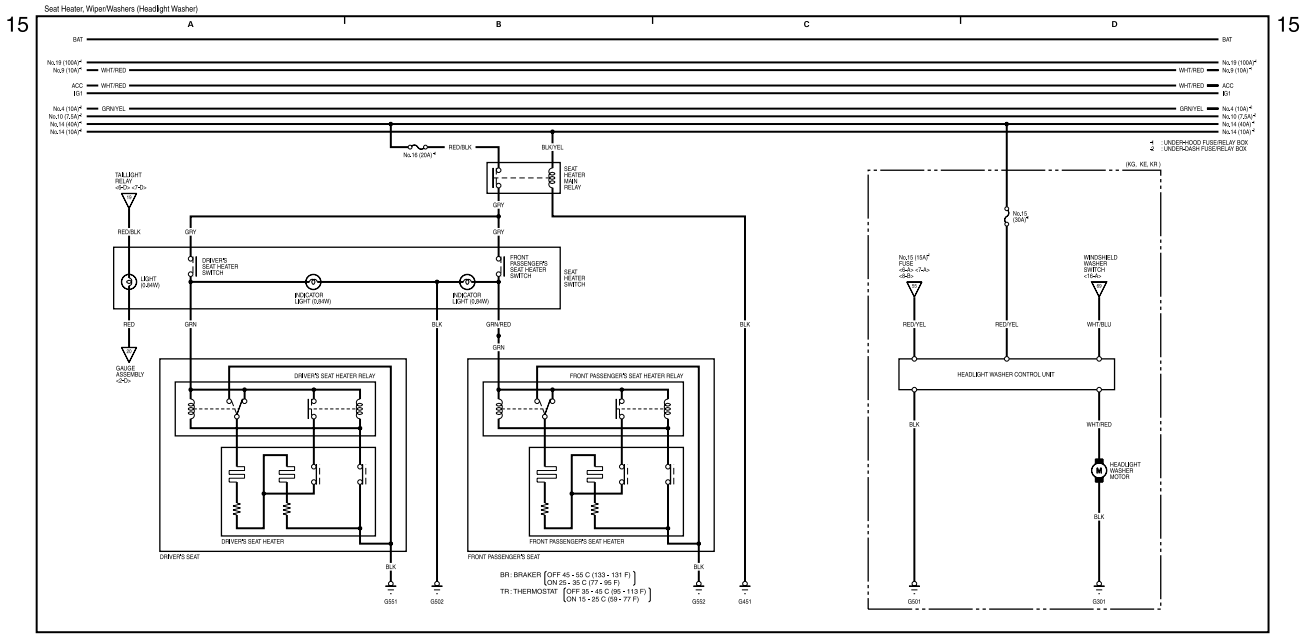

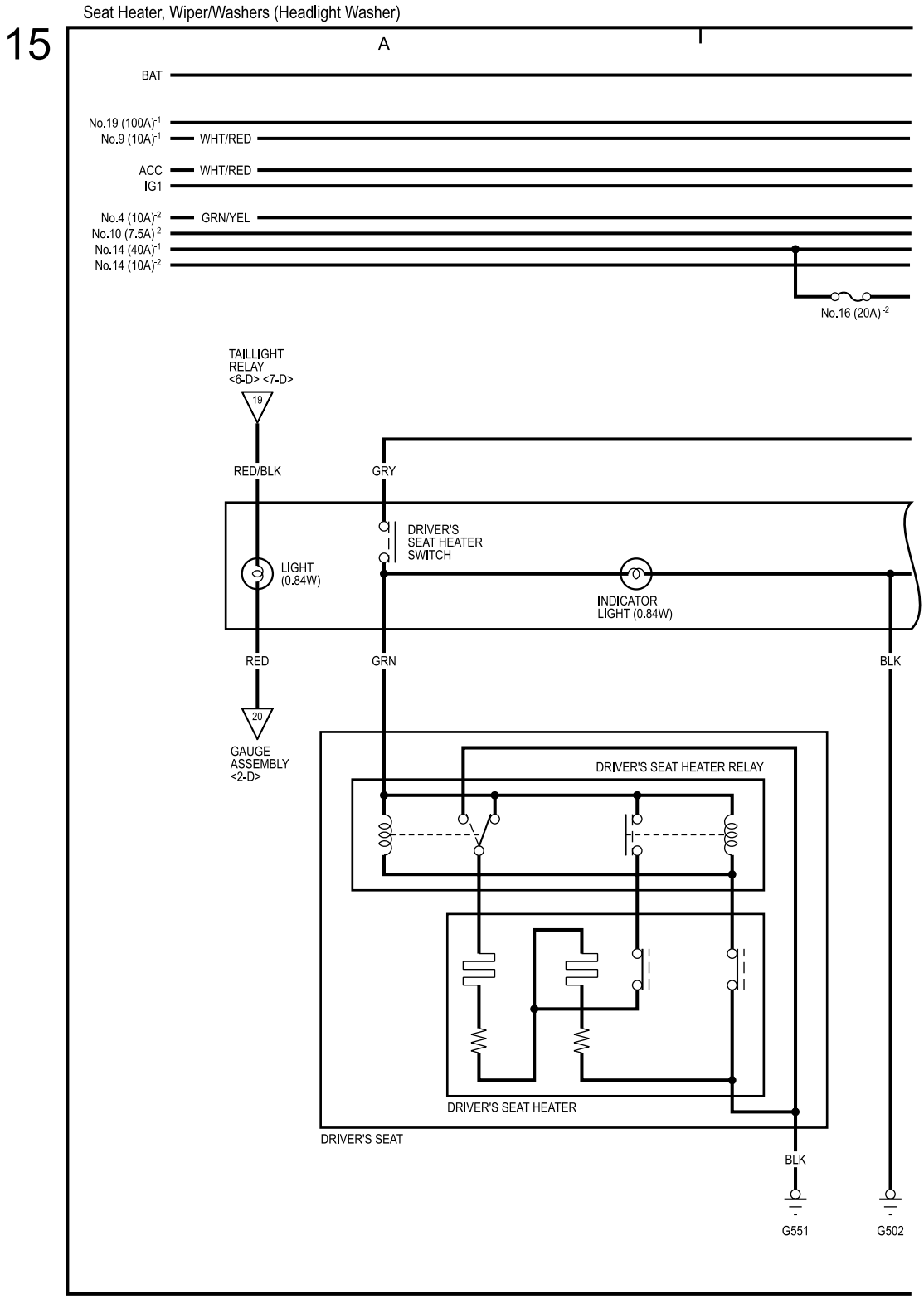
Seat Heater, Wiper/Washers (Headlight Washer)
15
A
BAT
No.19 (100A)-1
No.9 (10A)-1
WHT/RED
ACC
WHT/RED
IG1
No.4 (10A)-2
GRN/YEL
No.10 (7.5A)-2
No.14 (40A)-1
No.14 (10A)-2
No.16 (20A)-2
TAILLIGHT RELAY <6-D> <7-D>
19
RED/BLK
GRY
DRIVER'S SEAT HEATER SWITCH
LIGHT (0.84W)
INDICATOR LIGHT (0.84W)
RED
GRN
BLK
20
GAUGE ASSEMBLY <2-D>
DRIVER'S SEAT HEATER RELAY
DRIVER'S SEAT HEATER
DRIVER'S SEAT
BLK
G551
G502

Seat Heater, Wipers/Washers (Headlight Washer) (cont'd)

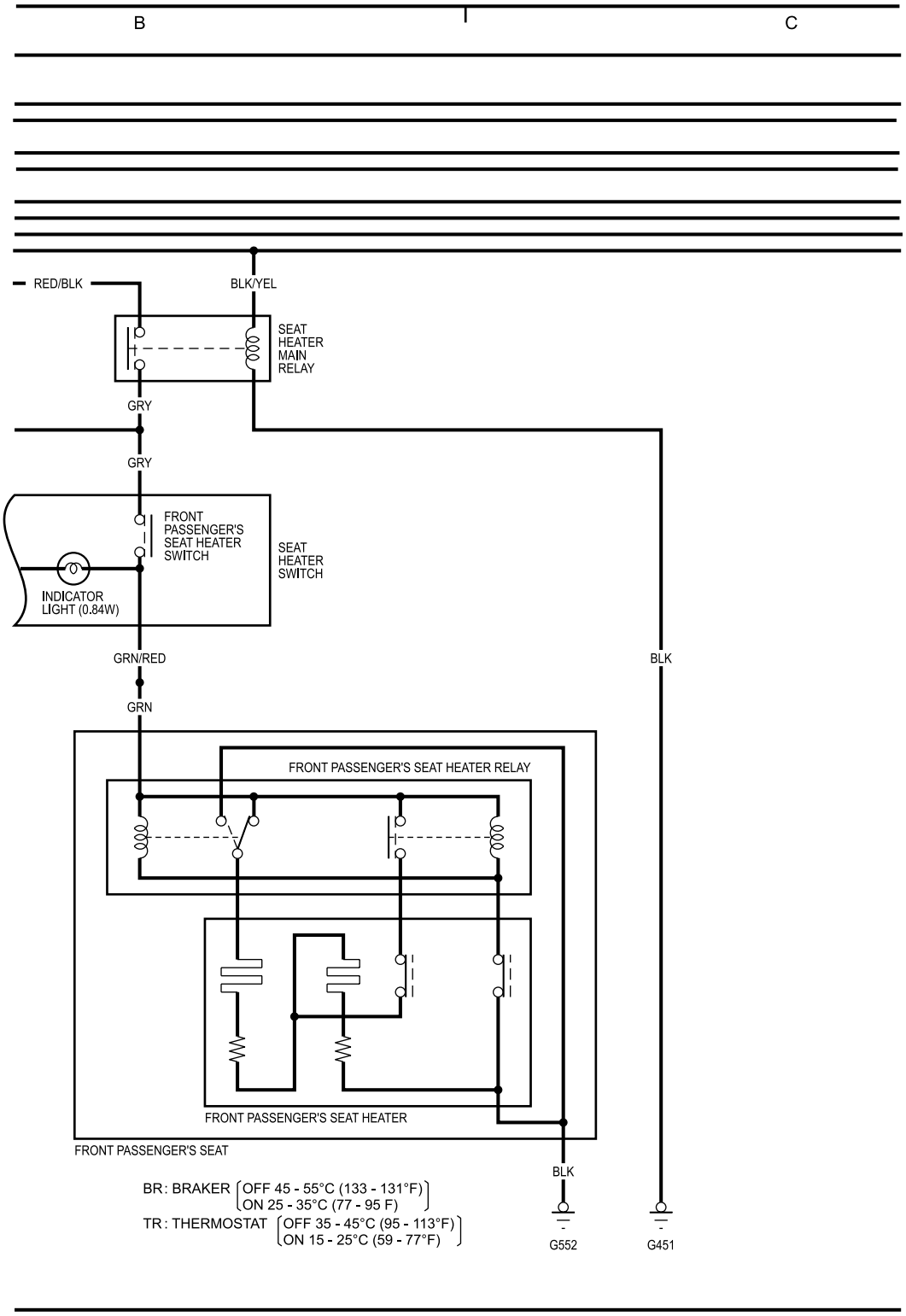

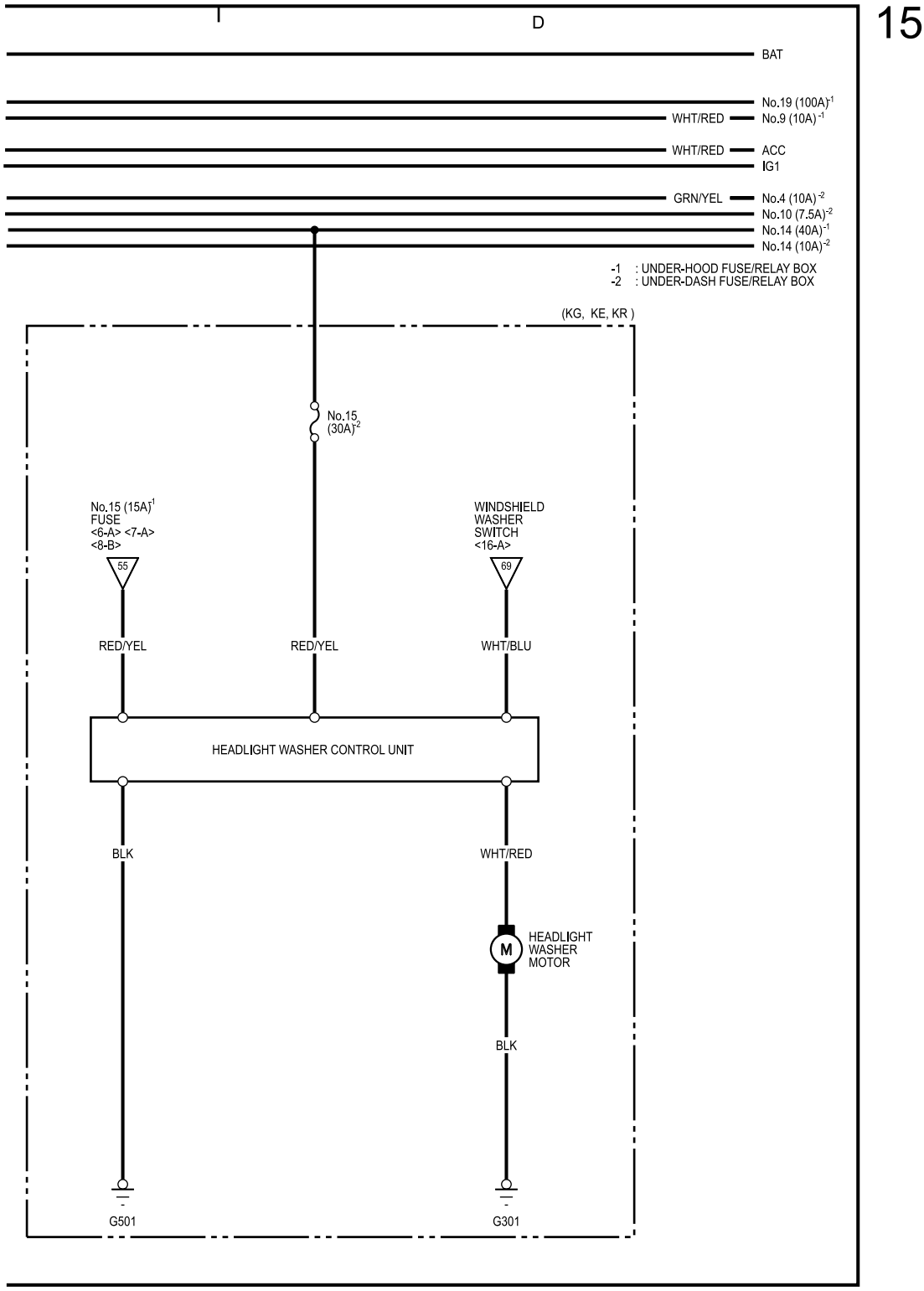
15
I
D
BAT
No.19 (100A)-1
WHT/RED
No.9 (10A) -1
WHT/RED
ACC
IG1
GRN/YEL
No.4 (10A) -2
No.10 (7.5A)-2
No.14 (40A)-1
No.14 (10A)-2
-1 : UNDER-HOOD FUSE/RELAY BOX
-2 : UNDER-DASH FUSE/RELAY BOX
(KG, KE, KR)
No.15
(30A)-2
No.15 (15A)-1
FUSE
<6-A> <7-A>
<8-B>
55
WINDSHIELD
WASHER
SWITCH
<16-A>
69
RED/YEL
RED/YEL
WHT/BLU
HEADLIGHT WASHER CONTROL UNIT
BLK
WHT/RED
M
HEADLIGHT
WASHER
MOTOR
BLK
G501
G301

Wipers/Washers (Windshield Rear)

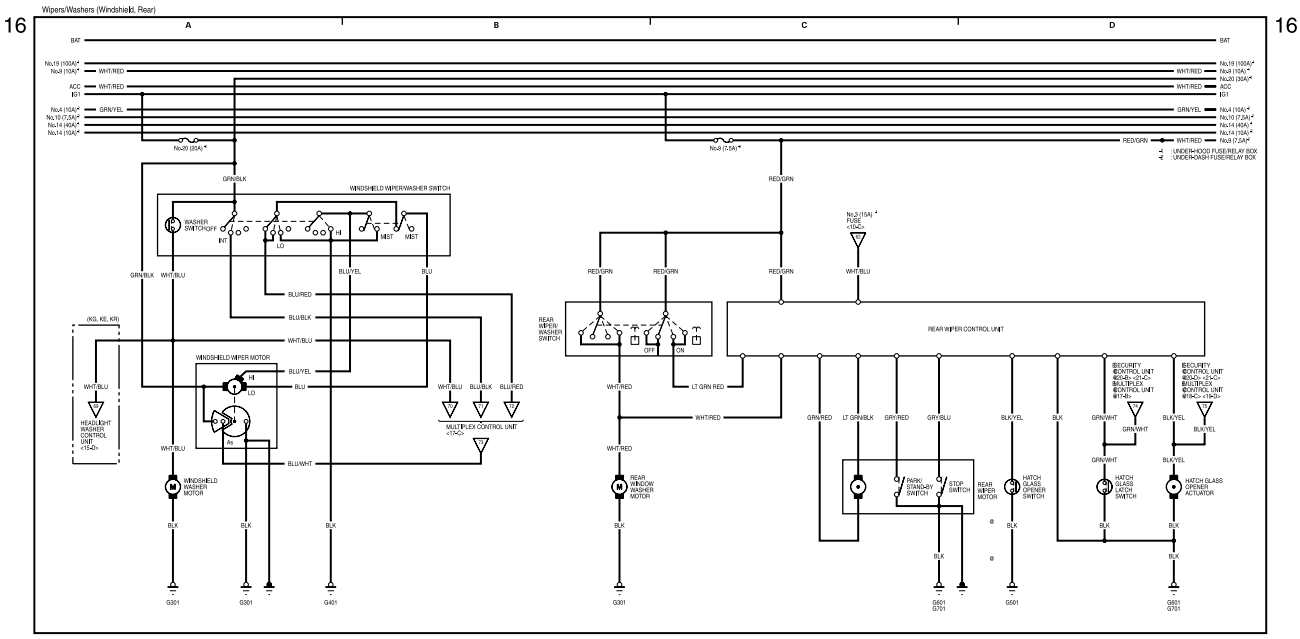

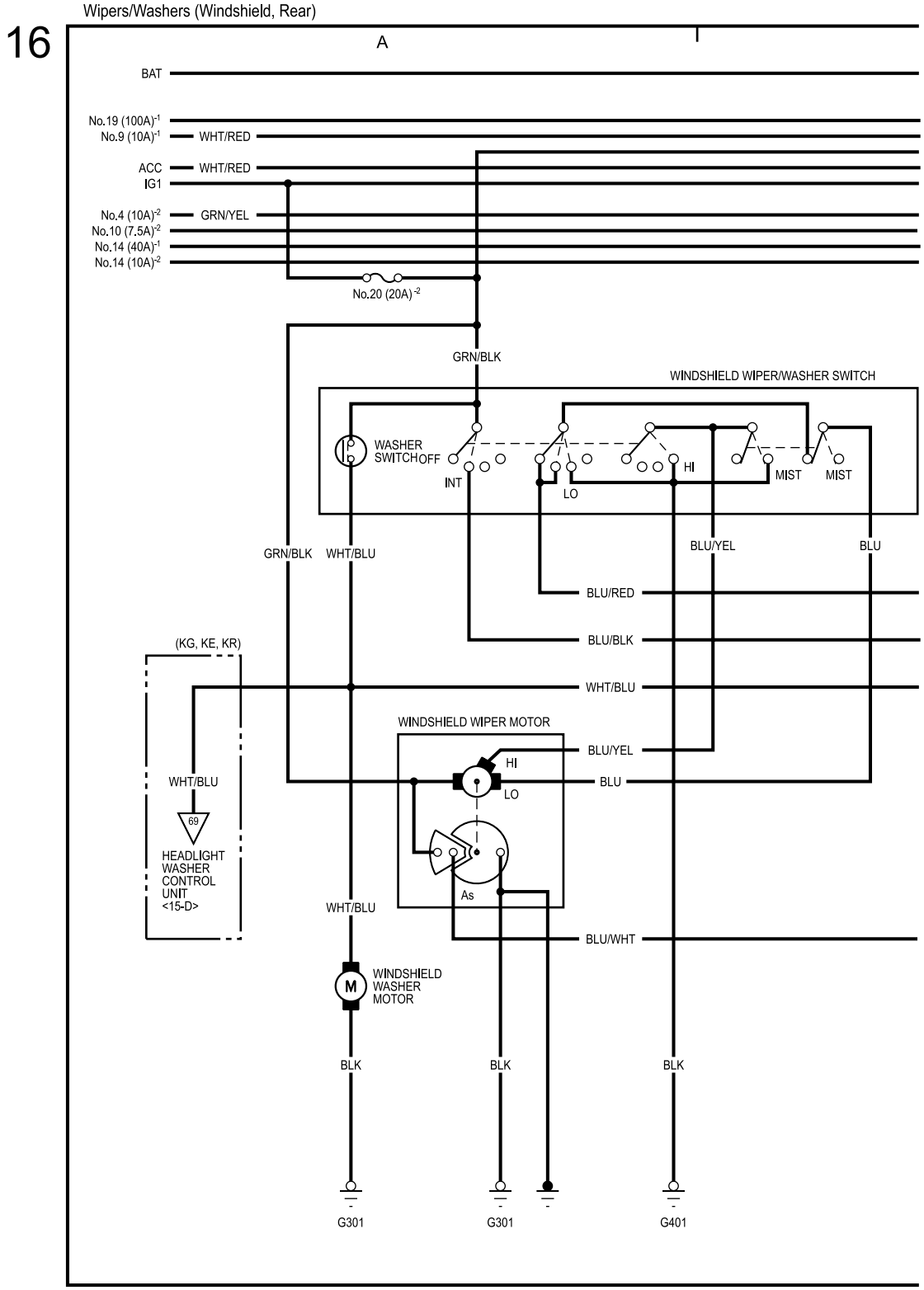
Wipers/Washers (Windshield, Rear)
16
A
BAT
No.19 (100A)-1
No.9 (10A)-1
WHT/RED
ACC
IG1
WHT/RED
No.4 (10A)-2
No.10 (7.5A)-2
No.14 (40A)-1
No.14 (10A)-2
GRN/YEL
No.20 (20A)-2
GRN/BLK
WINDSHIELD WIPER/WASHER SWITCH
WASHER SWITCH
OFF
INT
LO
HI
MIST
MIST
GRN/BLK
WHT/BLU
BLU/YEL
BLU
BLU/RED
BLU/BLK
(KG, KE, KR)
WHT/BLU
WINDSHIELD WIPER MOTOR
BLU/YEL
HI
BLU
LO
WHT/BLU
69
HEADLIGHT WASHER CONTROL UNIT <15-D>
As
WHT/BLU
BLU/WHT
M
WINDSHIELD WASHER MOTOR
BLK
BLK
BLK
G301
G301
G401

Wipers/Washers (Windshield Rear) (cont'd)

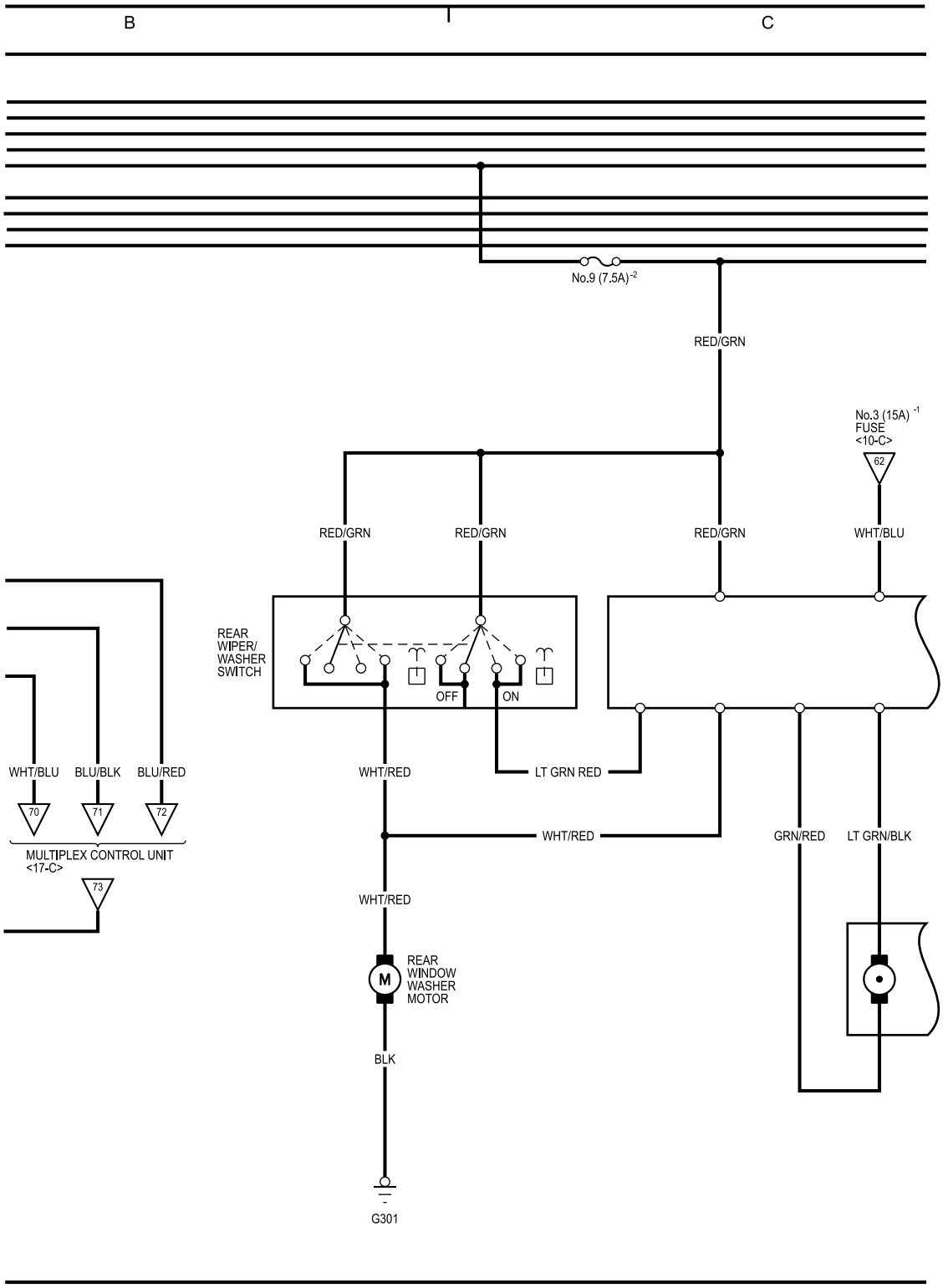

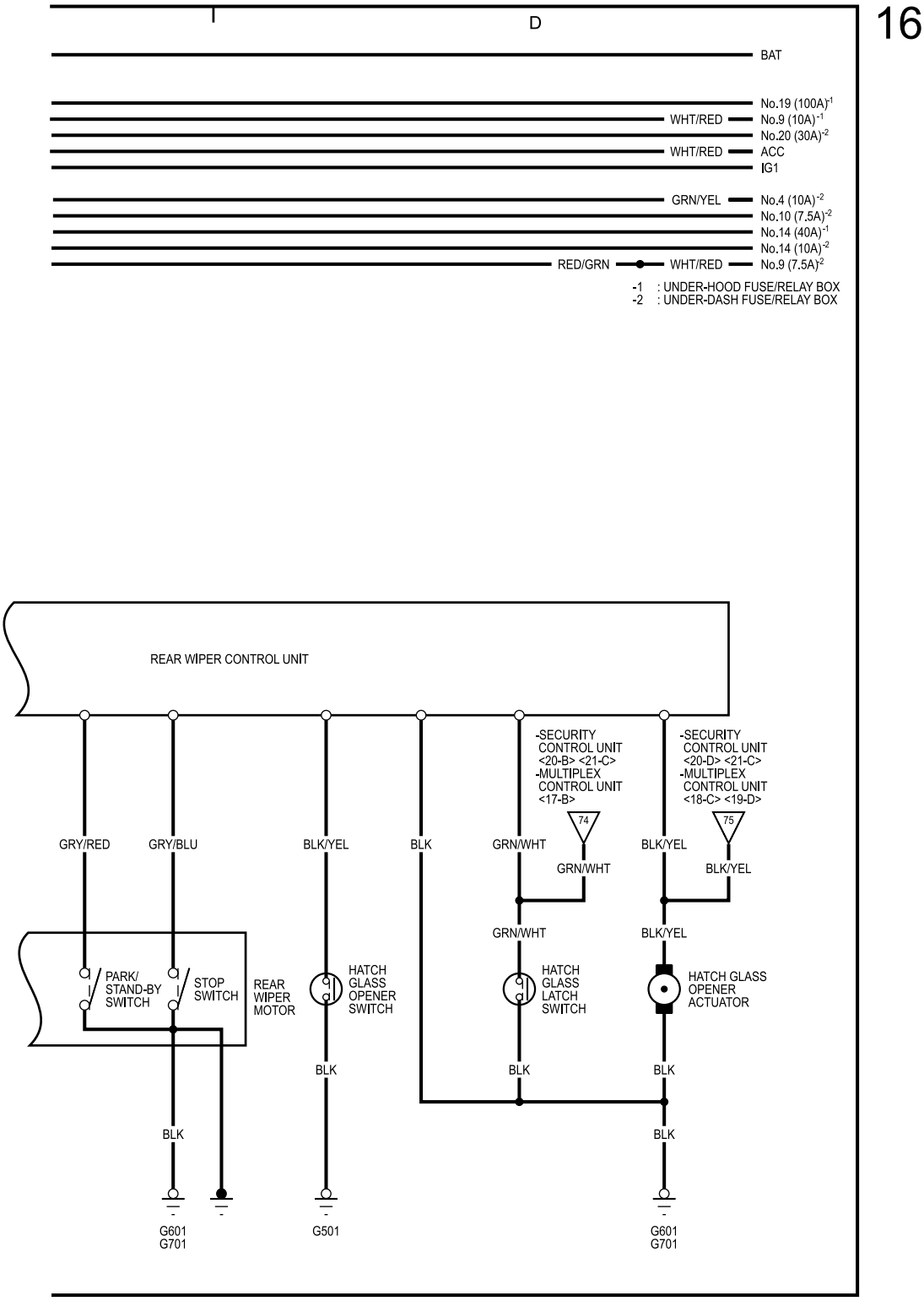
16
I
D
BAT
No.19 (100A)-1
WHT/RED
No.9 (10A)-1
No.20 (30A)-2
WHT/RED
ACC
IG1
GRN/YEL
No.4 (10A)-2
No.10 (7.5A)-2
No.14 (40A)-1
No.14 (10A)-2
RED/GRN
WHT/RED
No.9 (7.5A)-2
-1 : UNDER-HOOD FUSE/RELAY BOX
-2 : UNDER-DASH FUSE/RELAY BOX
REAR WIPER CONTROL UNIT
-SECURITY CONTROL UNIT <20-B> <21-C>
-MULTIPLEX CONTROL UNIT <17-B>
-SECURITY CONTROL UNIT <20-D> <21-C>
-MULTIPLEX CONTROL UNIT <18-C> <19-D>
74
75
GRY/RED
GRY/BLU
BLK/YEL
BLK
GRN/WHT
BLK/YEL
GRN/WHT
BLK/YEL
GRN/WHT
BLK/YEL
PARK/ STAND-BY SWITCH
STOP SWITCH
REAR WIPER MOTOR
HATCH GLASS OPENER SWITCH
HATCH GLASS LATCH SWITCH
HATCH GLASS OPENER ACTUATOR
BLK
BLK
BLK
BLK
BLK
G601
G701
G501
G601
G701

Multiplex Control System (Fog Light Control, Immobilizer Control, Interlock Control, Intermittent Wiper Control, Entry Lights Control)

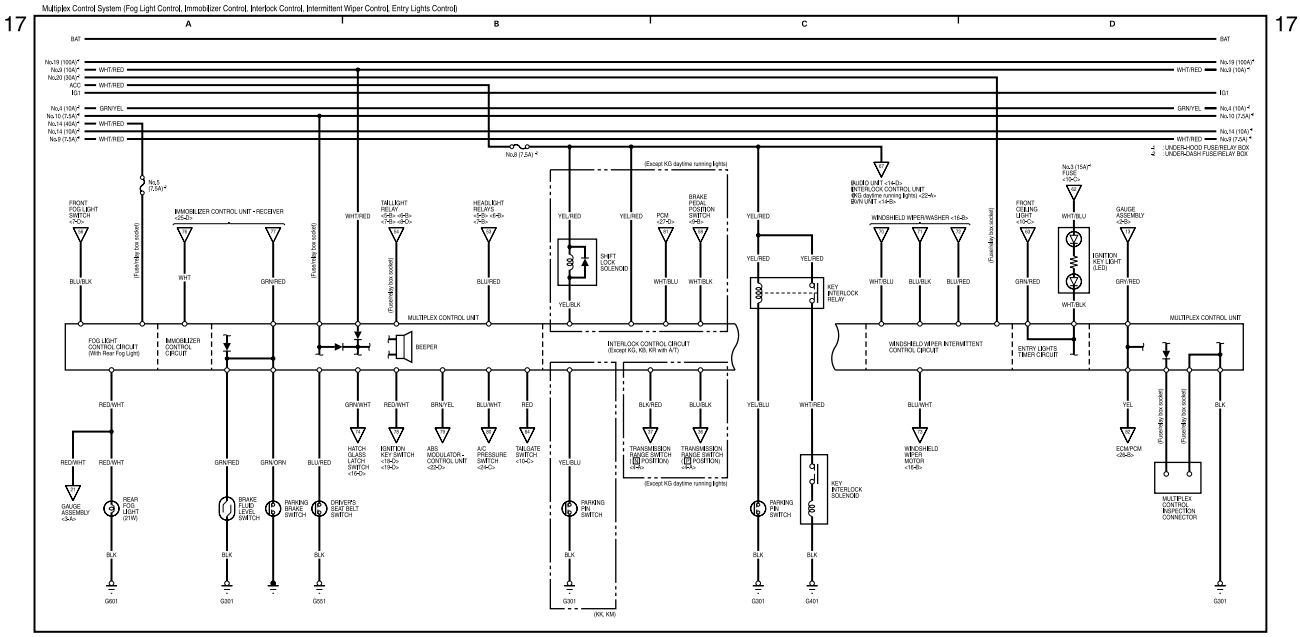

Multiplex Control system (Fog Light Control, Immobilizer Control, Interlock Control, Intermittent Wiper Control, Entry Lights Control) (cont'd)

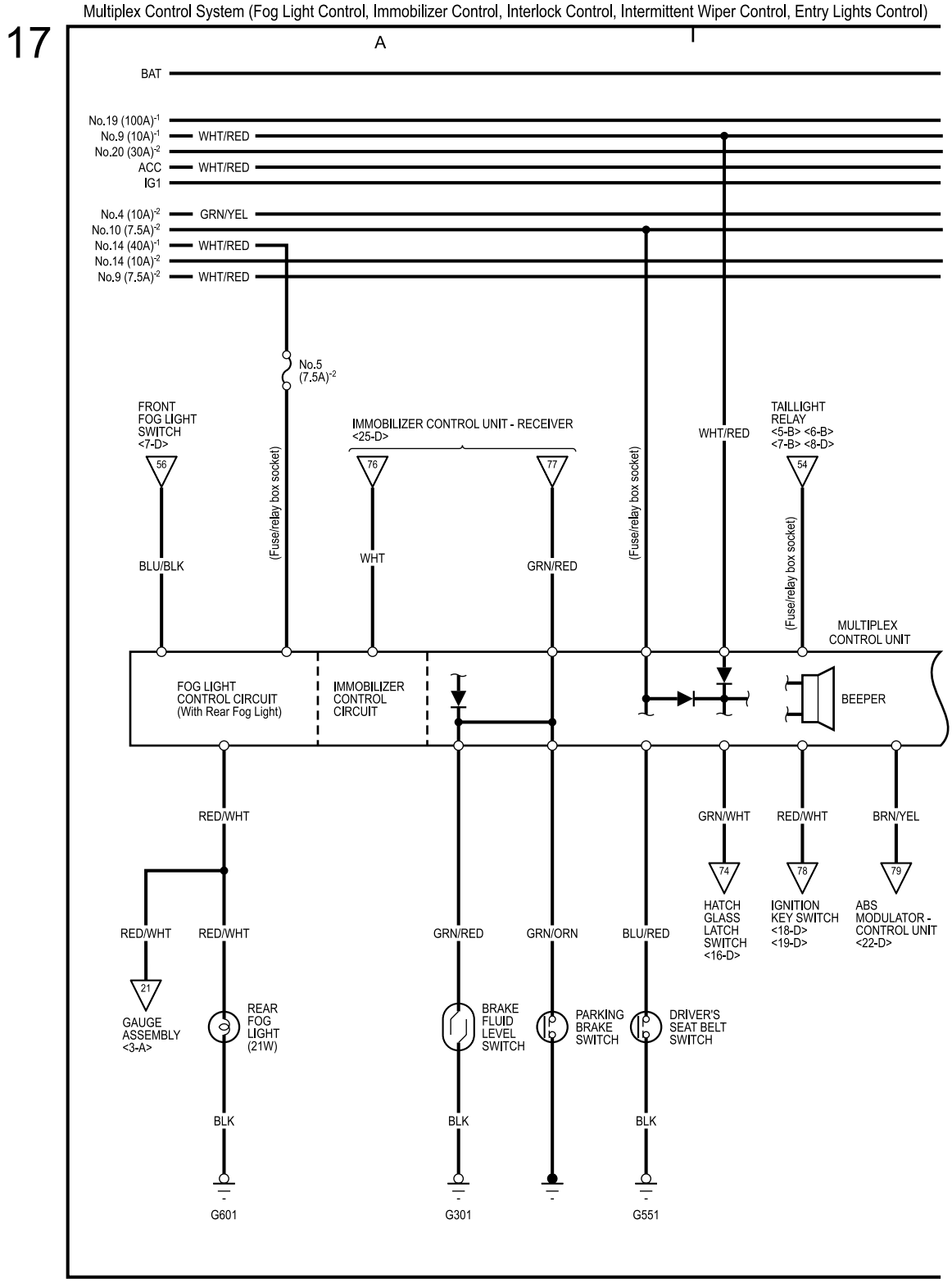

Multiplex Control system (Fog Light Control, Immobilizer Control, Interlock Control, Intermittent Wiper Control, Entry Lights Control) (cont'd)

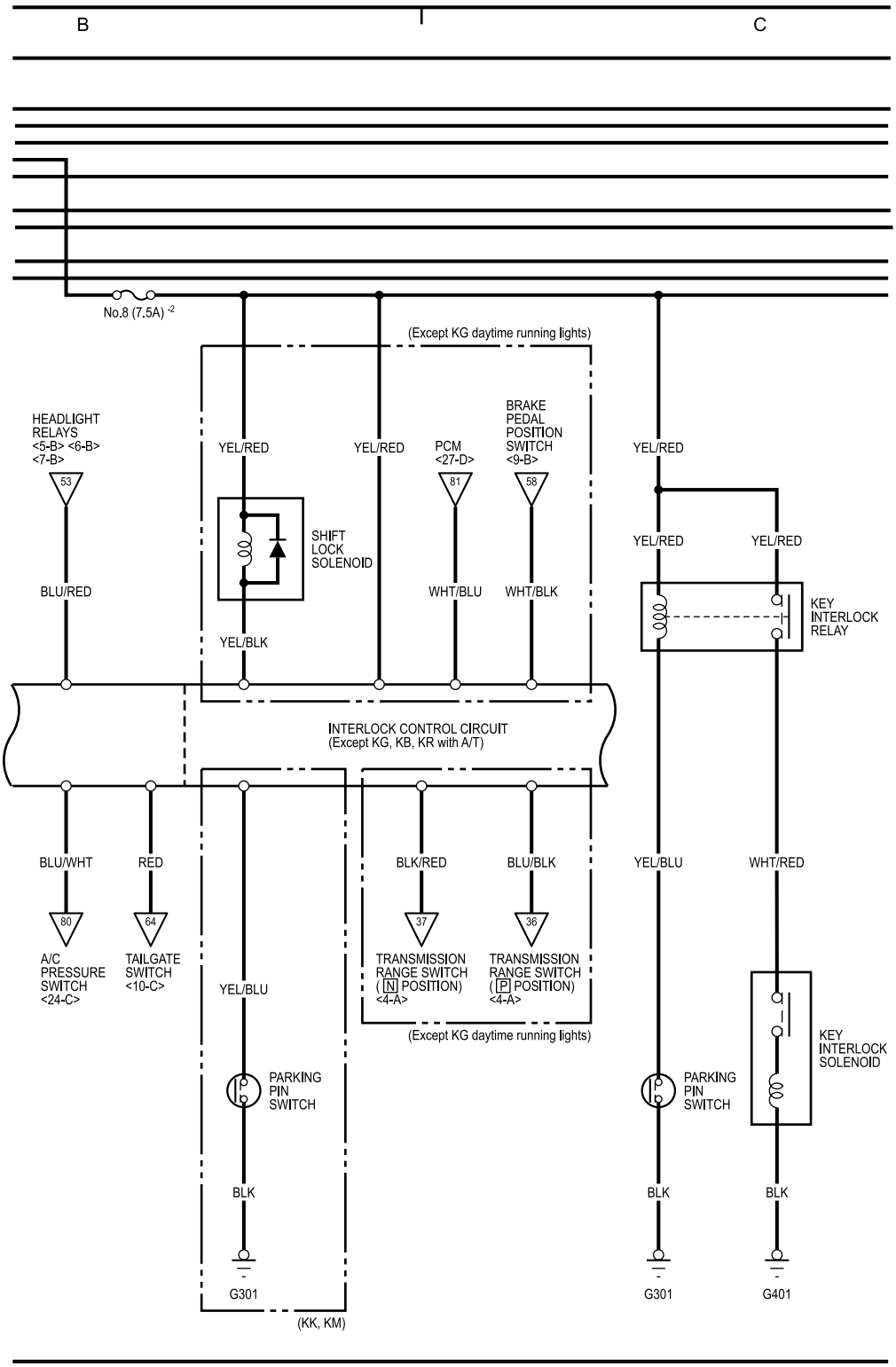

Multiplex Control system (Fog Light Control, Immobilizer Control, Interlock Control, Intermittent Wiper Control, Entry Lights Control) (cont'd)

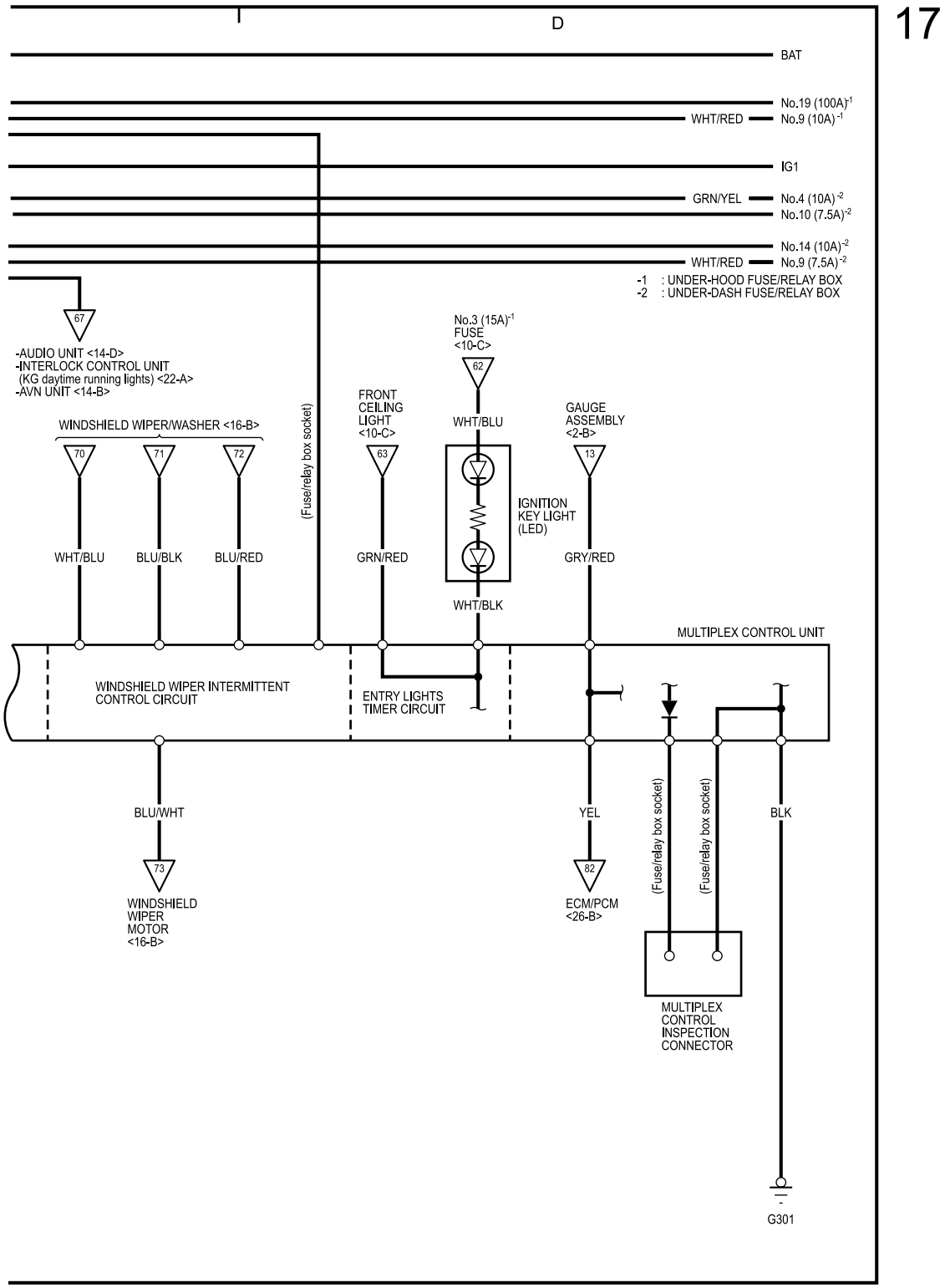

Keyless/Power Door Lock System (With Super locking System)

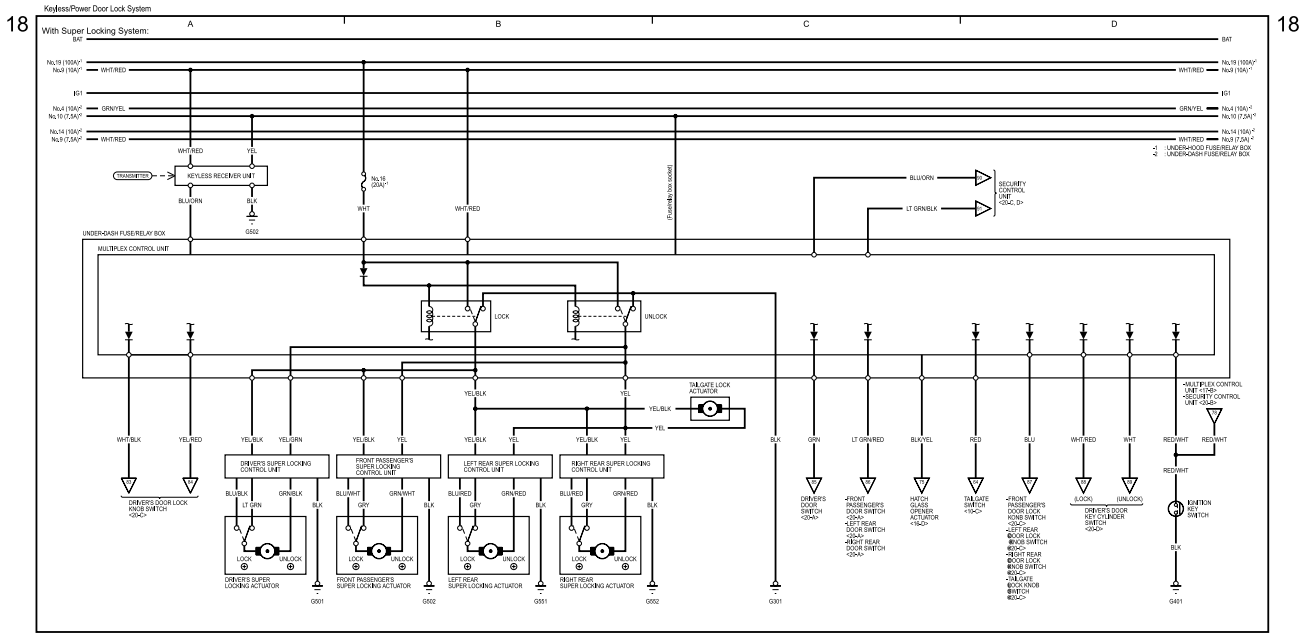

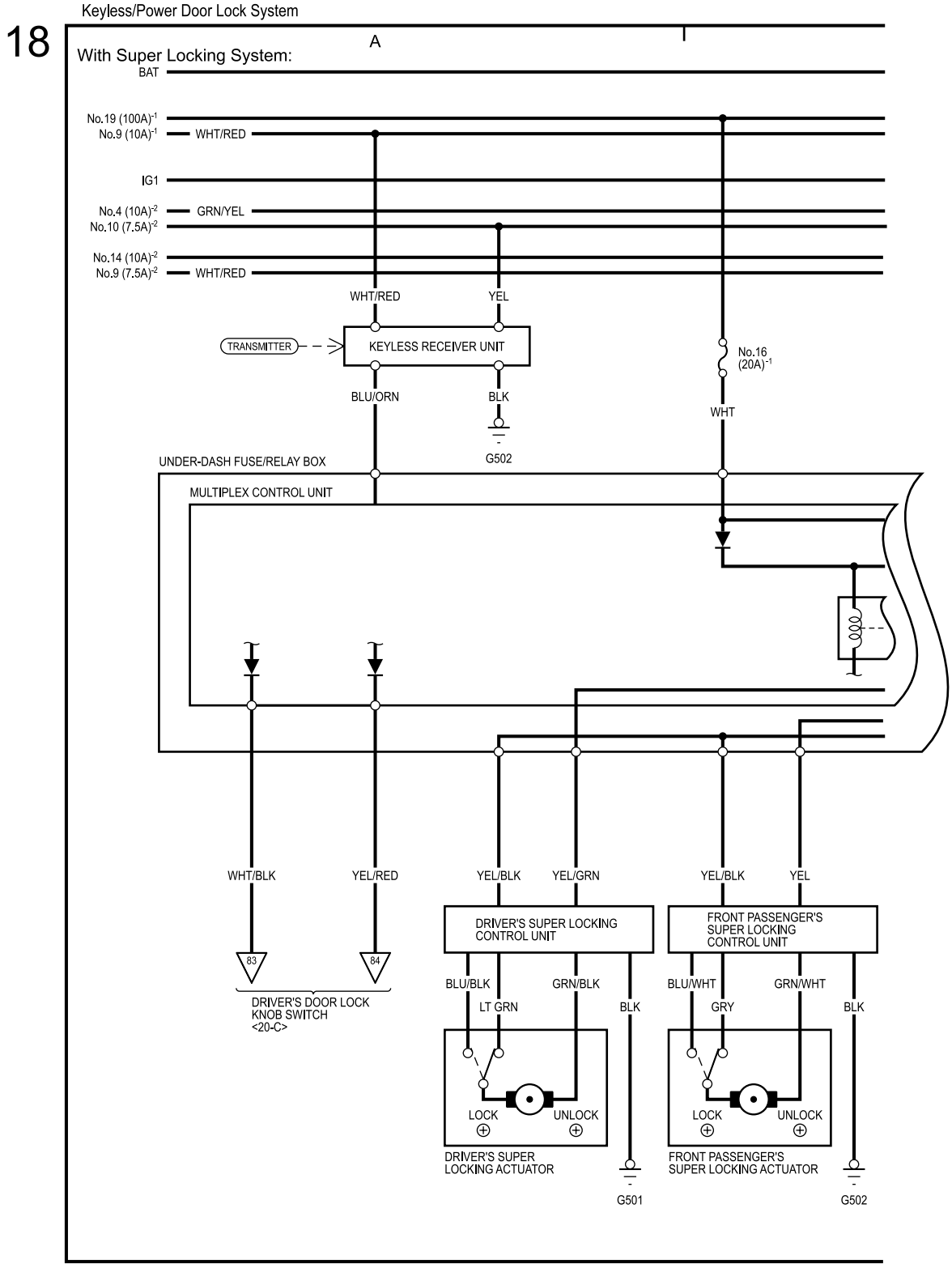
Keyless/Power Door Lock System
18
A
With Super Locking System:
BAT
No.19 (100A)-1
No.9 (10A)-1
WHT/RED
IG1
No.4 (10A)-2
GRN/YEL
No.10 (7.5A)-2
No.14 (10A)-2
No.9 (7.5A)-2
WHT/RED
WHT/RED
YEL
TRANSMITTER
KEYLESS RECEIVER UNIT
No.16 (20A)-1
BLU/ORN
BLK
WHT
G502
UNDER-DASH FUSE/RELAY BOX
MULTIPLEX CONTROL UNIT
WHT/BLK
YEL/RED
YEL/BLK
YEL/GRN
YEL/BLK
YEL
DRIVER'S SUPER LOCKING CONTROL UNIT
FRONT PASSENGER'S SUPER LOCKING CONTROL UNIT
83
84
DRIVER'S DOOR LOCK KNOB SWITCH <20-C>
BLU/BLK
GRN/BLK
LT GRN
BLK
BLU/WHT
GRN/WHT
GRY
BLK
LOCK
UNLOCK
LOCK
UNLOCK
DRIVER'S SUPER LOCKING ACTUATOR
FRONT PASSENGER'S SUPER LOCKING ACTUATOR
G501
G502

Keyless/Power Door Lock System (With Super locking System) (cont'd)

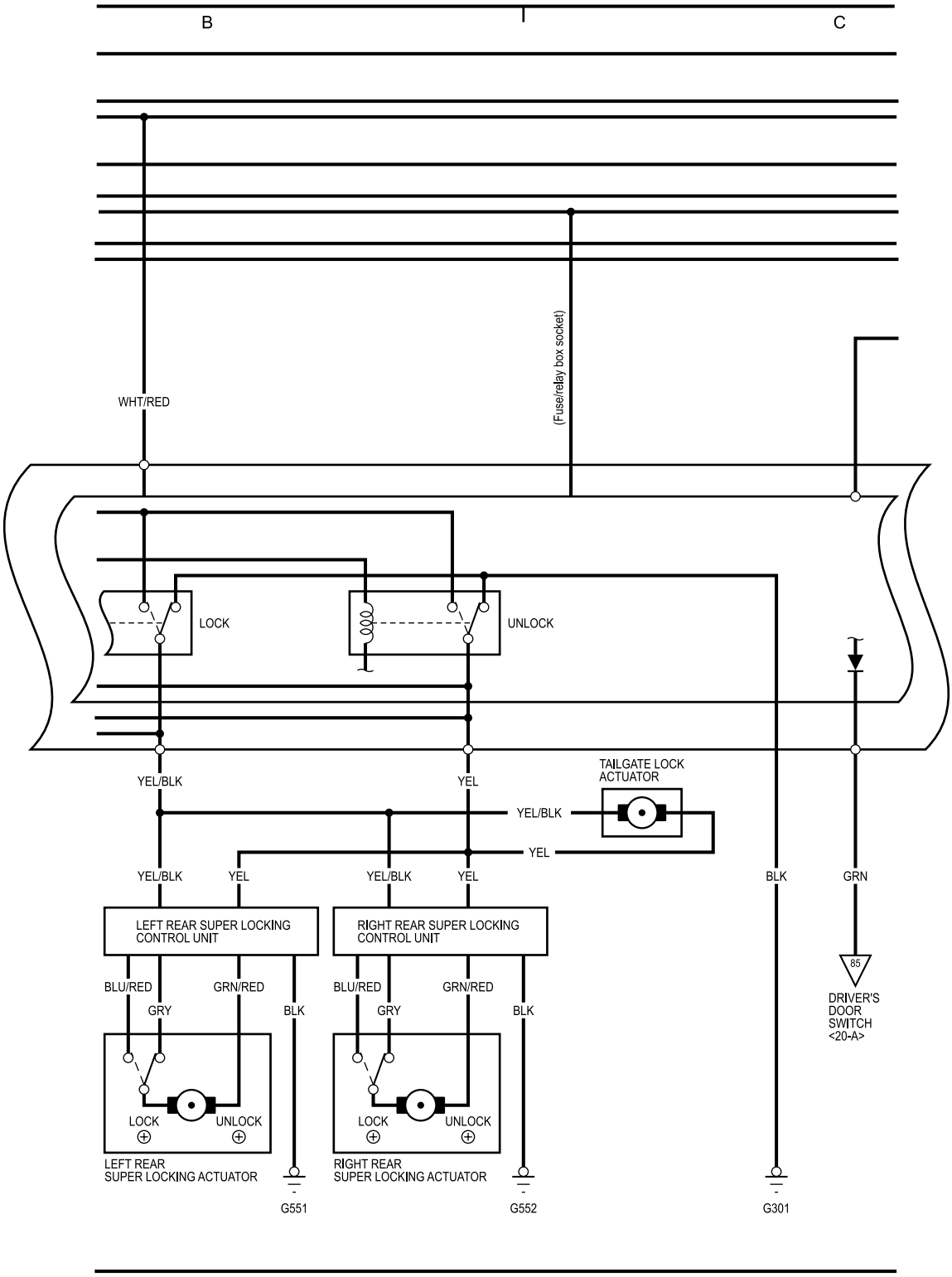

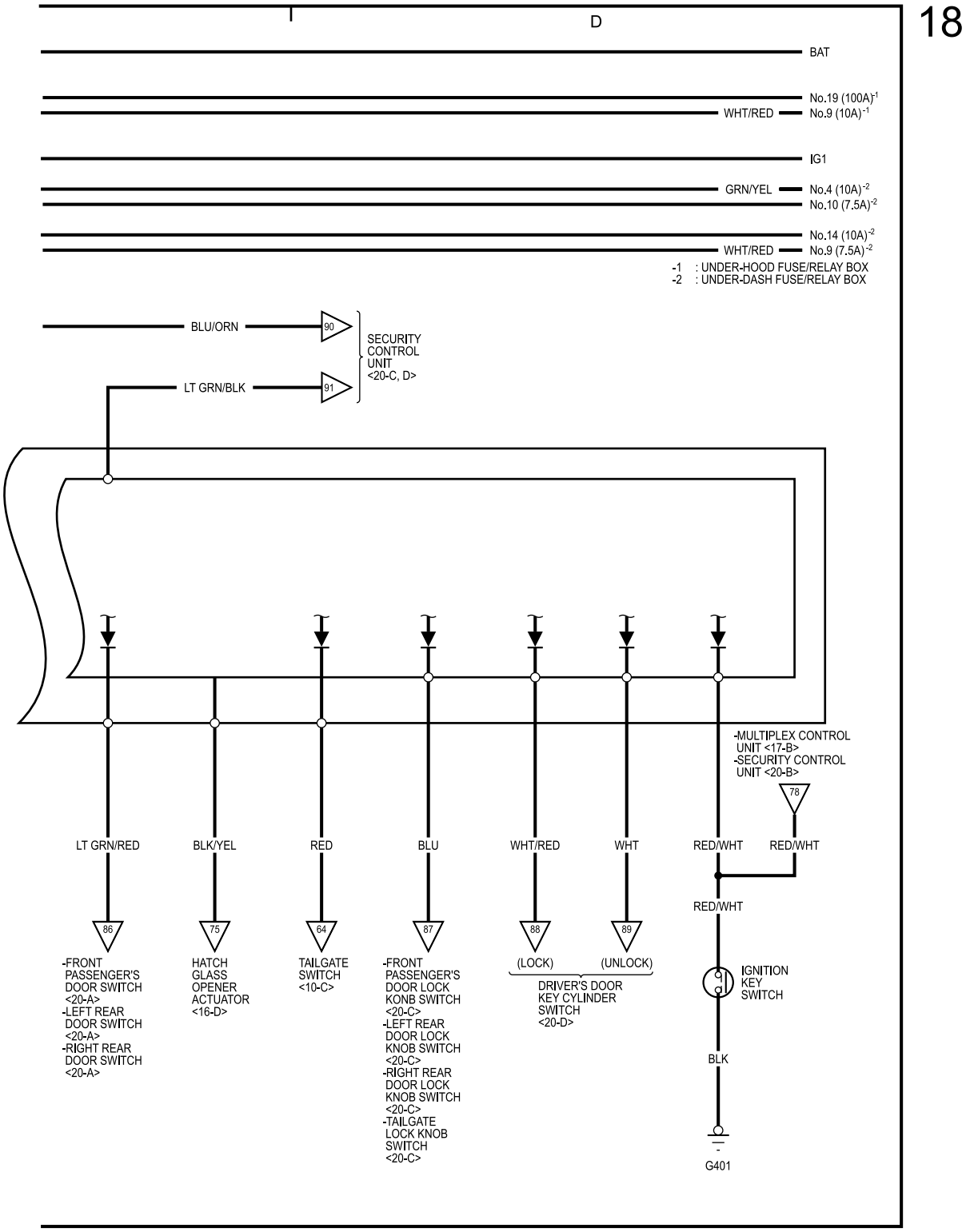
18
I
D
BAT
No.19 (100A)-1
WHT/RED
No.9 (10A)-1
IG1
GRN/YEL
No.4 (10A)-2
No.10 (7.5A)-2
No.14 (10A)-2
WHT/RED
No.9 (7.5A)-2
-1 : UNDER-HOOD FUSE/RELAY BOX
-2 : UNDER-DASH FUSE/RELAY BOX
BLU/ORN
90
LT GRN/BLK
91
SECURITY CONTROL UNIT <20-C, D>
-MULTIPLEX CONTROL UNIT <17-B>
-SECURITY CONTROL UNIT <20-B>
78
LT GRN/RED
BLK/YEL
RED
BLU
WHT/RED
WHT
RED/WHT
RED/WHT
RED/WHT
86
75
64
87
88
89
-FRONT PASSENGER'S DOOR SWITCH <20-A>
-LEFT REAR DOOR SWITCH <20-A>
-RIGHT REAR DOOR SWITCH <20-A>
HATCH GLASS OPENER ACTUATOR <16-D>
TAILGATE SWITCH <10-C>
-FRONT PASSENGER'S DOOR LOCK KONB SWITCH <20-C>
-LEFT REAR DOOR LOCK KNOB SWITCH <20-C>
-RIGHT REAR DOOR LOCK KNOB SWITCH <20-C>
-TAILGATE LOCK KNOB SWITCH <20-C>
(LOCK)
(UNLOCK)
DRIVER'S DOOR KEY CYLINDER SWITCH <20-D>
IGNITION KEY SWITCH
BLK
G401

Keyless/Power Door Lock System (Without Super locking System)

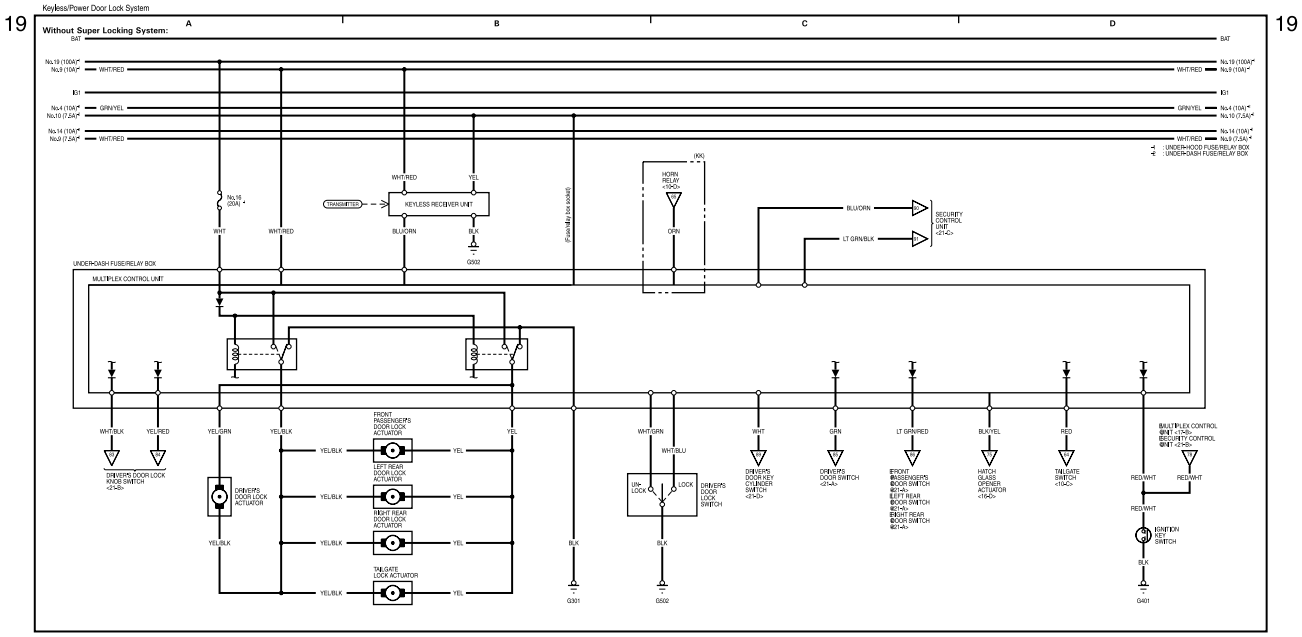

Keyless/Power Door Lock System (Without Super locking System) (cont'd)

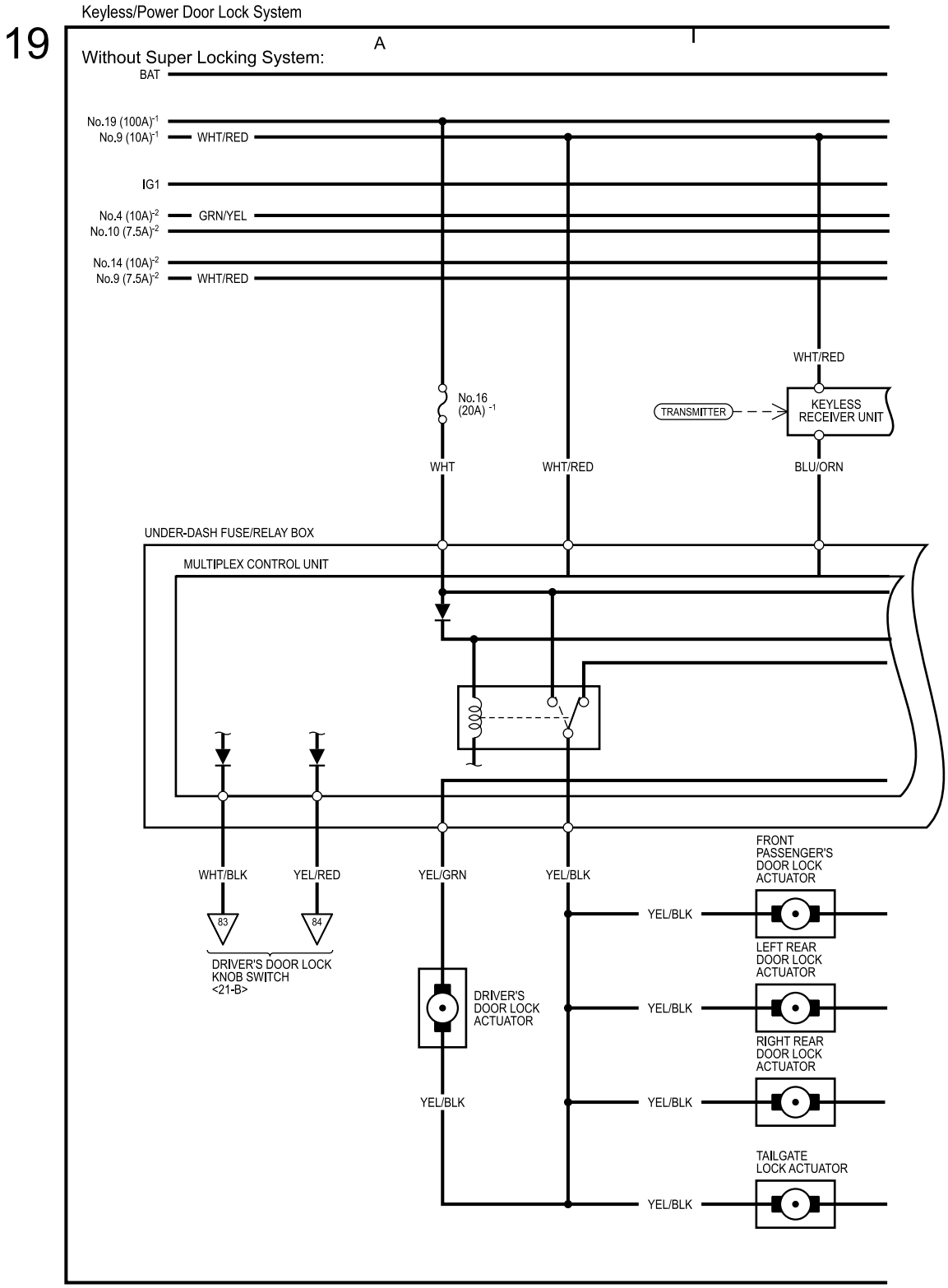

Keyless/Power Door Lock System (Without Super locking System) (cont'd)

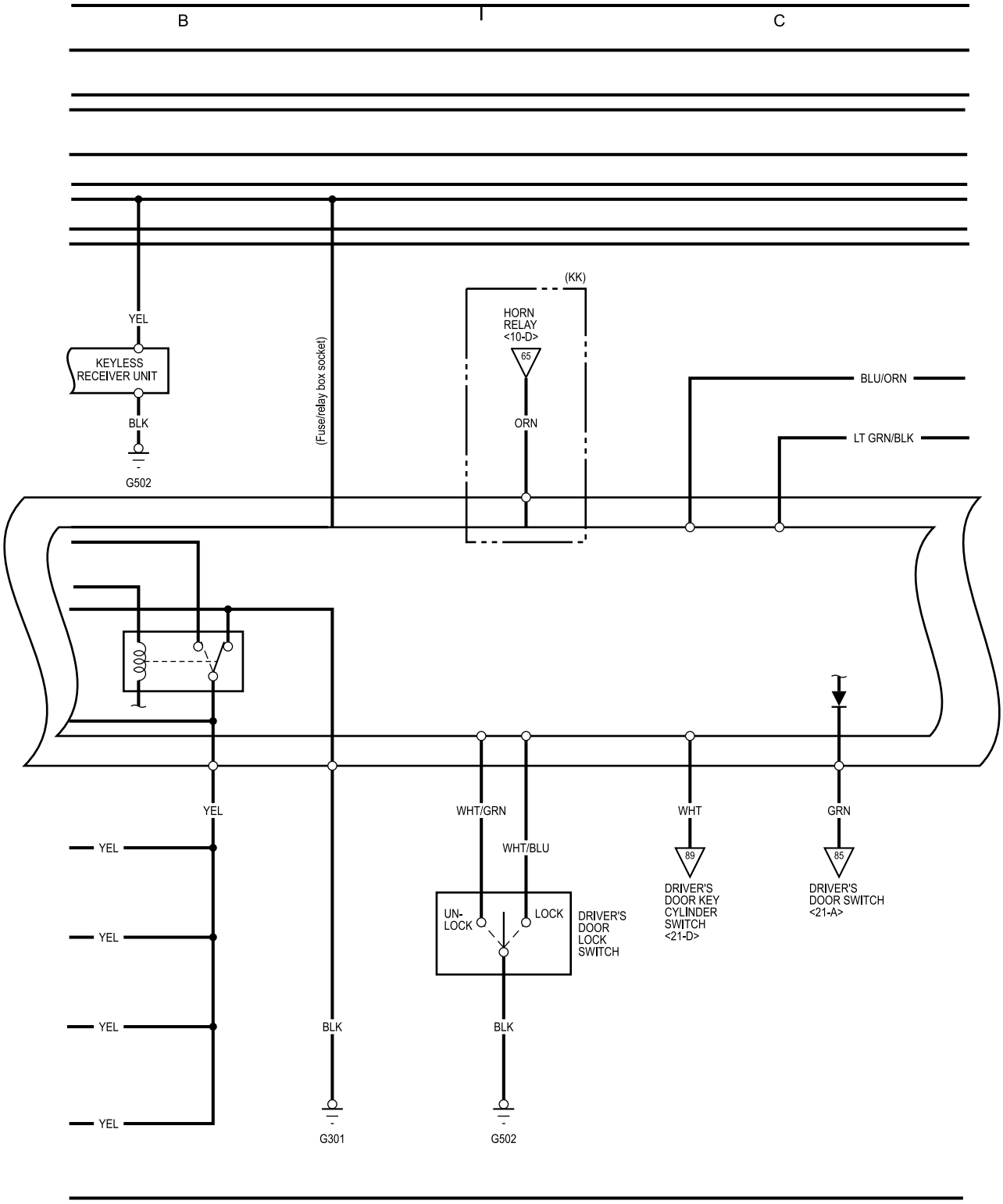

Keyless/Power Door Lock System (Without Super locking System) (cont'd)

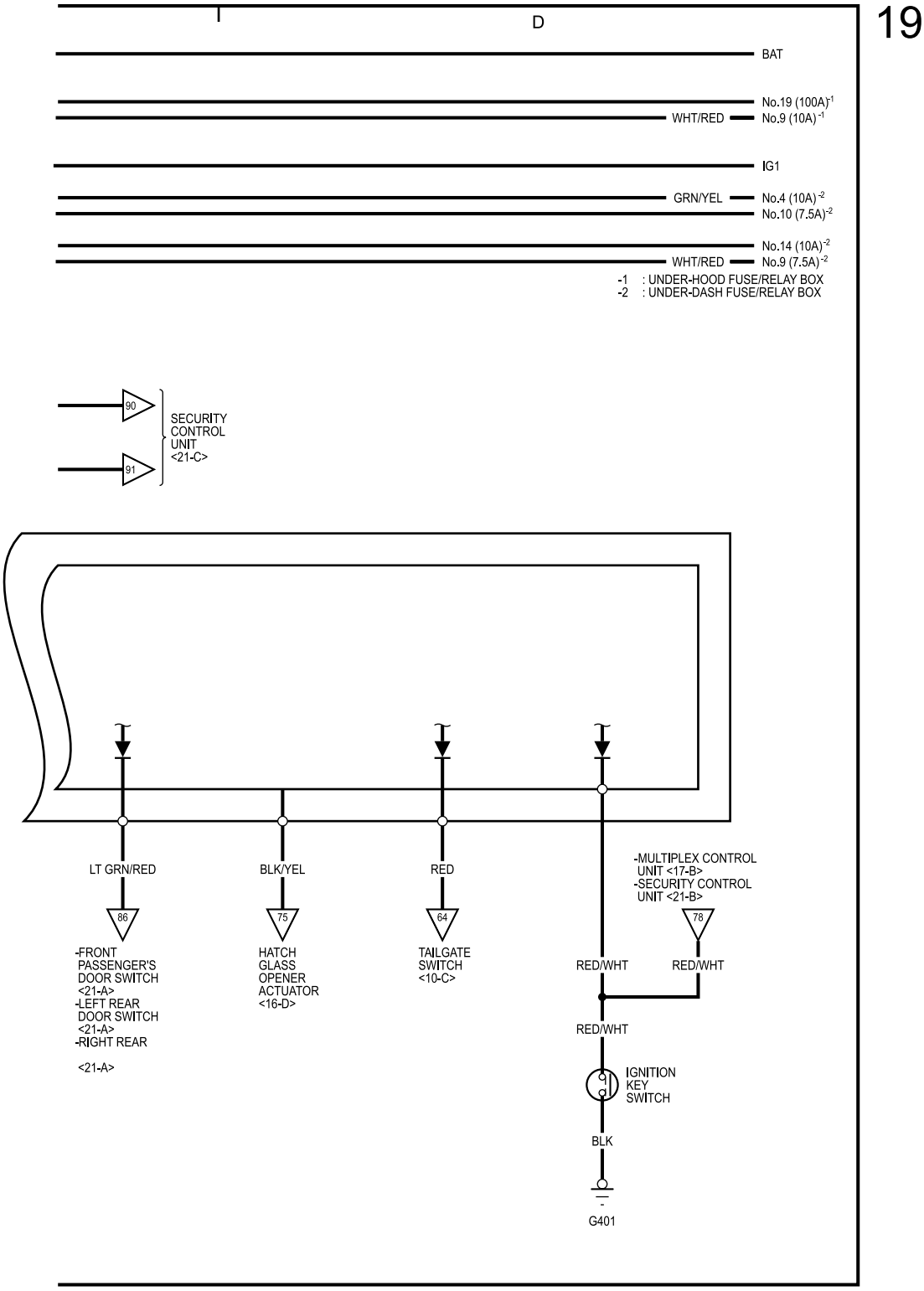

Security Alarm System (With Super Locking System)

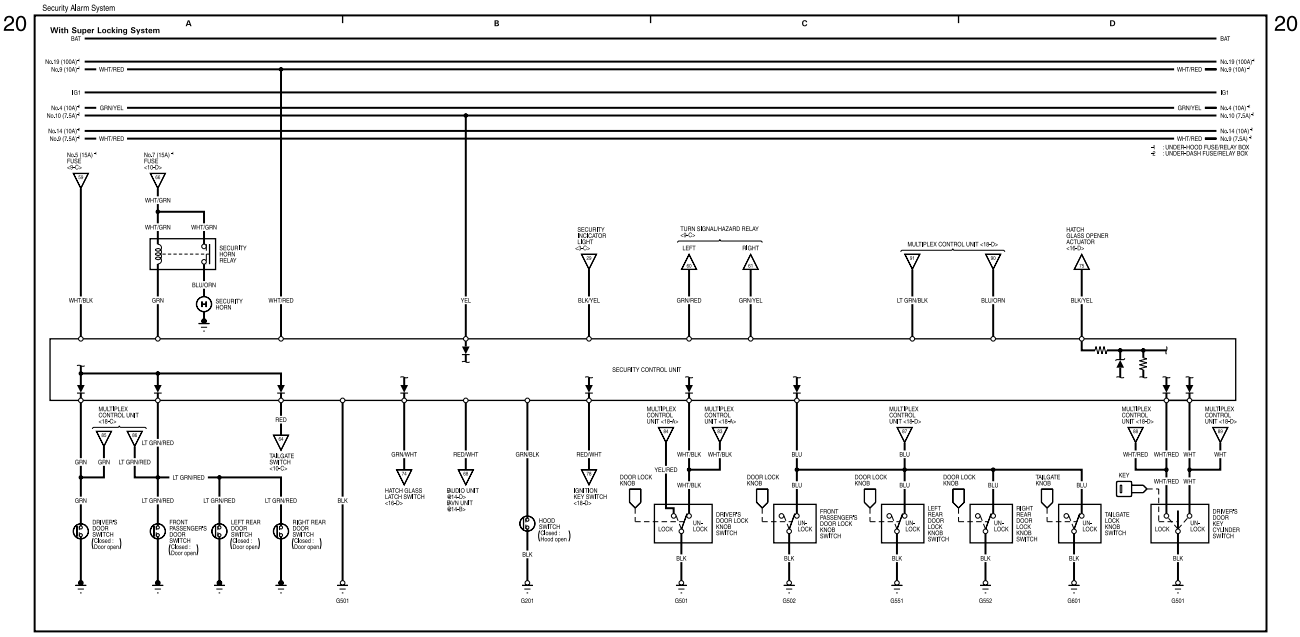

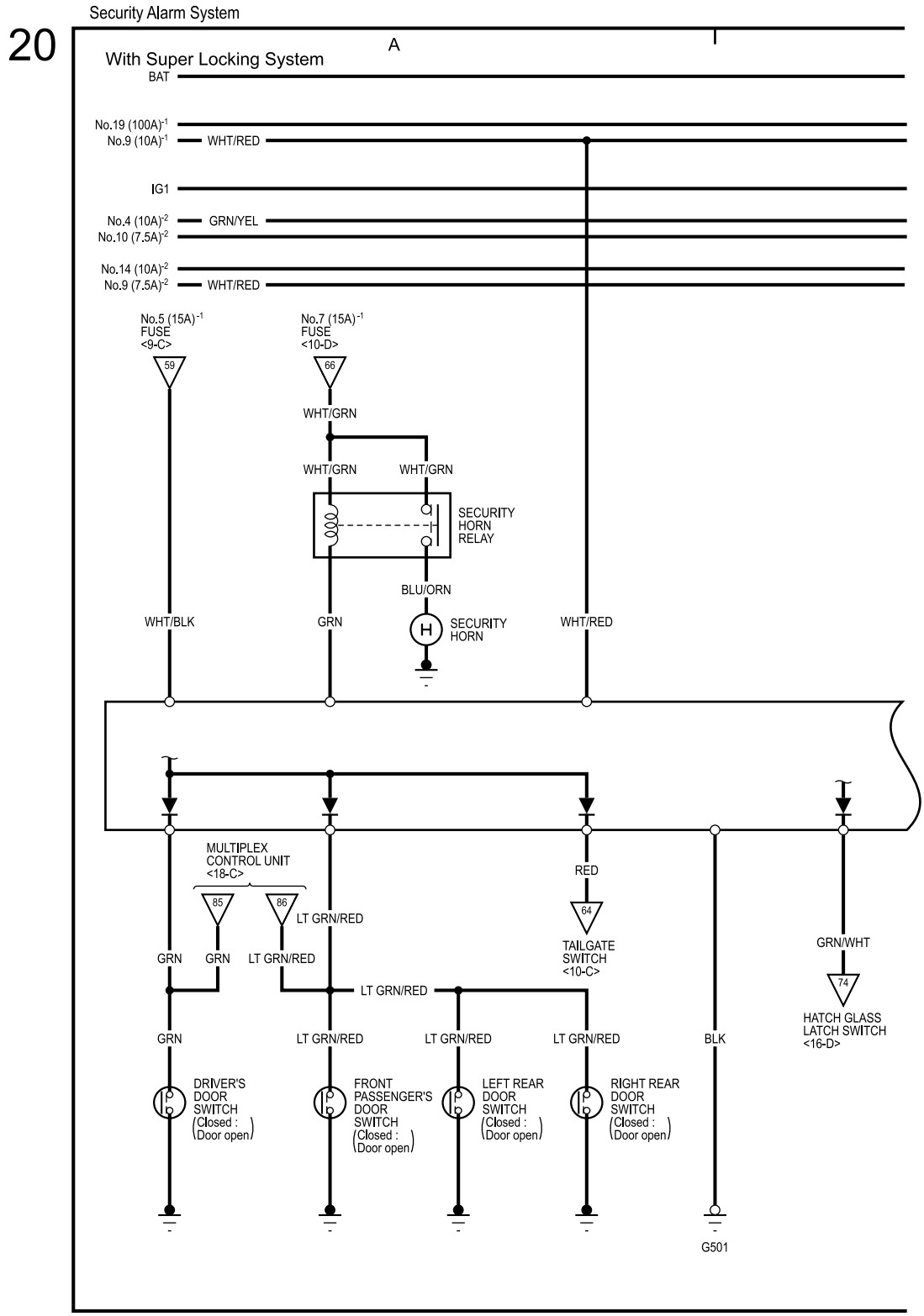
20
Security Alarm System
A
I
With Super Locking System
BAT
No.19 (100A)-1
No.9 (10A)-1
WHT/RED
IG1
No.4 (10A)-2
GRN/YEL
No.10 (7.5A)-2
No.14 (10A)-2
No.9 (7.5A)-2
WHT/RED
No.5 (15A)-1
FUSE
<9-C>
59
No.7 (15A)-1
FUSE
<10-D>
66
WHT/GRN
WHT/GRN
WHT/GRN
SECURITY
HORN
RELAY
BLU/ORN
WHT/BLK
GRN
SECURITY
HORN
WHT/RED
MULTIPLEX
CONTROL UNIT
<18-C>
85
86
LT GRN/RED
GRN
GRN
LT GRN/RED
RED
64
TAILGATE
SWITCH
<10-C>
GRN/WHT
74
HATCH GLASS
LATCH SWITCH
<16-D>
LT GRN/RED
GRN
LT GRN/RED
LT GRN/RED
LT GRN/RED
BLK
DRIVER'S
DOOR
SWITCH
(Closed :
Door open)
FRONT
PASSENGER'S
DOOR
SWITCH
(Closed :
Door open)
LEFT REAR
DOOR
SWITCH
(Closed :
Door open)
RIGHT REAR
DOOR
SWITCH
(Closed :
Door open)
G501

Security Alarm System (With Super Locking System) (cont'd)

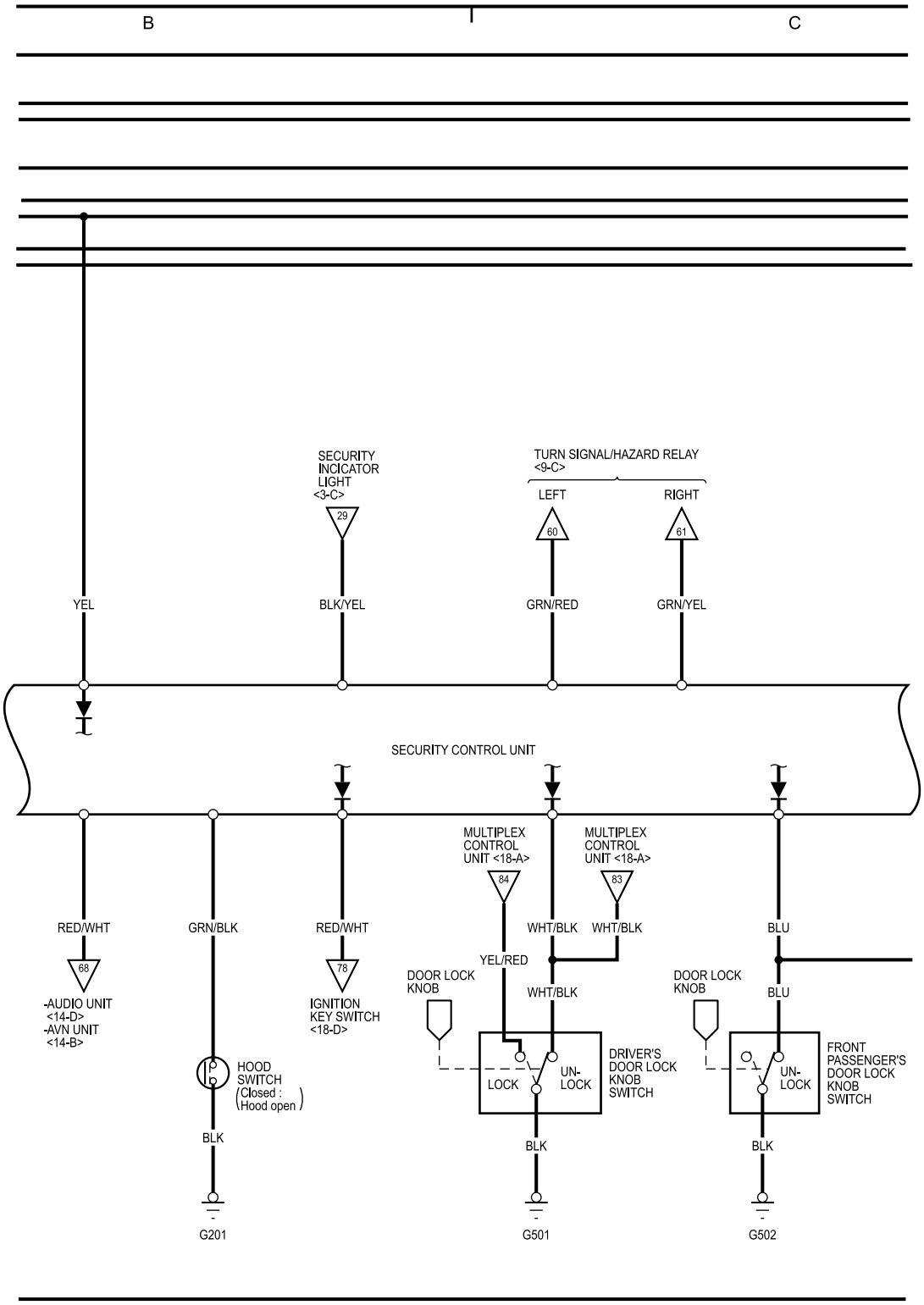

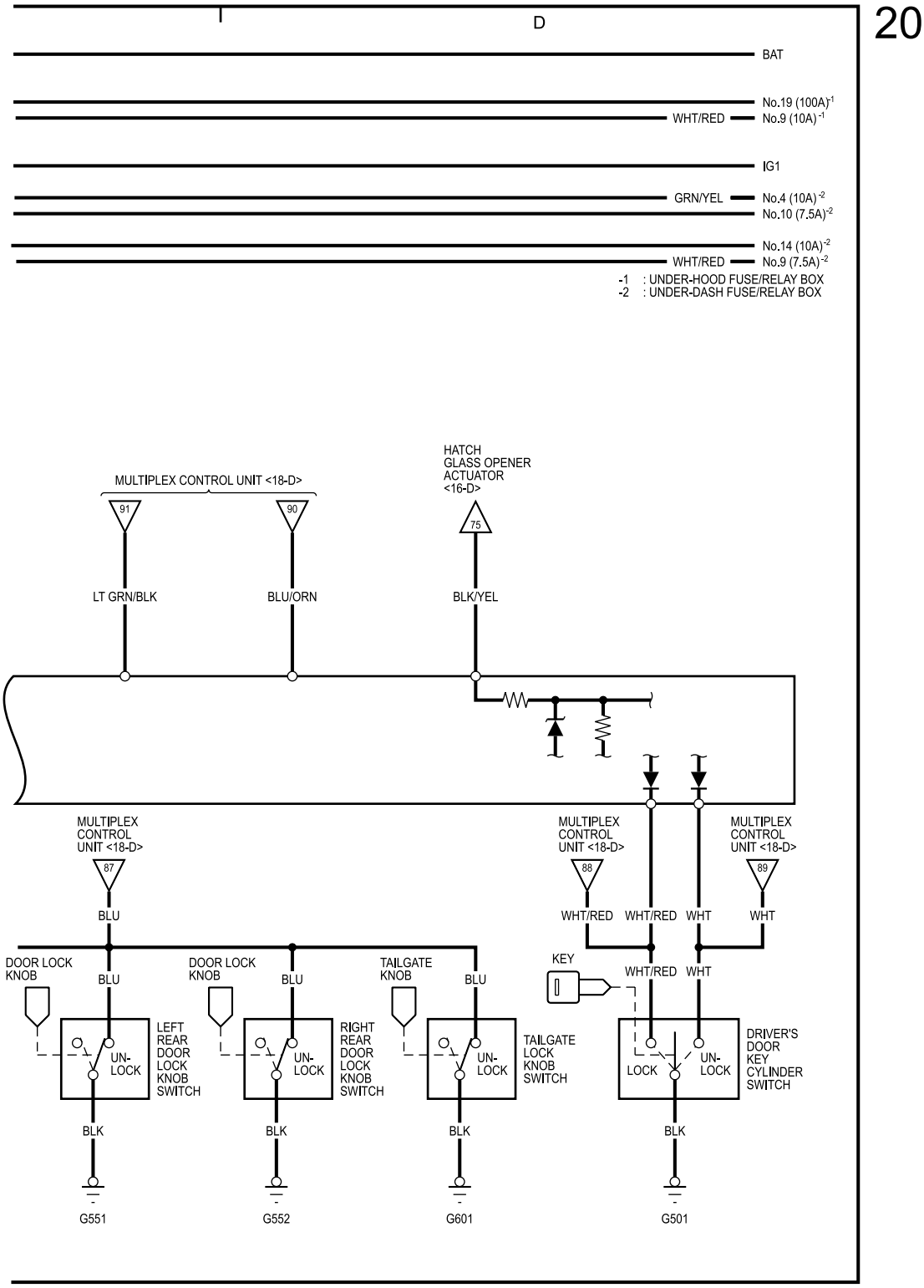
20
I
D
BAT
No.19 (100A)-1
WHT/RED
No.9 (10A) -1
IG1
GRN/YEL
No.4 (10A)-2
No.10 (7.5A)-2
No.14 (10A)-2
WHT/RED
No.9 (7.5A)-2
-1 : UNDER-HOOD FUSE/RELAY BOX
-2 : UNDER-DASH FUSE/RELAY BOX
MULTIPLEX CONTROL UNIT <18-D>
91
90
HATCH GLASS OPENER ACTUATOR <16-D>
75
LT GRN/BLK
BLU/ORN
BLK/YEL
MULTIPLEX CONTROL UNIT <18-D>
87
MULTIPLEX CONTROL UNIT <18-D>
88
MULTIPLEX CONTROL UNIT <18-D>
89
BLU
WHT/RED
WHT/RED
WHT
WHT
DOOR LOCK KNOB
BLU
DOOR LOCK KNOB
BLU
TAILGATE KNOB
BLU
KEY
WHT/RED
WHT
UN-LOCK
LEFT REAR DOOR LOCK KNOB SWITCH
UN-LOCK
RIGHT REAR DOOR LOCK KNOB SWITCH
UN-LOCK
TAILGATE LOCK KNOB SWITCH
LOCK
UN-LOCK
DRIVER'S DOOR KEY CYLINDER SWITCH
BLK
BLK
BLK
BLK
G551
G552
G601
G501

Security Alarm System (Without Super Locking System)

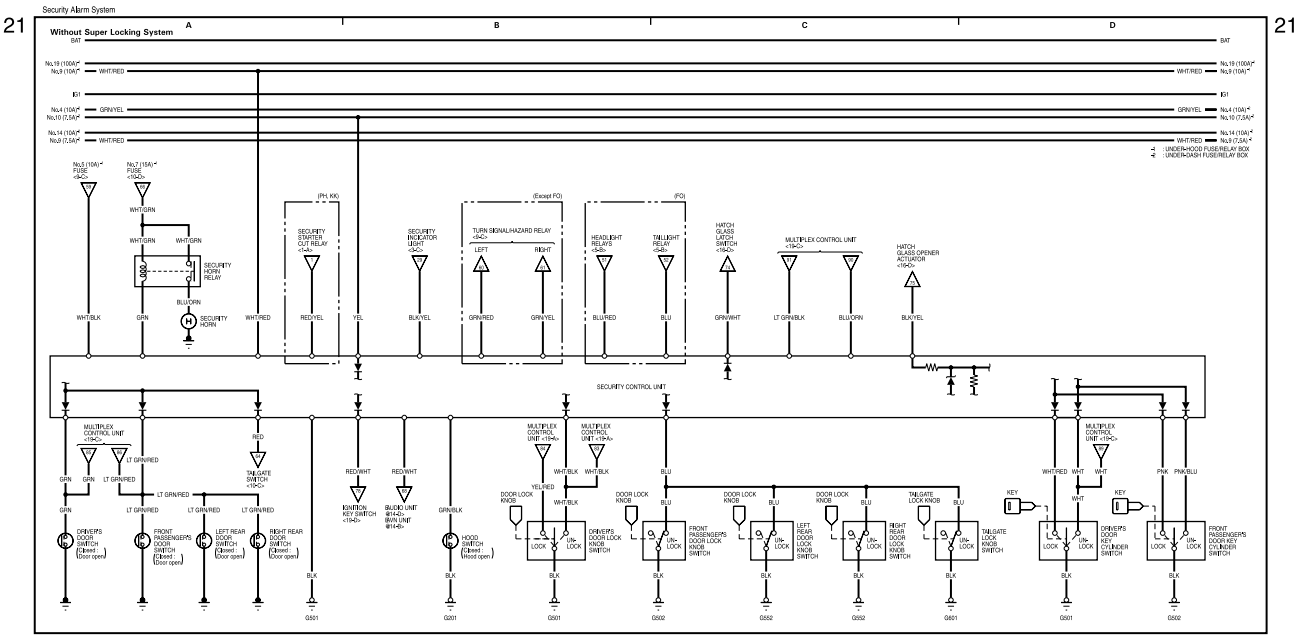

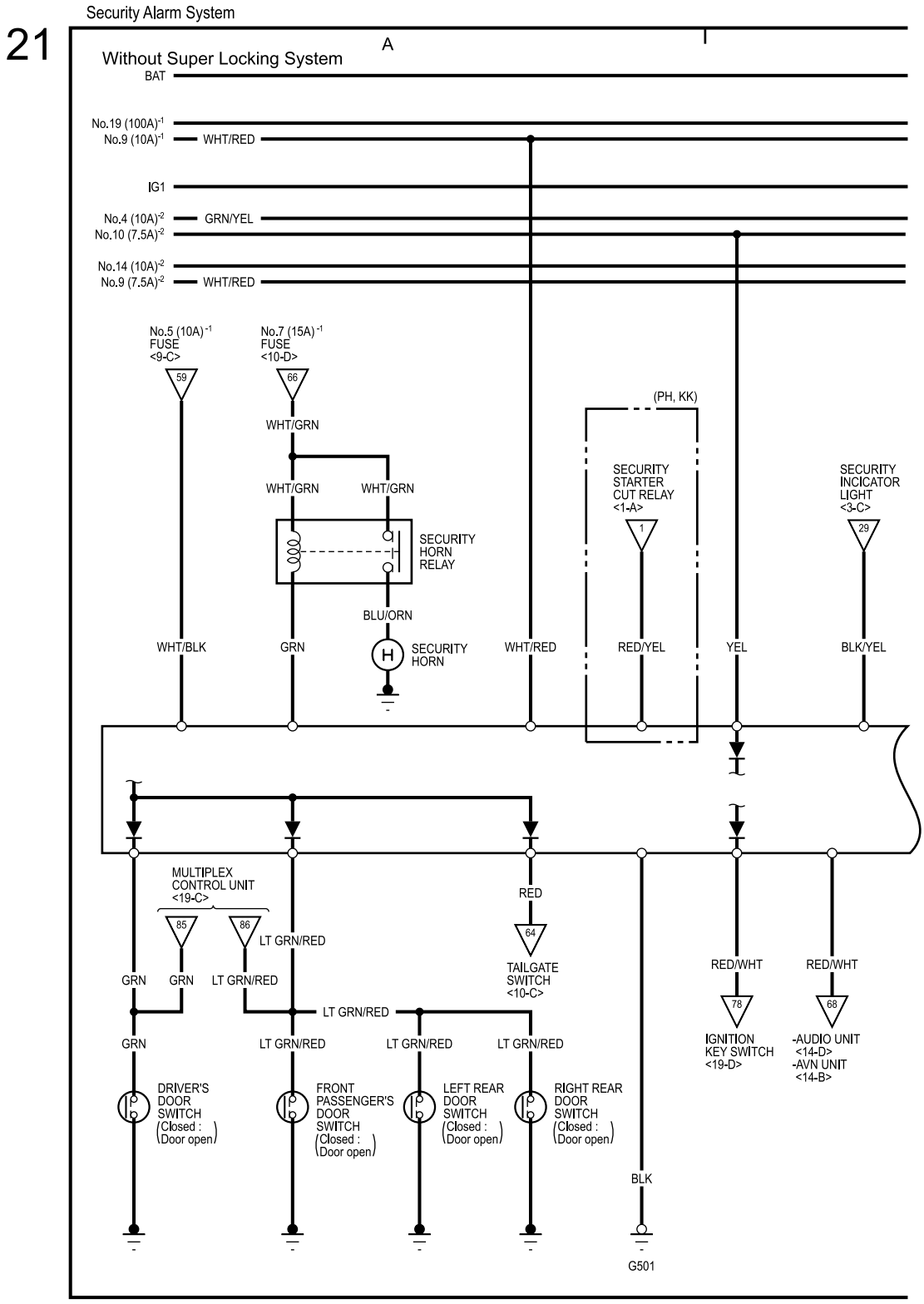
Security Alarm System
21
Without Super Locking System
A
BAT
No.19 (100A)-1
No.9 (10A)-1
WHT/RED
IG1
No.4 (10A)-2
GRN/YEL
No.10 (7.5A)-2
No.14 (10A)-2
No.9 (7.5A)-2
WHT/RED
No.5 (10A)-1 FUSE <9-C>
No.7 (15A)-1 FUSE <10-D>
59
66
WHT/GRN
WHT/GRN
WHT/GRN
SECURITY HORN RELAY
BLU/ORN
SECURITY HORN
(PH, KK)
SECURITY STARTER CUT RELAY <1-A>
1
SECURITY INCICATOR LIGHT <3-C>
29
WHT/BLK
GRN
WHT/RED
RED/YEL
YEL
BLK/YEL
MULTIPLEX CONTROL UNIT <19-C>
85
86
LT GRN/RED
GRN
GRN
LT GRN/RED
RED
64
TAILGATE SWITCH <10-C>
RED/WHT
RED/WHT
78
68
IGNITION KEY SWITCH <19-D>
-AUDIO UNIT <14-D>
-AVN UNIT <14-B>
LT GRN/RED
GRN
LT GRN/RED
LT GRN/RED
LT GRN/RED
DRIVER'S DOOR SWITCH (Closed : Door open)
FRONT PASSENGER'S DOOR SWITCH (Closed : Door open)
LEFT REAR DOOR SWITCH (Closed : Door open)
RIGHT REAR DOOR SWITCH (Closed : Door open)
BLK
G501

Security Alarm System (Without Super Locking System) (cont'd)

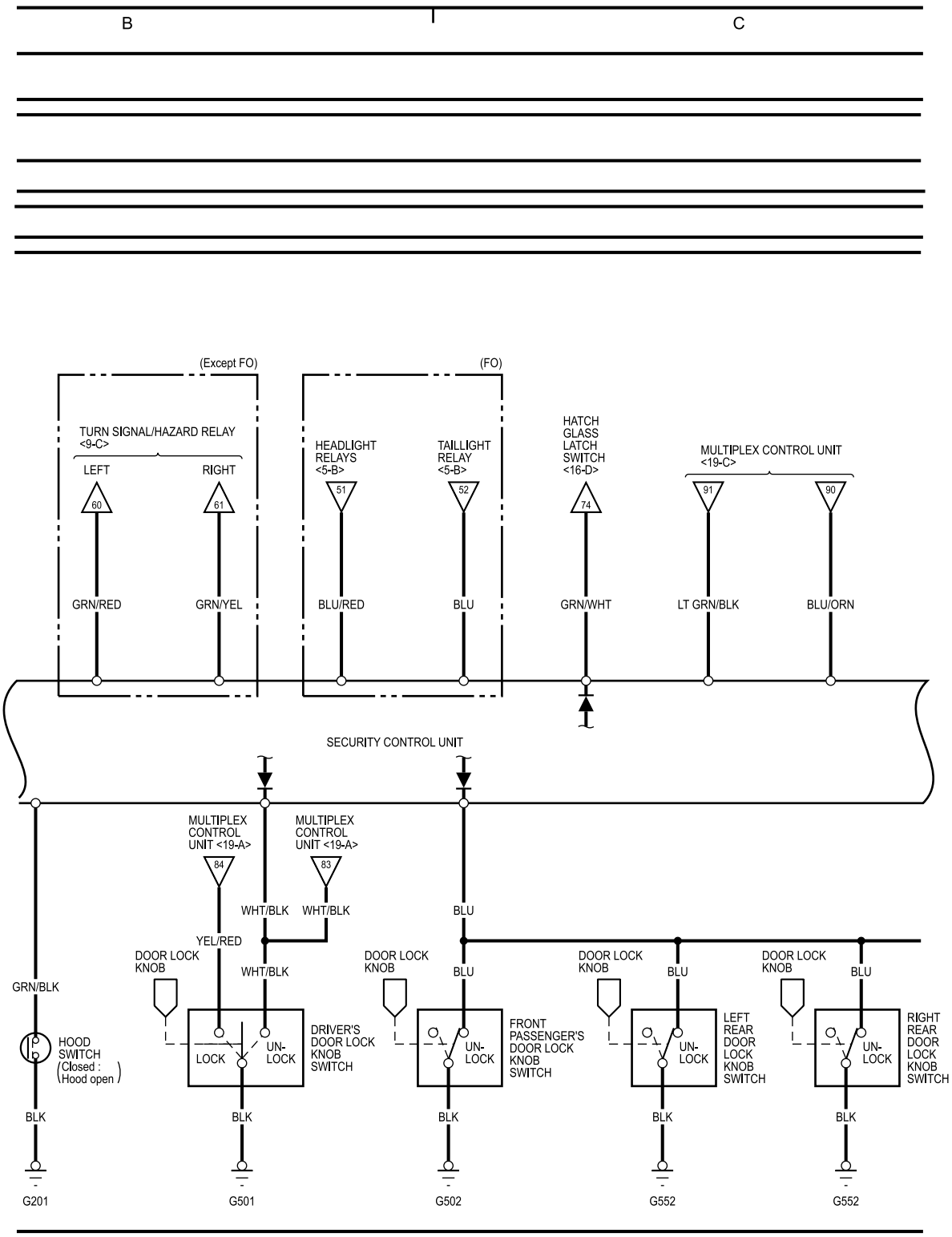

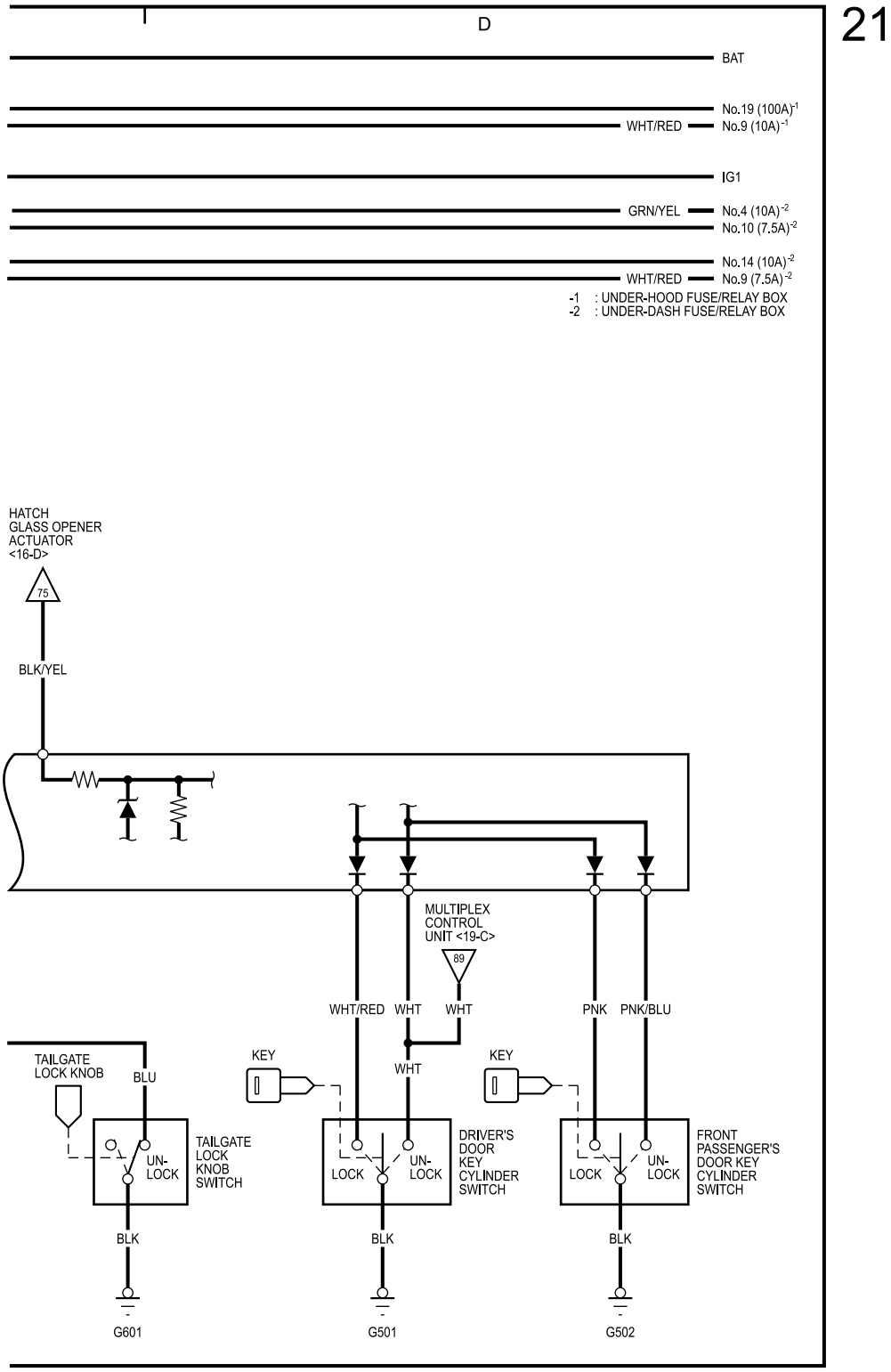
21
D
BAT
No.19 (100A)-1
WHT/RED
No.9 (10A)-1
IG1
GRN/YEL
No.4 (10A)-2
No.10 (7.5A)-2
No.14 (10A)-2
WHT/RED
No.9 (7.5A)-2
-1 : UNDER-HOOD FUSE/RELAY BOX
-2 : UNDER-DASH FUSE/RELAY BOX
HATCH GLASS OPENER ACTUATOR <16-D>
75
BLK/YEL
MULTIPLEX CONTROL UNIT <19-C>
89
WHT/RED
WHT
WHT
PNK
PNK/BLU
WHT
TAILGATE LOCK KNOB
BLU
KEY
KEY
UN-LOCK
TAILGATE LOCK KNOB SWITCH
LOCK
UN-LOCK
DRIVER'S DOOR KEY CYLINDER SWITCH
LOCK
UN-LOCK
FRONT PASSENGER'S DOOR KEY CYLINDER SWITCH
BLK
BLK
BLK
G601
G501
G502

Interlock System, ABS

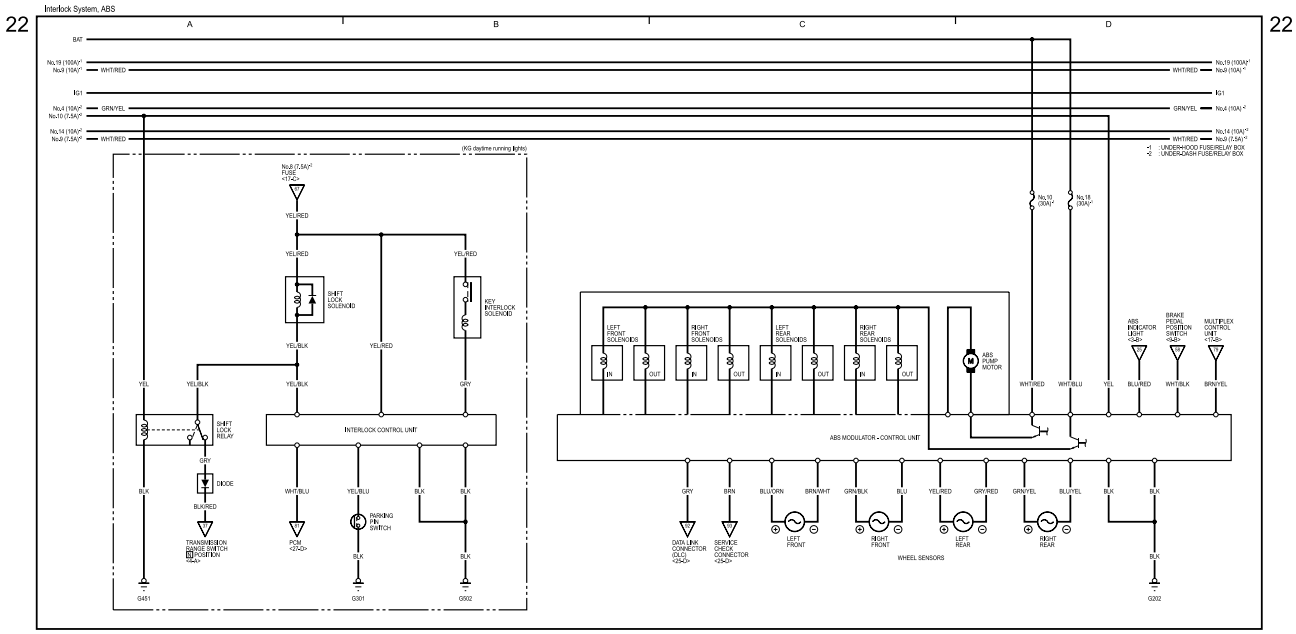

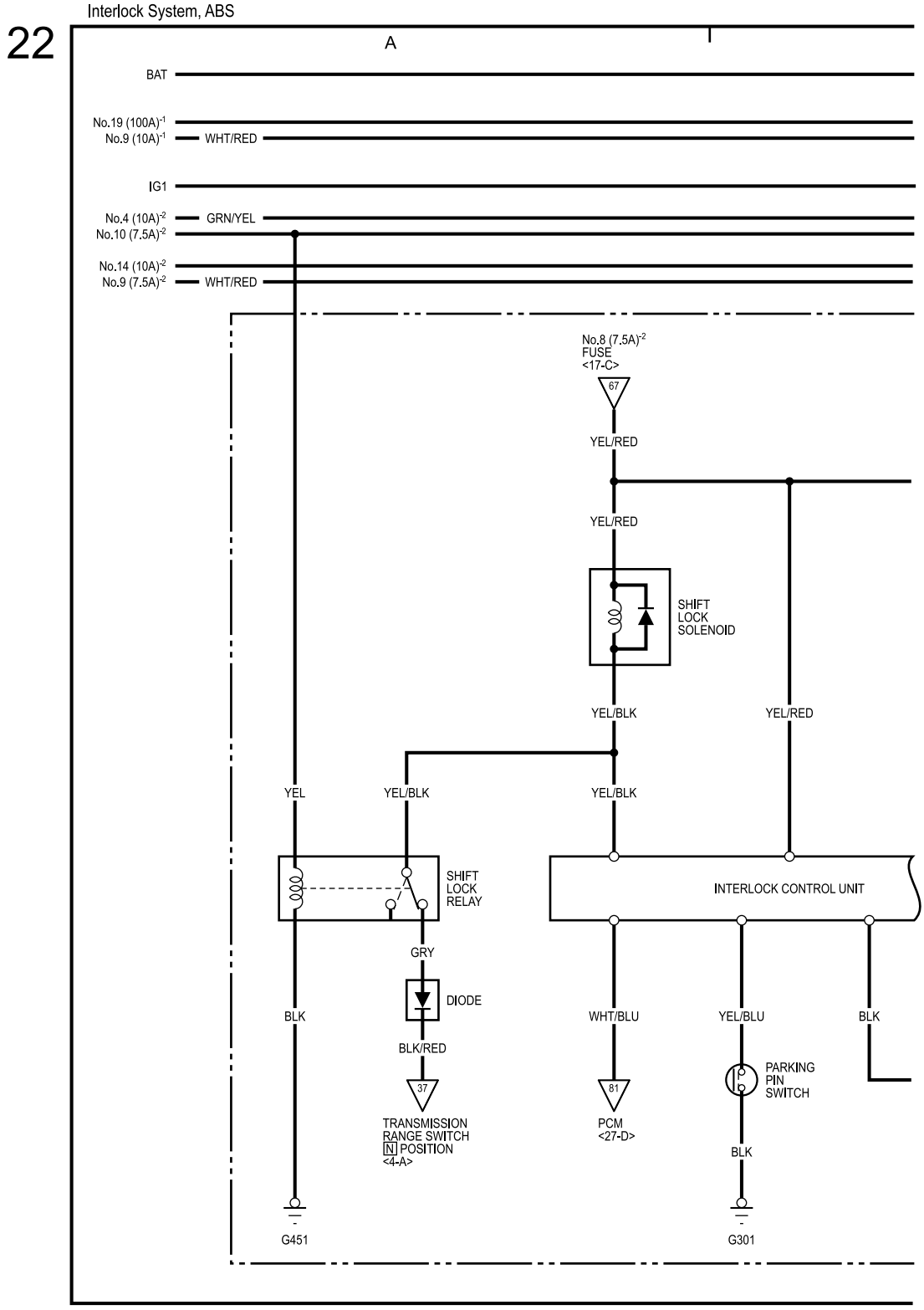
Interlock System, ABS
22
A
BAT
No.19 (100A)-1
No.9 (10A)-1
WHT/RED
IG1
No.4 (10A)-2
GRN/YEL
No.10 (7.5A)-2
No.14 (10A)-2
No.9 (7.5A)-2
WHT/RED
No.8 (7.5A)-2
FUSE
<17-C>
67
YEL/RED
YEL/RED
SHIFT
LOCK
SOLENOID
YEL/BLK
YEL/RED
YEL
YEL/BLK
YEL/BLK
SHIFT
LOCK
RELAY
INTERLOCK CONTROL UNIT
GRY
DIODE
BLK
BLK/RED
37
TRANSMISSION
RANGE SWITCH
N POSITION
<4-A>
WHT/BLU
81
PCM
<27-D>
YEL/BLU
PARKING
PIN
SWITCH
BLK
BLK
G451
G301

Interlock System, ABS (cont'd)

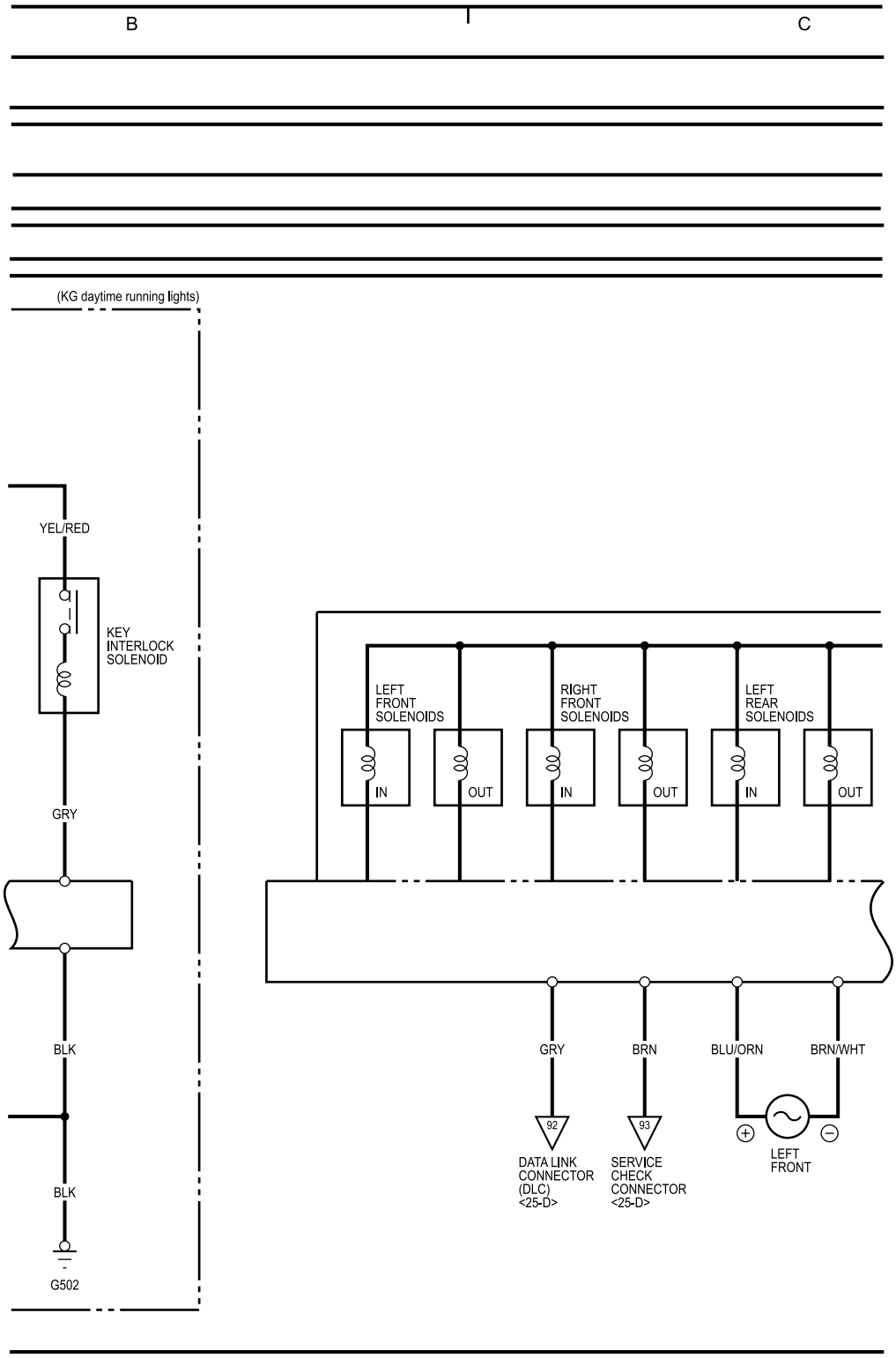

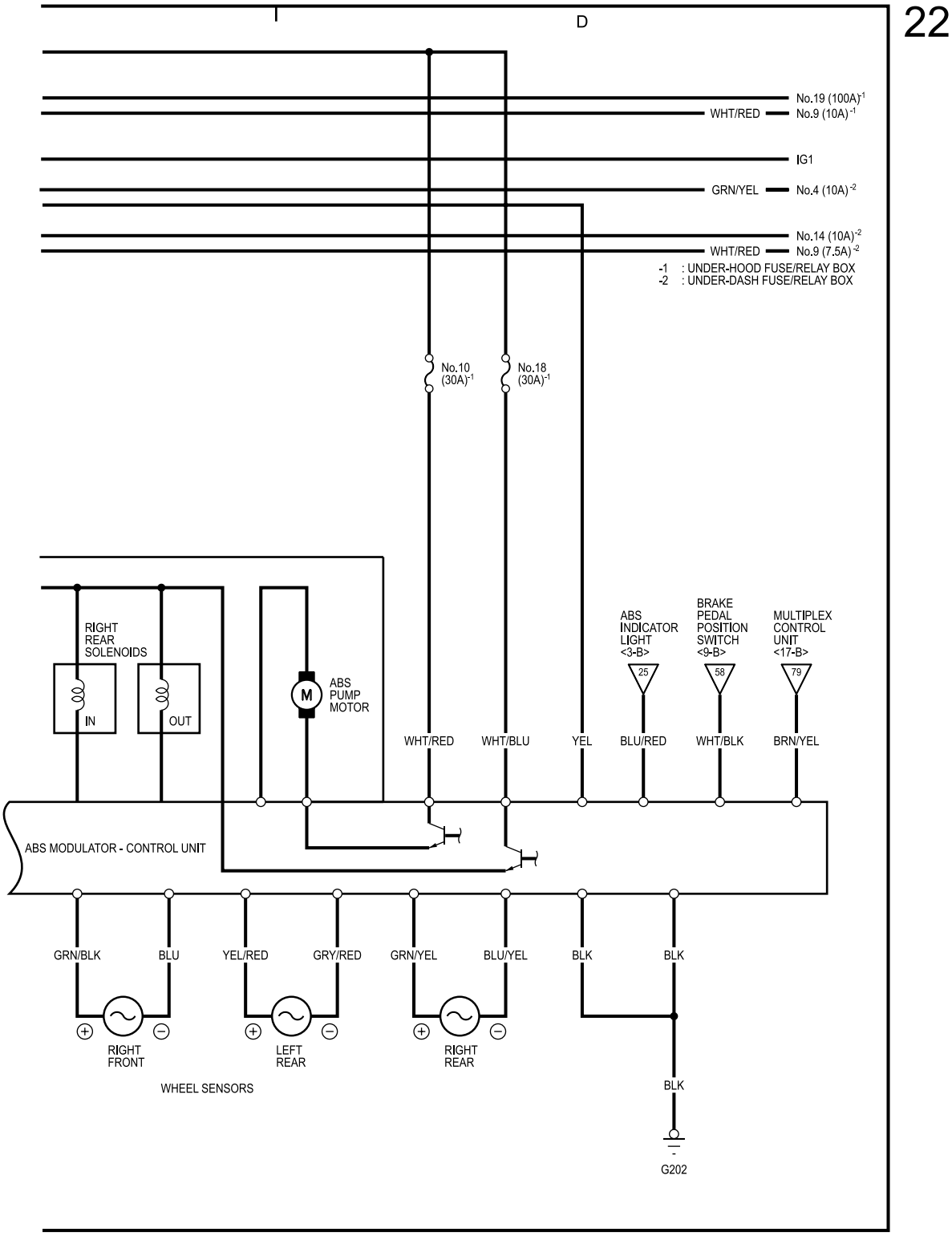
22
I
D
No.19 (100A)-1
WHT/RED
No.9 (10A)-1
IG1
GRN/YEL
No.4 (10A)-2
No.14 (10A)-2
WHT/RED
No.9 (7.5A)-2
-1 : UNDER-HOOD FUSE/RELAY BOX
-2 : UNDER-DASH FUSE/RELAY BOX
No.10 (30A)-1
No.18 (30A)-1
RIGHT REAR SOLENOIDS
IN
OUT
M
ABS PUMP MOTOR
ABS INDICATOR LIGHT <3-B>
25
BRAKE PEDAL POSITION SWITCH <9-B>
58
MULTIPLEX CONTROL UNIT <17-B>
79
WHT/RED
WHT/BLU
YEL
BLU/RED
WHT/BLK
BRN/YEL
ABS MODULATOR - CONTROL UNIT
GRN/BLK
BLU
YEL/RED
GRY/RED
GRN/YEL
BLU/YEL
BLK
BLK
RIGHT FRONT
LEFT REAR
RIGHT REAR
WHEEL SENSORS
BLK
G202

SRS

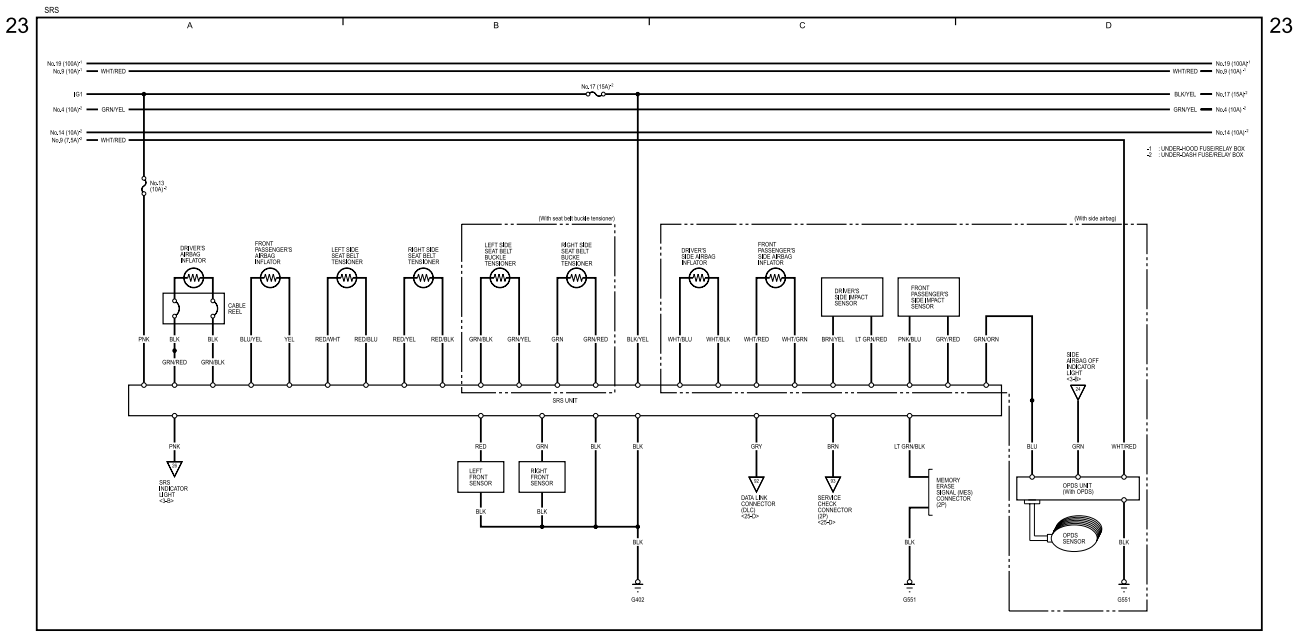
SRS
23
23
A
B
C
D
No.19 (100A)
No.9 (10A)
WHT/RED
IG1
No.17 (15A)
BLK/YEL
No.4 (10A)
GRN/YEL
No.14 (10A)
No.9 (7.5A)
No.13 (10A)
UNDER-HOOD FUSE/RELAY BOX
UNDER-DASH FUSE/RELAY BOX
(With seat belt buckle tensioner)
(With side airbag)
DRIVER'S AIRBAG INFLATOR
FRONT PASSENGER'S AIRBAG INFLATOR
LEFT SIDE SEAT BELT TENSIONER
RIGHT SIDE SEAT BELT TENSIONER
LEFT SIDE SEAT BELT BUCKLE TENSIONER
RIGHT SIDE SEAT BELT BUCKLE TENSIONER
DRIVER'S SIDE AIRBAG INFLATOR
FRONT PASSENGER'S SIDE AIRBAG INFLATOR
DRIVER'S SIDE IMPACT SENSOR
FRONT PASSENGER'S SIDE IMPACT SENSOR
CABLE REEL
PNK
BLK
BLU/YEL
YEL
RED/WHT
RED/BLU
RED/YEL
RED/BLK
GRN/BLK
GRN/YEL
GRN
GRN/RED
WHT/BLU
WHT/BLK
WHT/RED
WHT/GRN
BRN/YEL
LT GRN/RED
PNK/BLU
GRY/RED
GRN/ORN
GRN/RED
GRN/BLK
SIDE AIRBAG OFF INDICATOR LIGHT <3A>
SRS UNIT
PNK
SRS INDICATOR LIGHT <3A>
RED
GRN
BLK
GRY
BRN
LT GRN/BLK
BLU
WHT/RED
LEFT FRONT SENSOR
RIGHT FRONT SENSOR
DATA LINK CONNECTOR (DLC) <2>
SERVICE CHECK CONNECTOR (2P) <2>
MEMORY ERASE SIGNAL (MES) CONNECTOR (2P)
OPDS UNIT (With OPDS)
OPDS SENSOR
G402
G551
G551

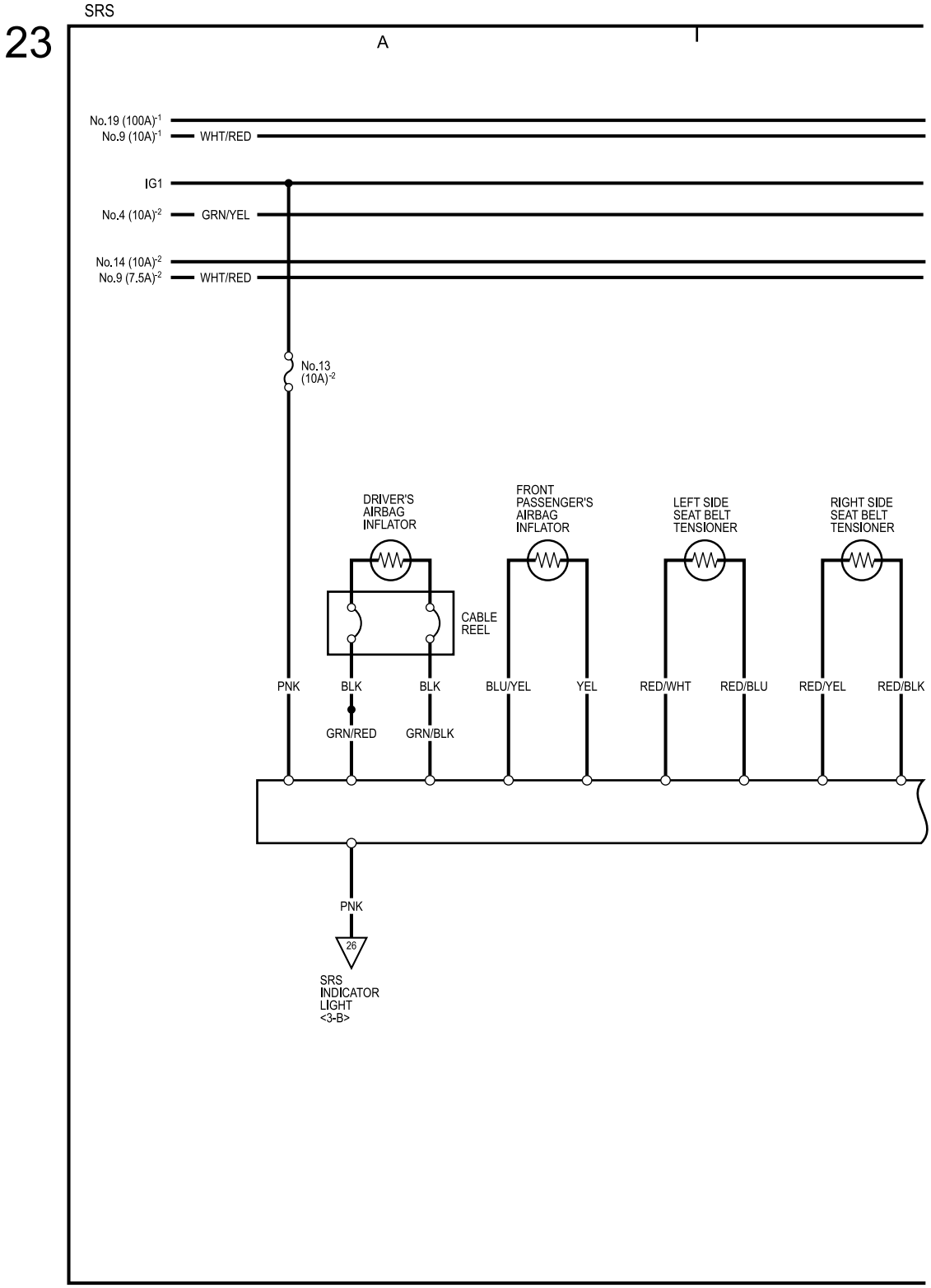
SRS
23
A
No.19 (100A)-1
No.9 (10A)-1
WHT/RED
IG1
No.4 (10A)-2
GRN/YEL
No.14 (10A)-2
No.9 (7.5A)-2
WHT/RED
No.13
(10A)-2
DRIVER'S
AIRBAG
INFLATOR
FRONT
PASSENGER'S
AIRBAG
INFLATOR
LEFT SIDE
SEAT BELT
TENSIONER
RIGHT SIDE
SEAT BELT
TENSIONER
CABLE
REEL
PNK
BLK
BLK
BLU/YEL
YEL
RED/WHT
RED/BLU
RED/YEL
RED/BLK
GRN/RED
GRN/BLK
PNK
26
SRS
INDICATOR
LIGHT
<3-B>

SRS (cont'd)

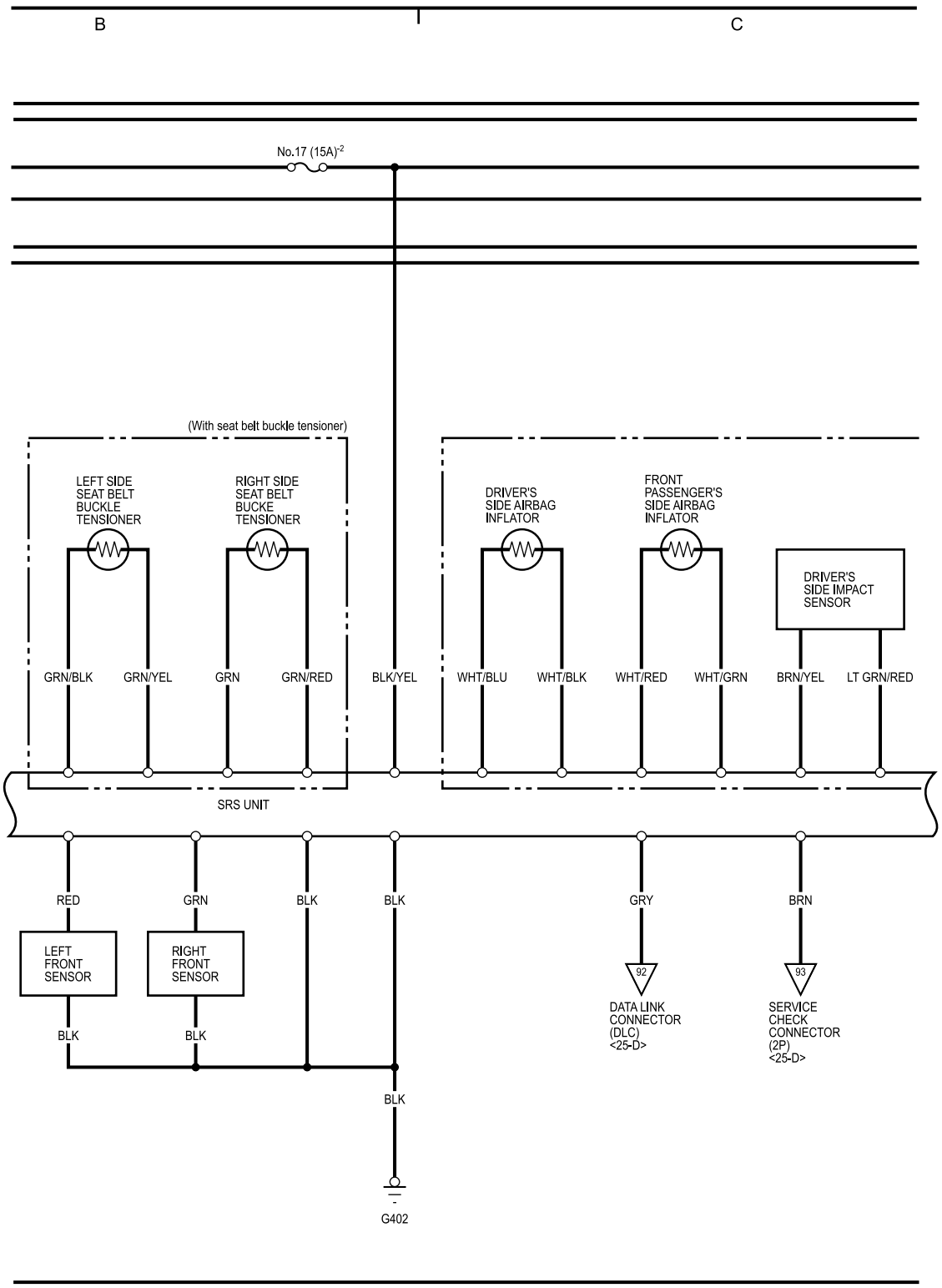
B
C
No.17 (15A)-2
(With seat belt buckle tensioner)
LEFT SIDE SEAT BELT BUCKLE TENSIONER
RIGHT SIDE SEAT BELT BUCKE TENSIONER
DRIVER'S SIDE AIRBAG INFLATOR
FRONT PASSENGER'S SIDE AIRBAG INFLATOR
DRIVER'S SIDE IMPACT SENSOR
GRN/BLK
GRN/YEL
GRN
GRN/RED
BLK/YEL
WHT/BLU
WHT/BLK
WHT/RED
WHT/GRN
BRN/YEL
LT GRN/RED
SRS UNIT
RED
GRN
BLK
BLK
GRY
BRN
LEFT FRONT SENSOR
RIGHT FRONT SENSOR
92
93
DATA LINK CONNECTOR (DLC) <25-D>
SERVICE CHECK CONNECTOR (2P) <25-D>
BLK
BLK
BLK
G402

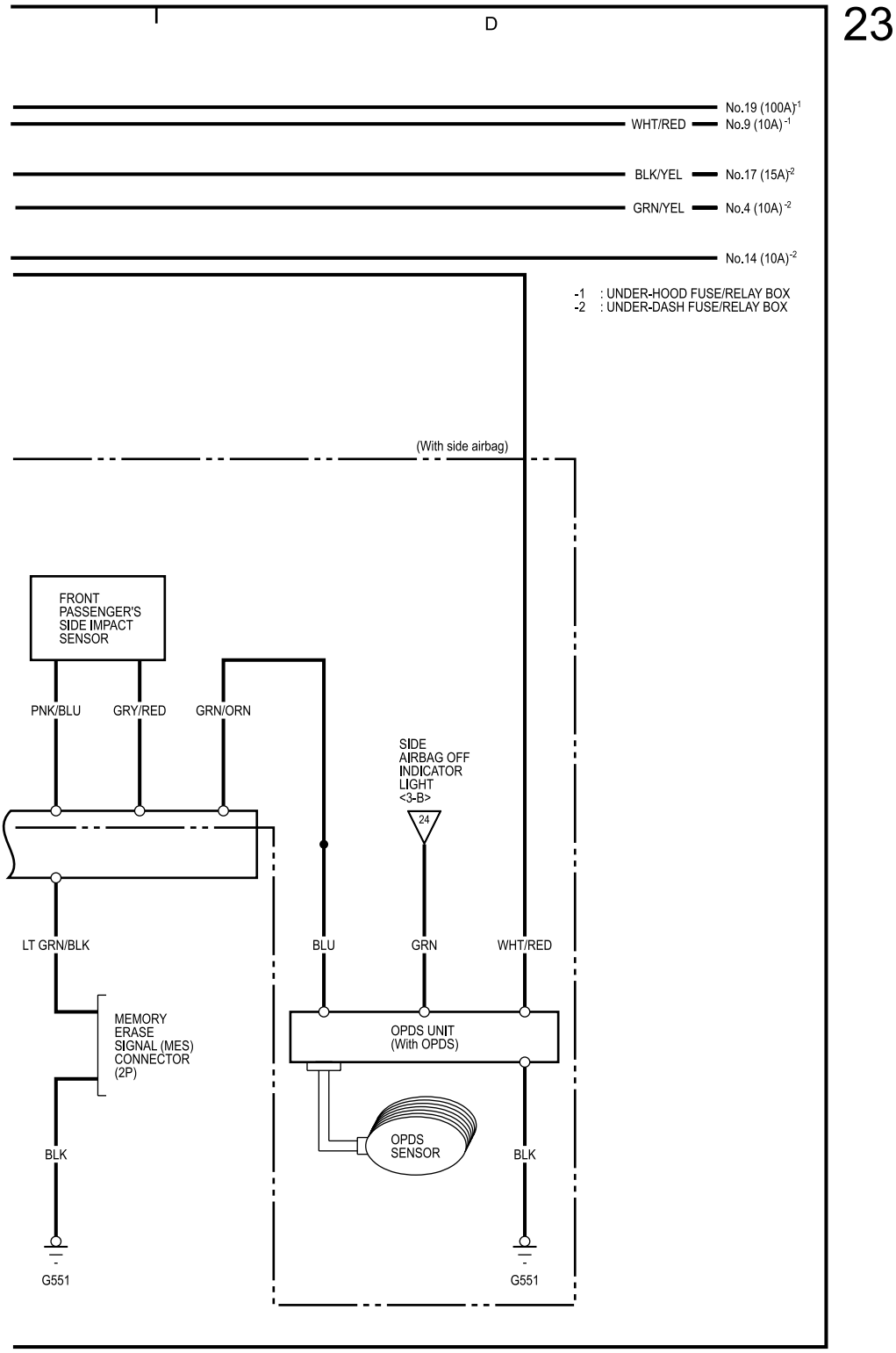
23
D
No.19 (100A)-1
WHT/RED
No.9 (10A) -1
BLK/YEL
No.17 (15A)-2
GRN/YEL
No.4 (10A) -2
No.14 (10A)-2
-1 : UNDER-HOOD FUSE/RELAY BOX
-2 : UNDER-DASH FUSE/RELAY BOX
(With side airbag)
FRONT PASSENGER'S SIDE IMPACT SENSOR
PNK/BLU
GRY/RED
GRN/ORN
SIDE AIRBAG OFF INDICATOR LIGHT <3-B>
24
LT GRN/BLK
BLU
GRN
WHT/RED
MEMORY ERASE SIGNAL (MES) CONNECTOR (2P)
OPDS UNIT (With OPDS)
OPDS SENSOR
BLK
BLK
G551
G551

Fan Controls, HVAC

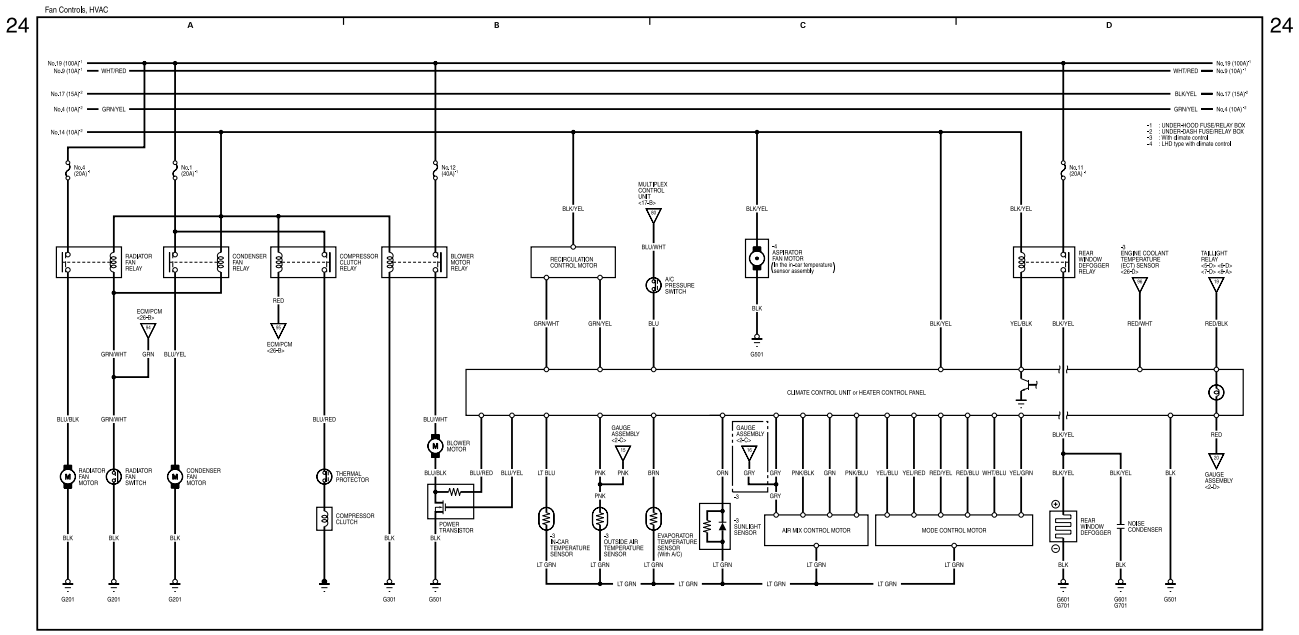

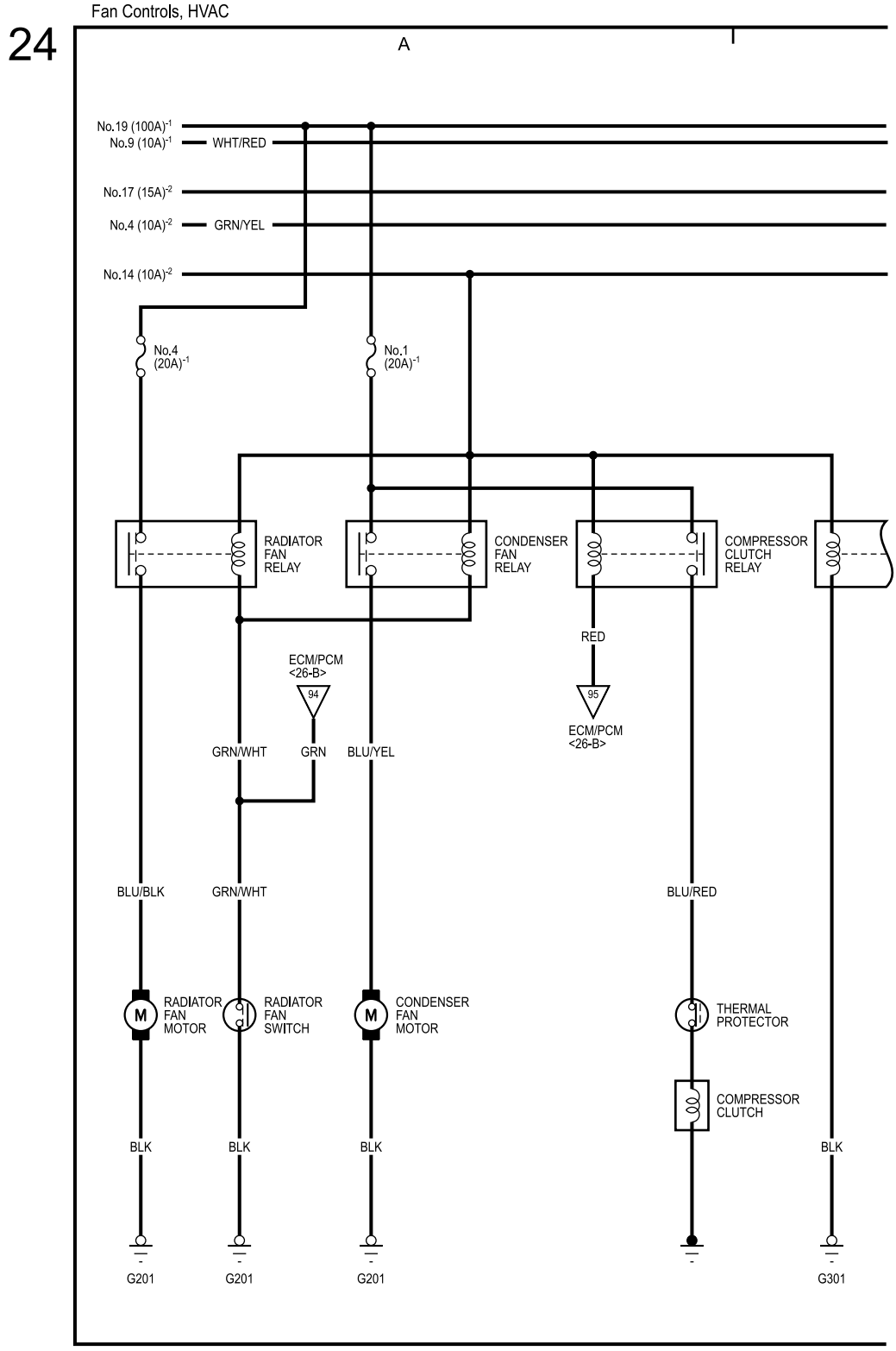
Fan Controls, HVAC
24
A
No.19 (100A)-1
No.9 (10A)-1
WHT/RED
No.17 (15A)-2
No.4 (10A)-2
GRN/YEL
No.14 (10A)-2
No.4 (20A)-1
No.1 (20A)-1
RADIATOR FAN RELAY
CONDENSER FAN RELAY
COMPRESSOR CLUTCH RELAY
RED
ECM/PCM <26-B>
94
95
ECM/PCM <26-B>
GRN/WHT
GRN
BLU/YEL
BLU/BLK
GRN/WHT
BLU/RED
RADIATOR FAN MOTOR
RADIATOR FAN SWITCH
CONDENSER FAN MOTOR
THERMAL PROTECTOR
COMPRESSOR CLUTCH
BLK
BLK
BLK
BLK
G201
G201
G201
G301

Fan Controls, HVAC (cont'd)

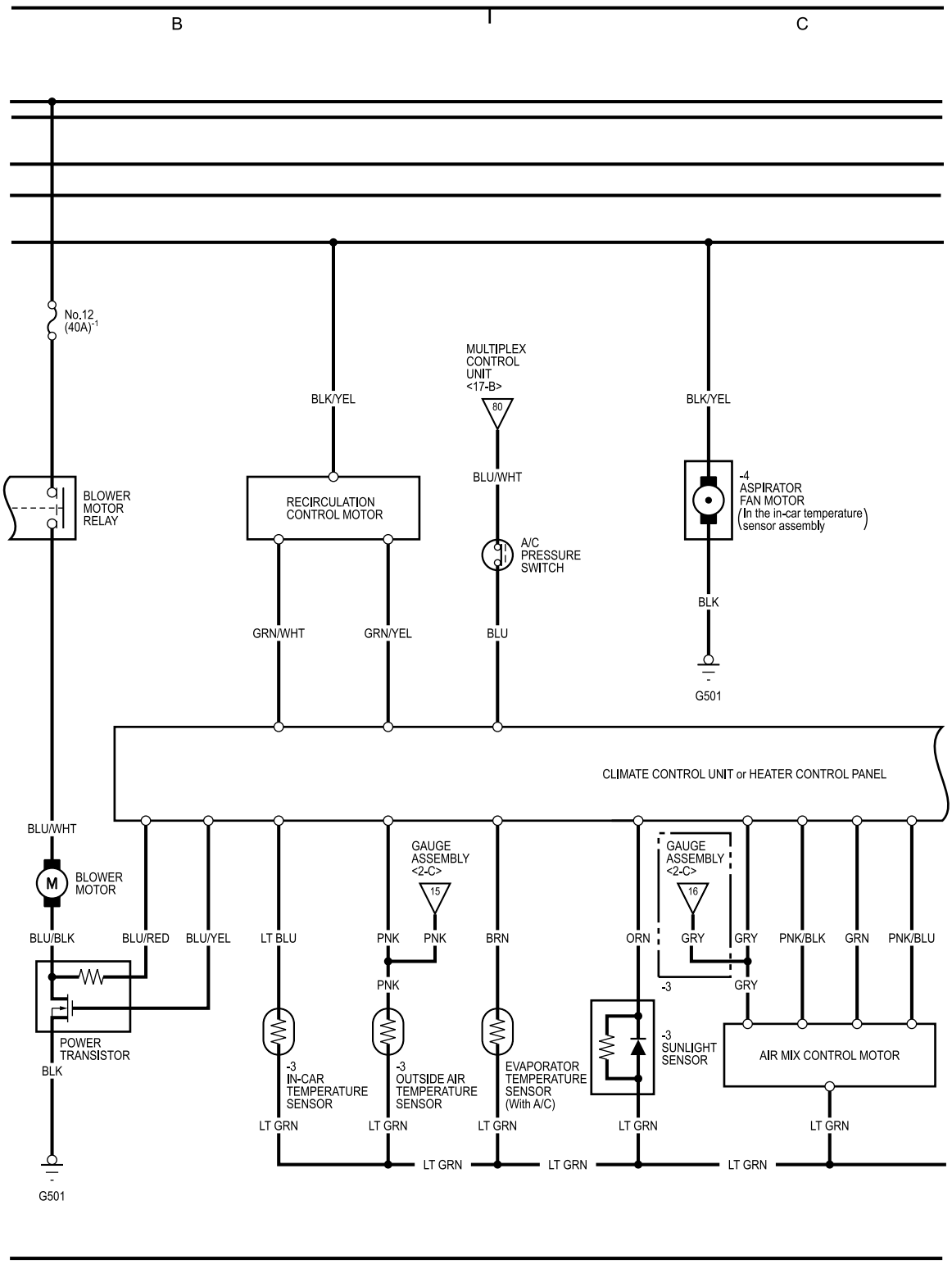

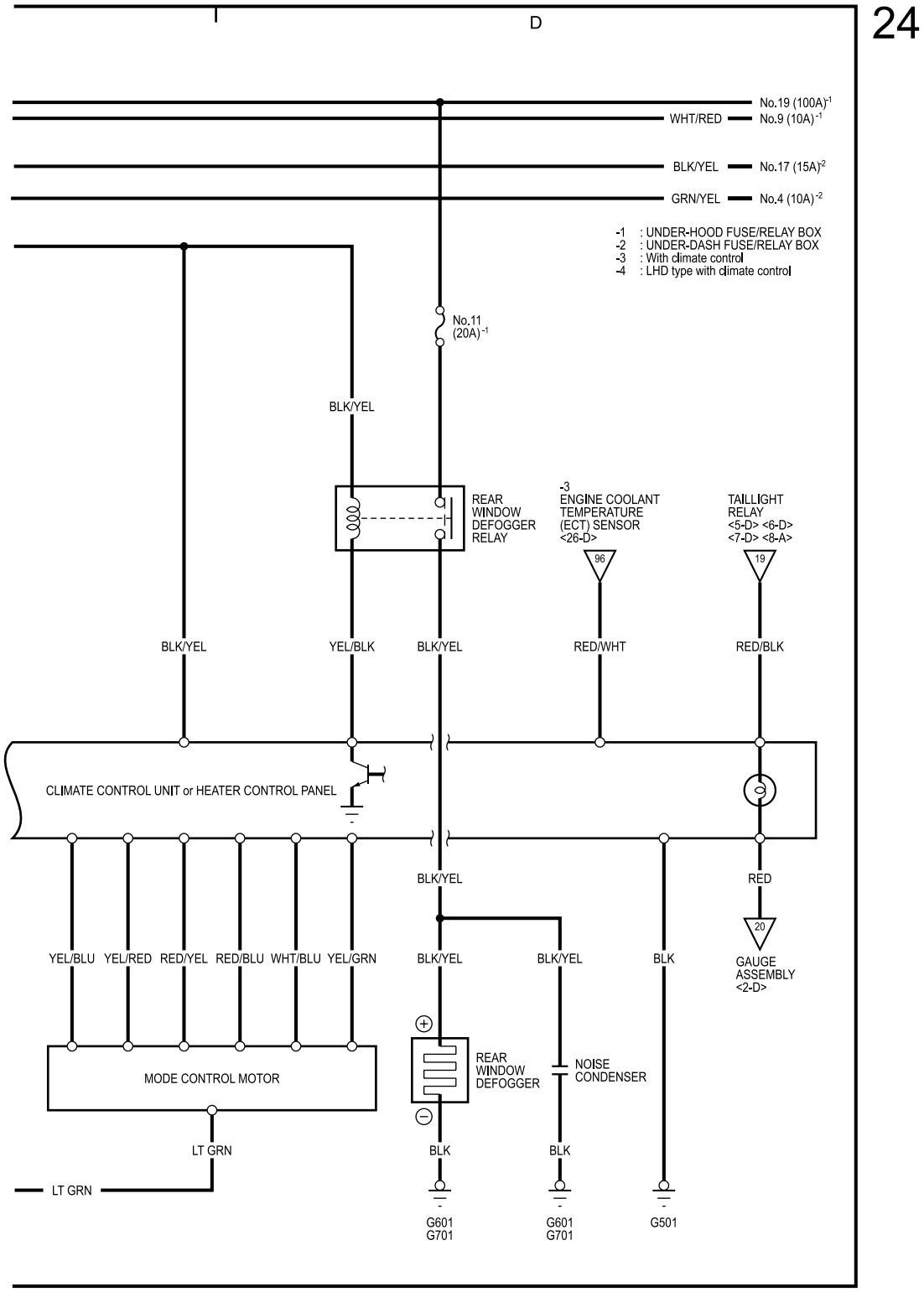
24
D
No.19 (100A)-1
WHT/RED
No.9 (10A)-1
BLK/YEL
No.17 (15A)-2
GRN/YEL
No.4 (10A)-2
-1 : UNDER-HOOD FUSE/RELAY BOX
-2 : UNDER-DASH FUSE/RELAY BOX
-3 : With climate control
-4 : LHD type with climate control
No.11 (20A)-1
BLK/YEL
REAR WINDOW DEFOGGER RELAY
-3 ENGINE COOLANT TEMPERATURE (ECT) SENSOR <26-D>
96
TAILLIGHT RELAY <5-D> <6-D> <7-D> <8-A>
19
BLK/YEL
YEL/BLK
BLK/YEL
RED/WHT
RED/BLK
CLIMATE CONTROL UNIT or HEATER CONTROL PANEL
BLK/YEL
RED
20
GAUGE ASSEMBLY <2-D>
YEL/BLU
YEL/RED
RED/YEL
RED/BLU
WHT/BLU
YEL/GRN
BLK/YEL
BLK/YEL
BLK
REAR WINDOW DEFOGGER
NOISE CONDENSER
MODE CONTROL MOTOR
LT GRN
BLK
BLK
LT GRN
G601
G701
G601
G701
G501

PGM-FI System, Immobilizer System

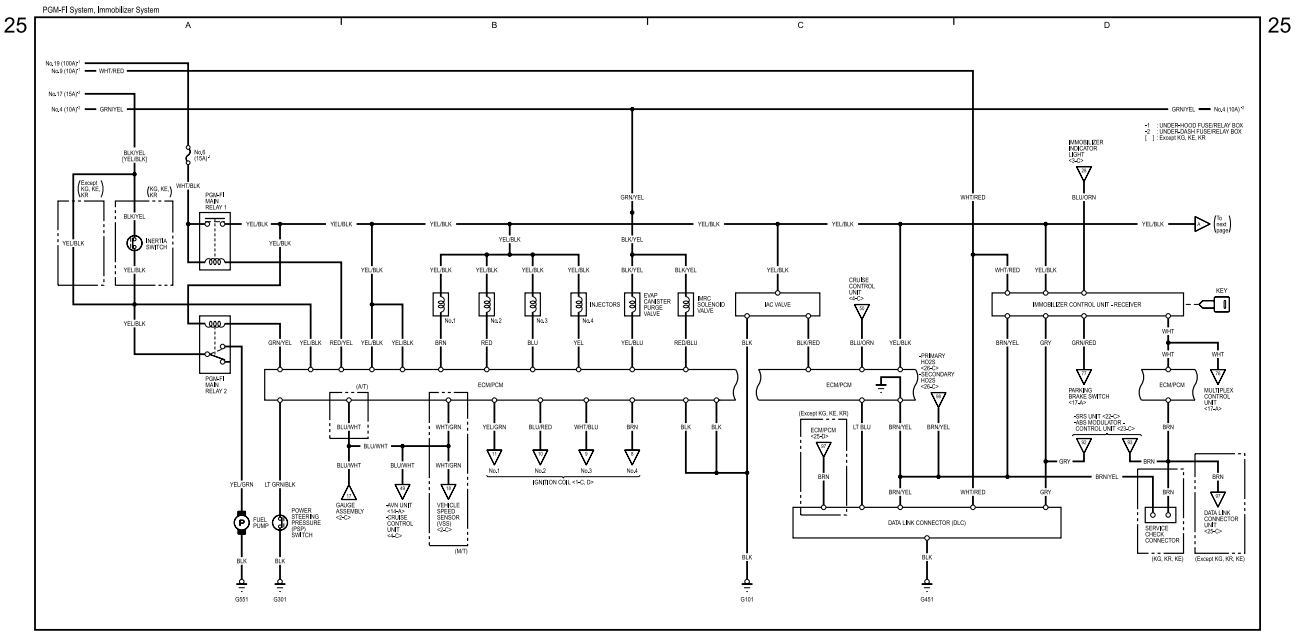

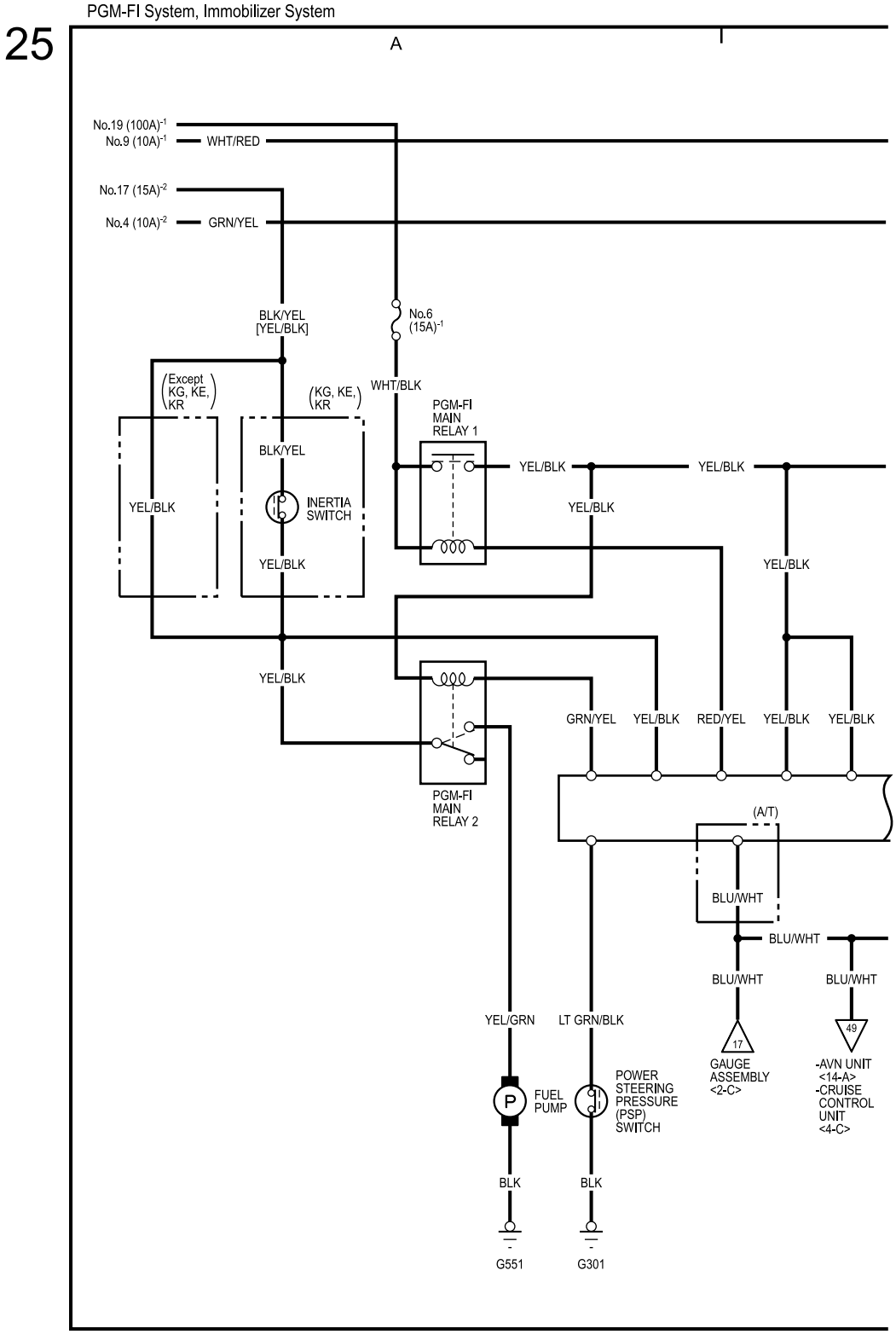
PGM-FI System, Immobilizer System
25
A
No.19 (100A)-1
No.9 (10A)-1
WHT/RED
No.17 (15A)-2
No.4 (10A)-2
GRN/YEL
BLK/YEL
[YEL/BLK]
No.6
(15A)-1
WHT/BLK
Except
KG, KE,
KR
KG, KE,
KR
PGM-FI
MAIN
RELAY 1
BLK/YEL
INERTIA
SWITCH
YEL/BLK
YEL/BLK
YEL/BLK
YEL/BLK
YEL/BLK
YEL/BLK
YEL/BLK
YEL/BLK
GRN/YEL
YEL/BLK
RED/YEL
YEL/BLK
YEL/BLK
PGM-FI
MAIN
RELAY 2
(A/T)
BLU/WHT
BLU/WHT
BLU/WHT
BLU/WHT
17
49
GAUGE
ASSEMBLY
<2-C>
-AVN UNIT
<14-A>
-CRUISE
CONTROL
UNIT
<4-C>
YEL/GRN
LT GRN/BLK
P
FUEL
PUMP
POWER
STEERING
PRESSURE
(PSP)
SWITCH
BLK
BLK
G551
G301

PGM-FI System, Immobilizer System (cont'd)

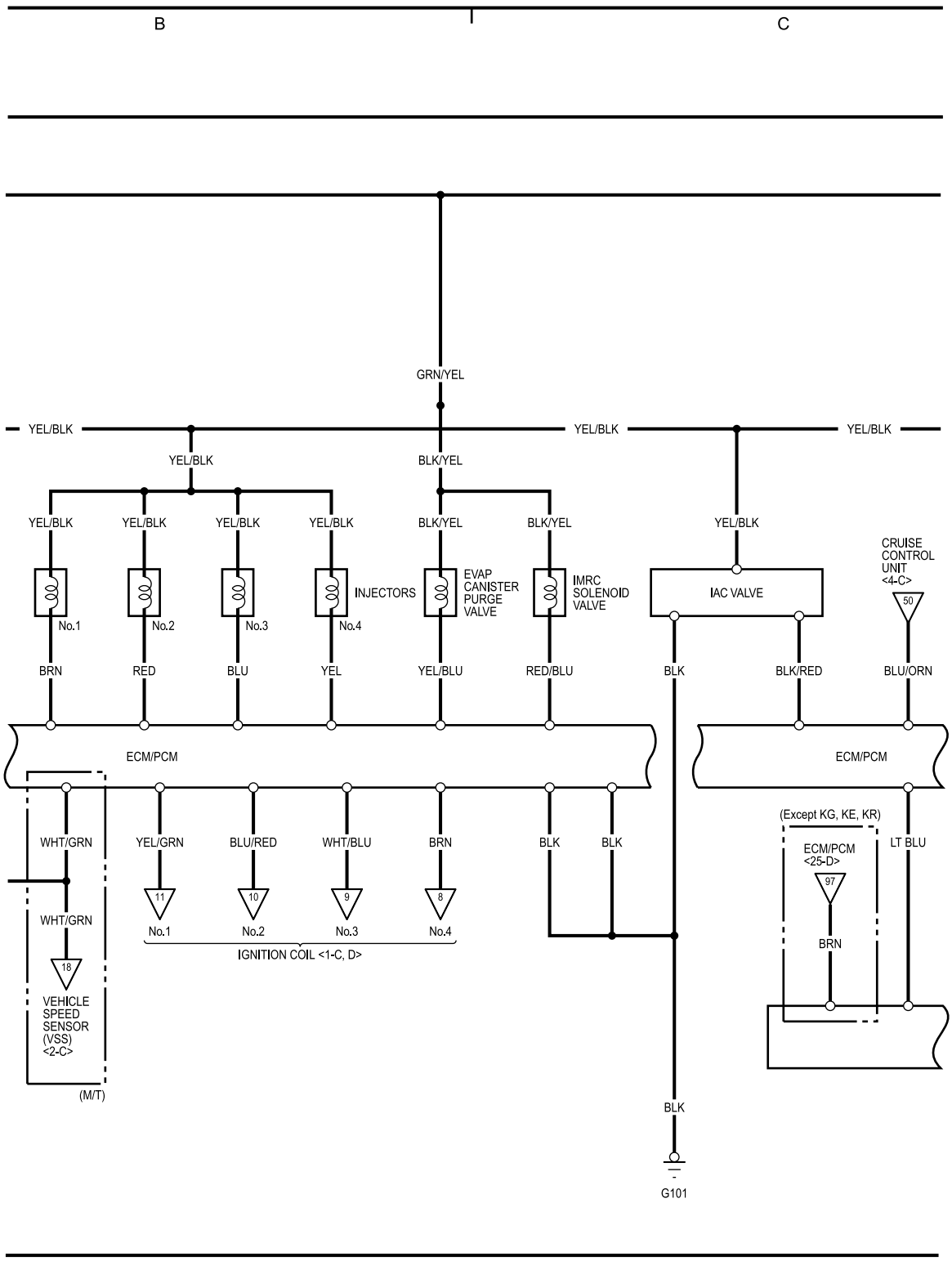

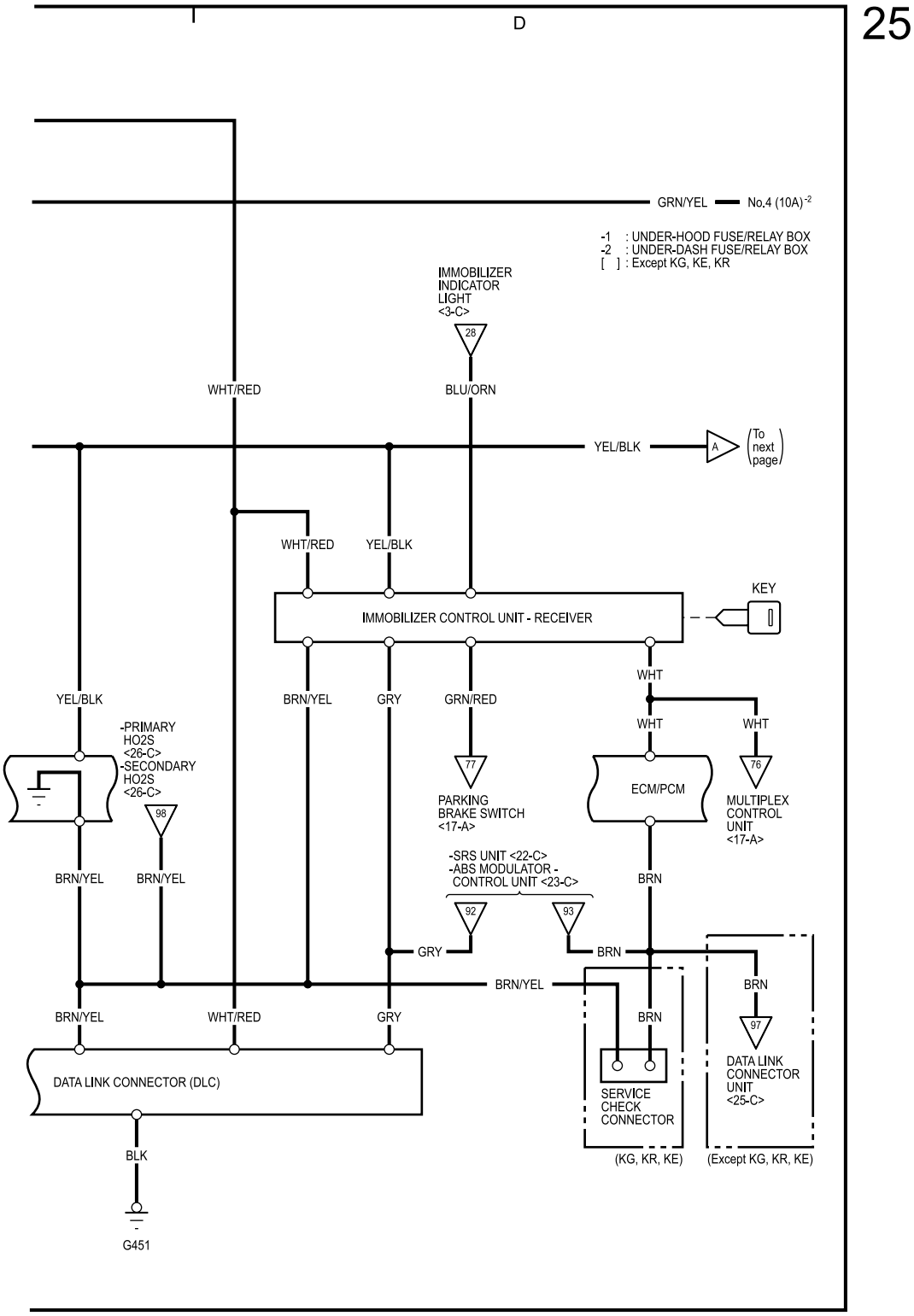
25
D
GRN/YEL
No.4 (10A)-2
-1 : UNDER-HOOD FUSE/RELAY BOX
-2 : UNDER-DASH FUSE/RELAY BOX
[ ] : Except KG, KE, KR
IMMOBILIZER INDICATOR LIGHT <3-C>
28
WHT/RED
BLU/ORN
YEL/BLK
A
To next page
WHT/RED
YEL/BLK
KEY
IMMOBILIZER CONTROL UNIT - RECEIVER
WHT
YEL/BLK
BRN/YEL
GRY
GRN/RED
WHT
WHT
-PRIMARY HO2S <26-C>
-SECONDARY HO2S <26-C>
77
76
ECM/PCM
PARKING BRAKE SWITCH <17-A>
MULTIPLEX CONTROL UNIT <17-A>
98
-SRS UNIT <22-C>
-ABS MODULATOR - CONTROL UNIT <23-C>
BRN/YEL
BRN/YEL
BRN
92
93
GRY
BRN
BRN/YEL
BRN
BRN/YEL
WHT/RED
GRY
BRN
97
DATA LINK CONNECTOR (DLC)
SERVICE CHECK CONNECTOR
DATA LINK CONNECTOR UNIT <25-C>
BLK
(KG, KR, KE)
(Except KG, KR, KE)
G451

PGM-FI System

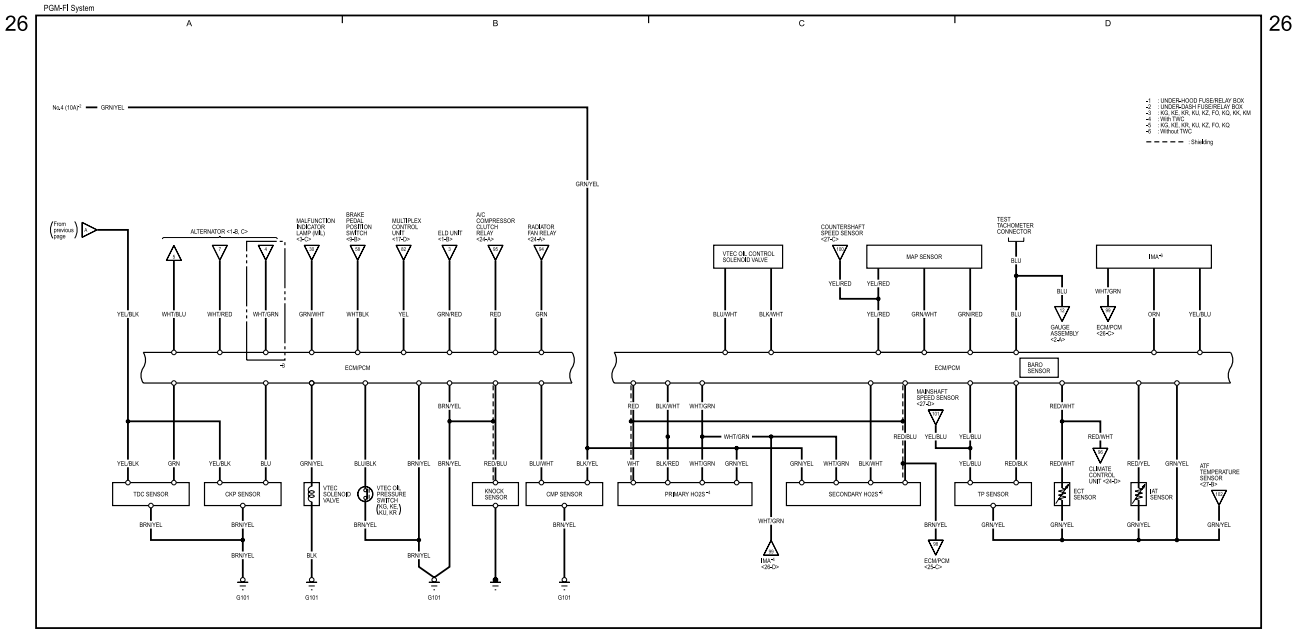

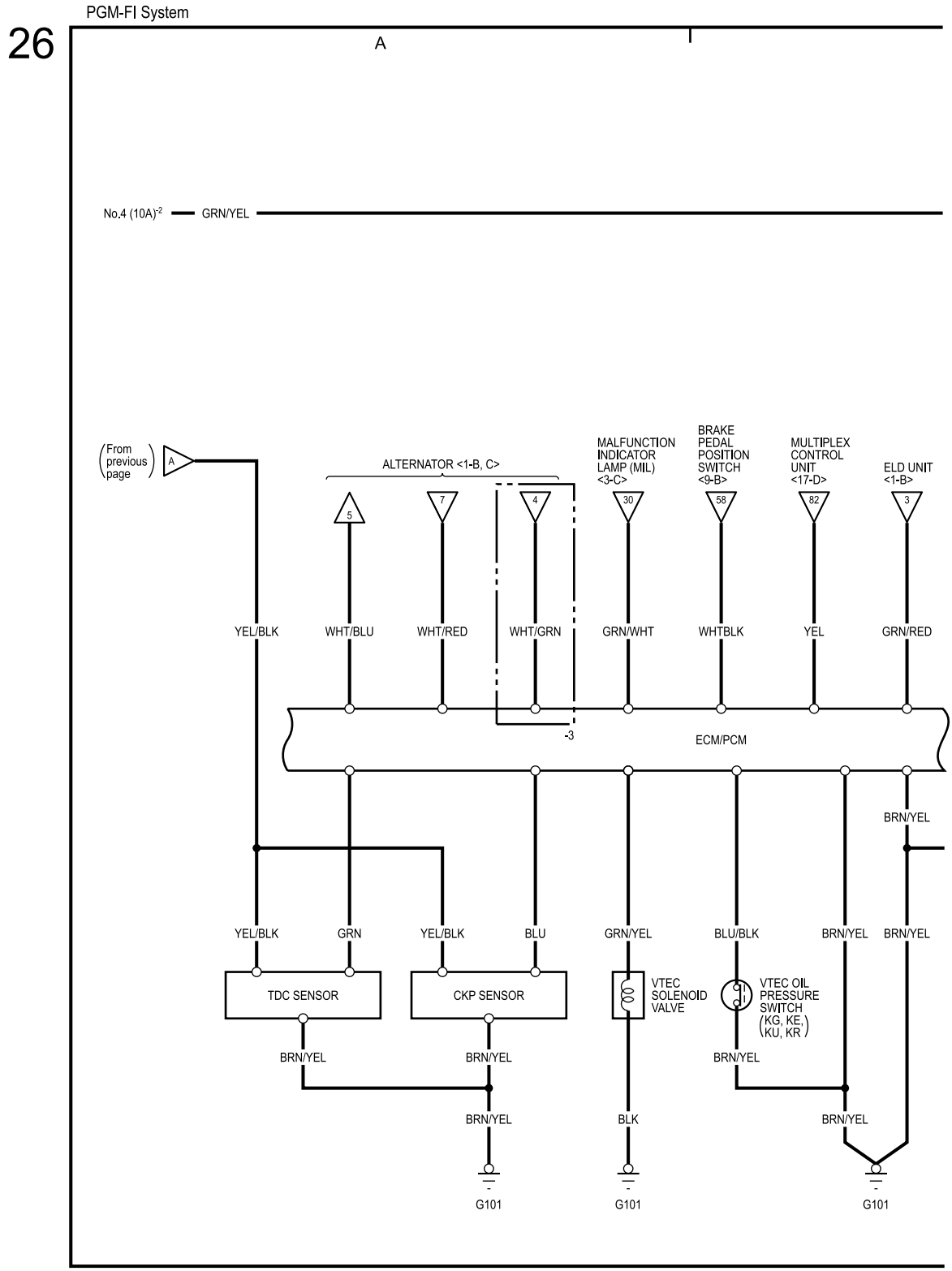
PGM-FI System
26
A
No.4 (10A)-2
GRN/YEL
From previous page
A
ALTERNATOR <1-B, C>
MALFUNCTION INDICATOR LAMP (MIL) <3-C>
BRAKE PEDAL POSITION SWITCH <9-B>
MULTIPLEX CONTROL UNIT <17-D>
ELD UNIT <1-B>
5
7
4
30
58
82
3
YEL/BLK
WHT/BLU
WHT/RED
WHT/GRN
GRN/WHT
WHTBLK
YEL
GRN/RED
-3
ECM/PCM
BRN/YEL
YEL/BLK
GRN
YEL/BLK
BLU
GRN/YEL
BLU/BLK
BRN/YEL
BRN/YEL
TDC SENSOR
CKP SENSOR
VTEC SOLENOID VALVE
VTEC OIL PRESSURE SWITCH (KG, KE, KU, KR)
BRN/YEL
BRN/YEL
BRN/YEL
BRN/YEL
BLK
BRN/YEL
G101
G101
G101

PGM-FI System (cont'd)

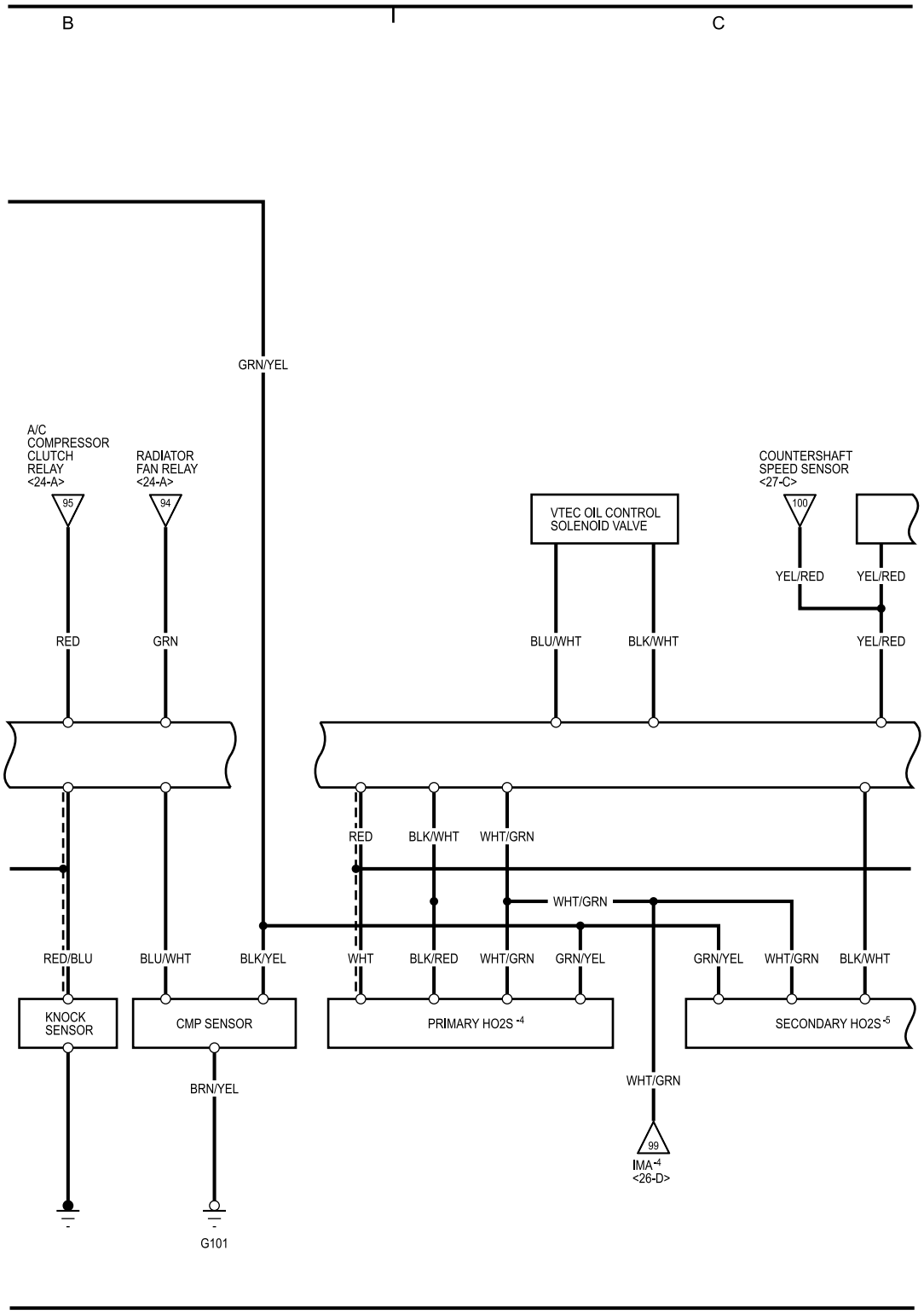

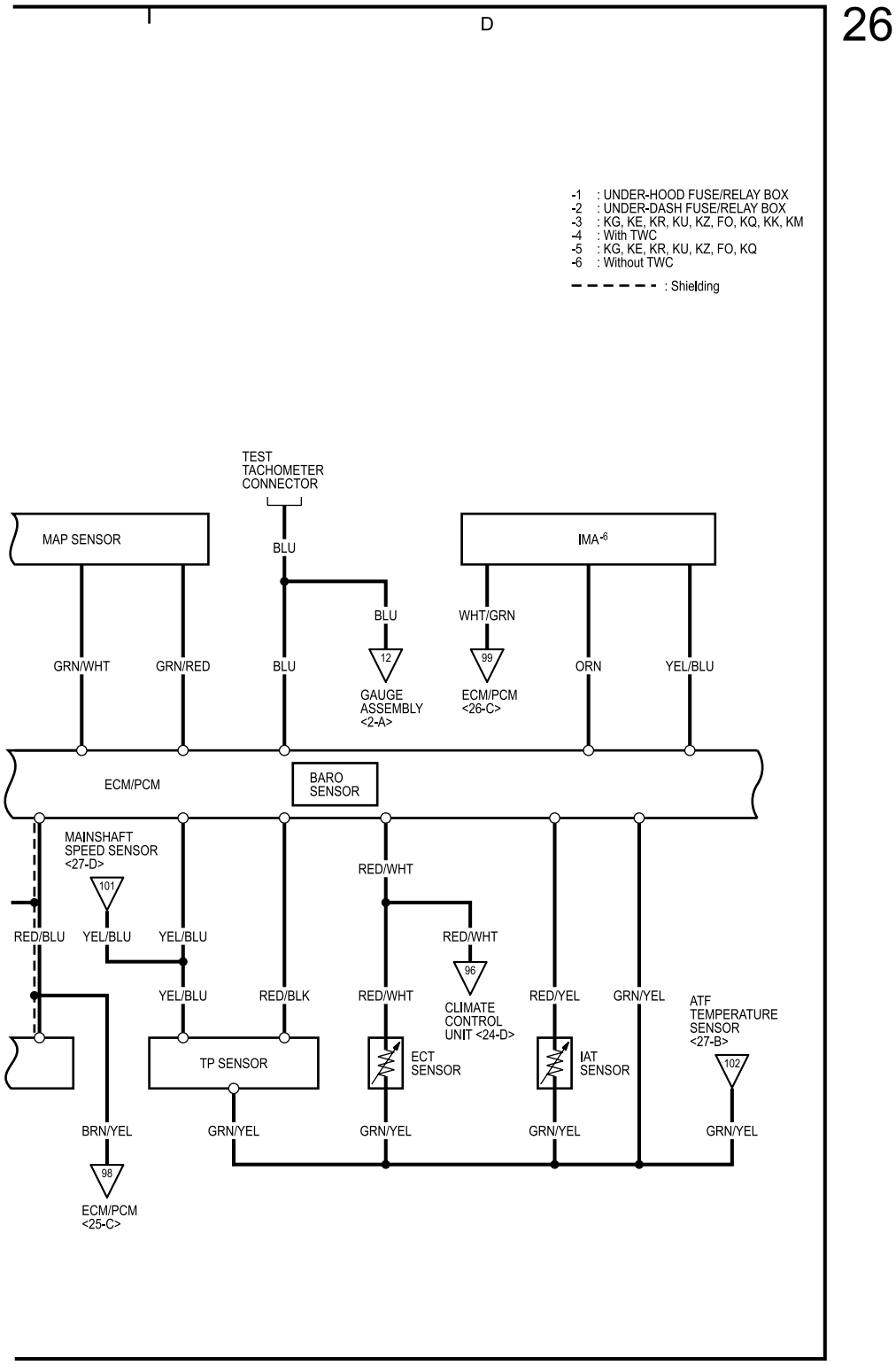
26
D
-1 : UNDER-HOOD FUSE/RELAY BOX
-2 : UNDER-DASH FUSE/RELAY BOX
-3 : KG, KE, KR, KU, KZ, FO, KQ, KK, KM
-4 : With TWC
-5 : KG, KE, KR, KU, KZ, FO, KQ
-6 : Without TWC
: Shielding
TEST TACHOMETER CONNECTOR
MAP SENSOR
BLU
IMA-6
BLU
WHT/GRN
GRN/WHT
GRN/RED
BLU
12
99
ORN
YEL/BLU
GAUGE ASSEMBLY <2-A>
ECM/PCM <26-C>
ECM/PCM
BARO SENSOR
MAINSHAFT SPEED SENSOR <27-D>
101
RED/WHT
RED/BLU
YEL/BLU
YEL/BLU
RED/WHT
96
YEL/BLU
RED/BLK
RED/WHT
RED/YEL
GRN/YEL
CLIMATE CONTROL UNIT <24-D>
ATF TEMPERATURE SENSOR <27-B>
TP SENSOR
ECT SENSOR
IAT SENSOR
102
BRN/YEL
GRN/YEL
GRN/YEL
GRN/YEL
GRN/YEL
98
ECM/PCM <25-C>

PGM-FI System (A/T)

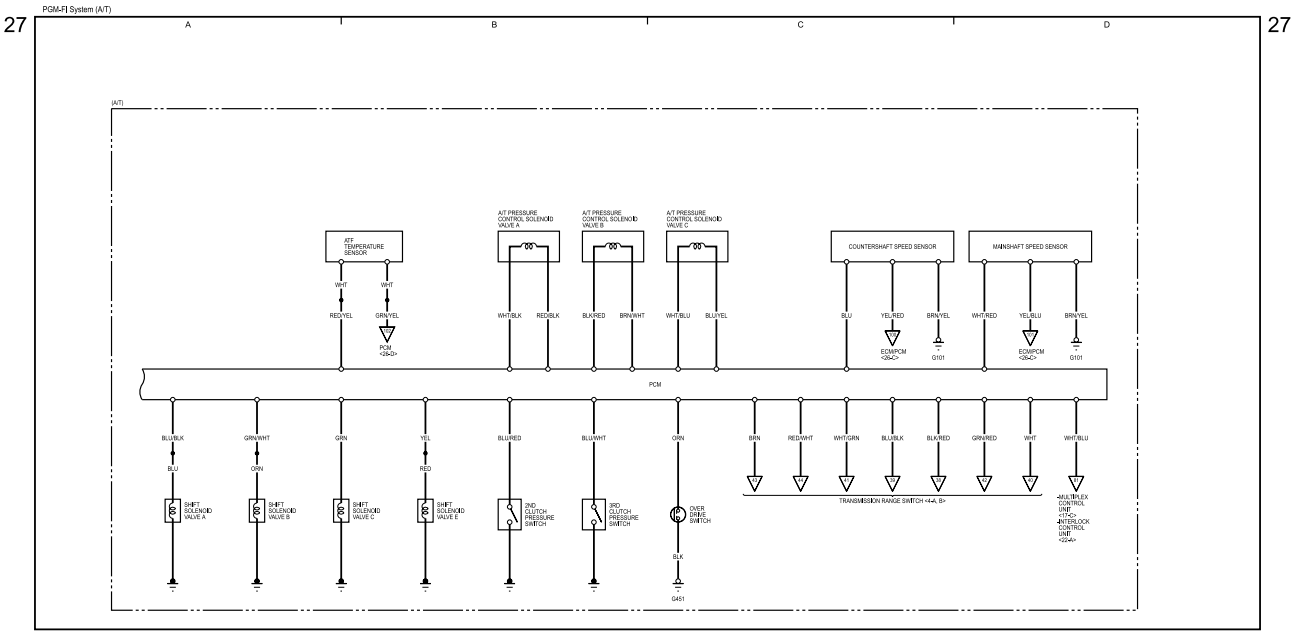

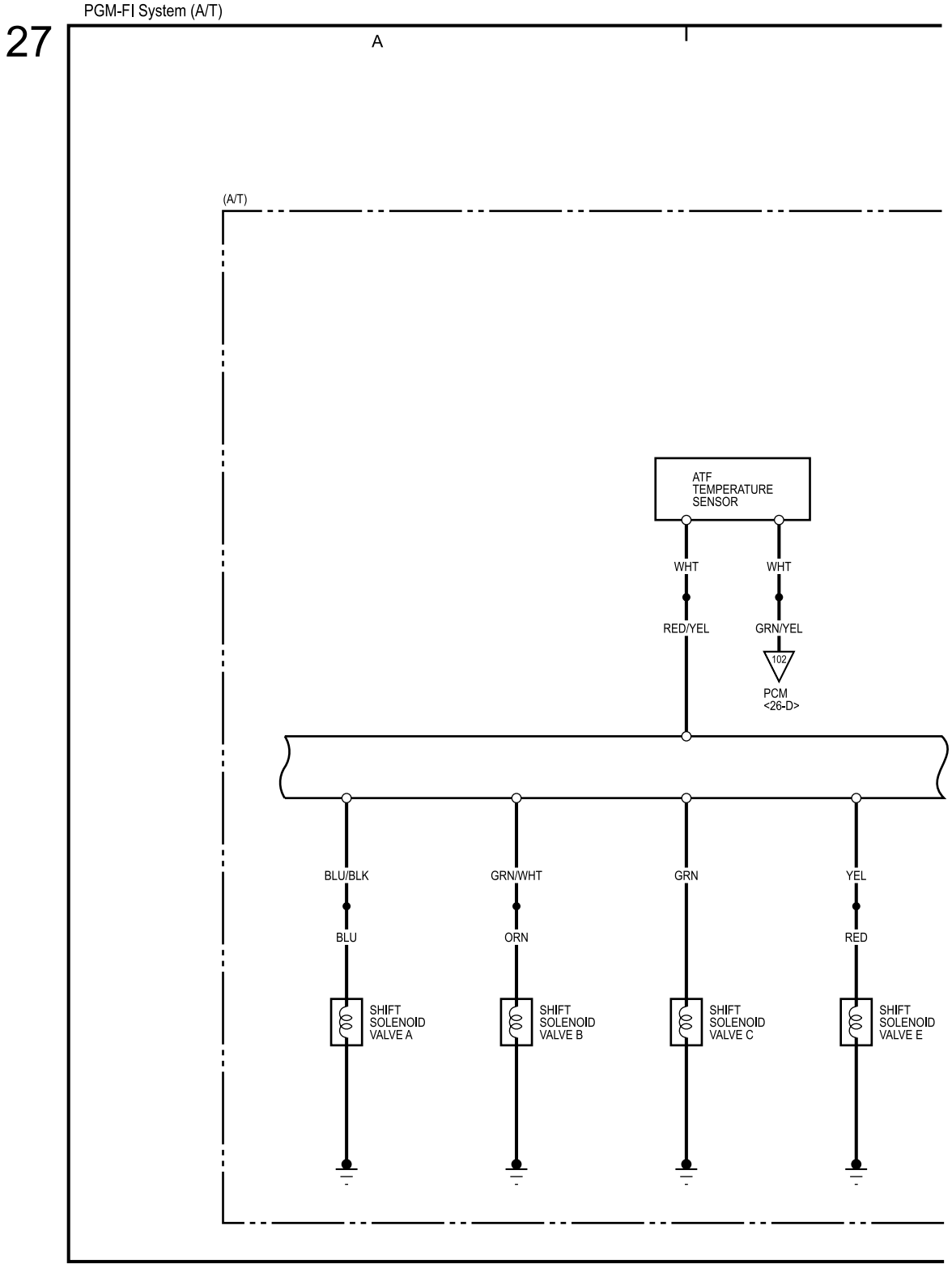
PGM-FI System (A/T)
27
A
(A/T)
ATF
TEMPERATURE
SENSOR
WHT
WHT
RED/YEL
GRN/YEL
102
PCM
<26-D>
BLU/BLK
GRN/WHT
GRN
YEL
BLU
ORN
RED
SHIFT
SOLENOID
VALVE A
SHIFT
SOLENOID
VALVE B
SHIFT
SOLENOID
VALVE C
SHIFT
SOLENOID
VALVE E

PGM-FI System (A/T) (cont'd)

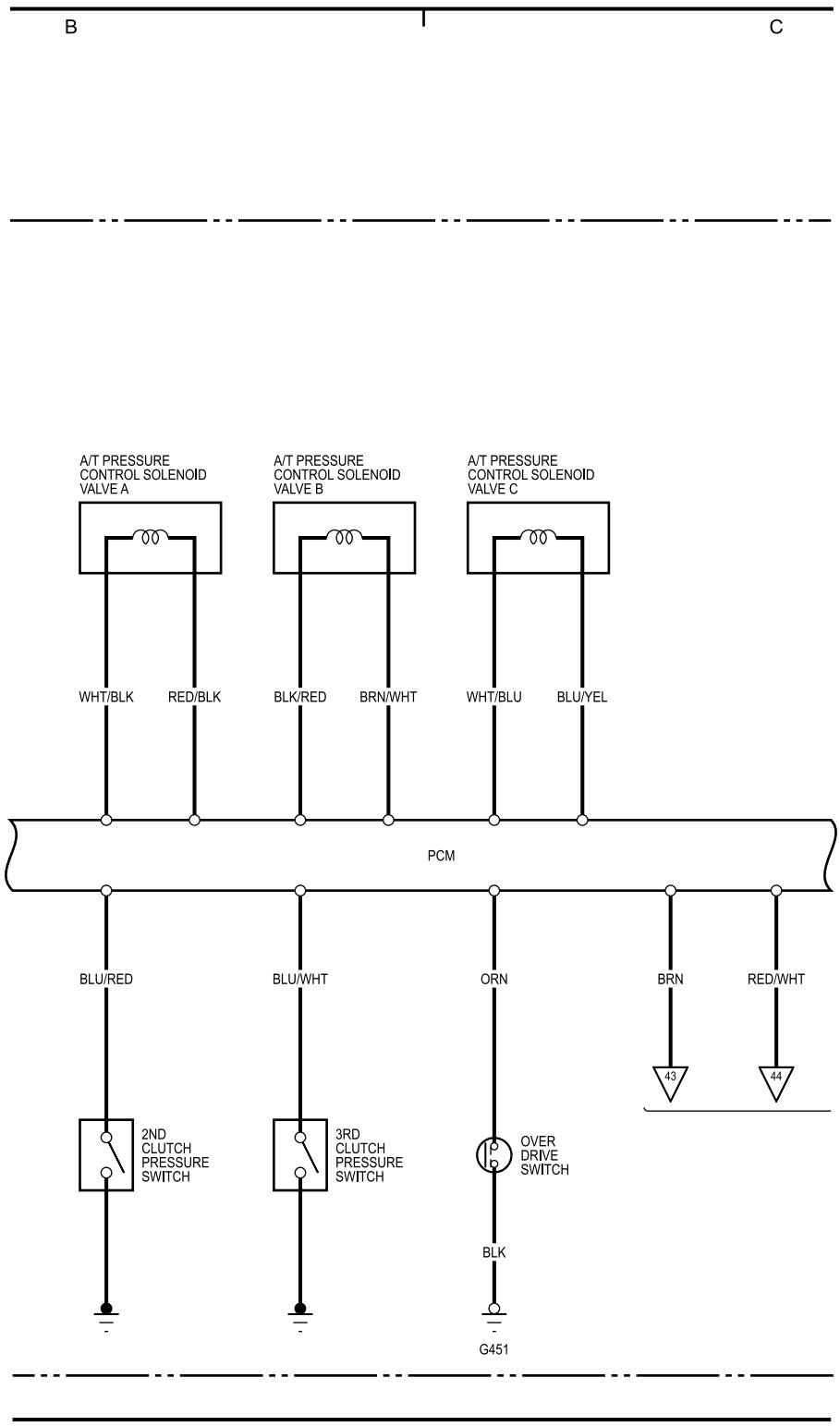

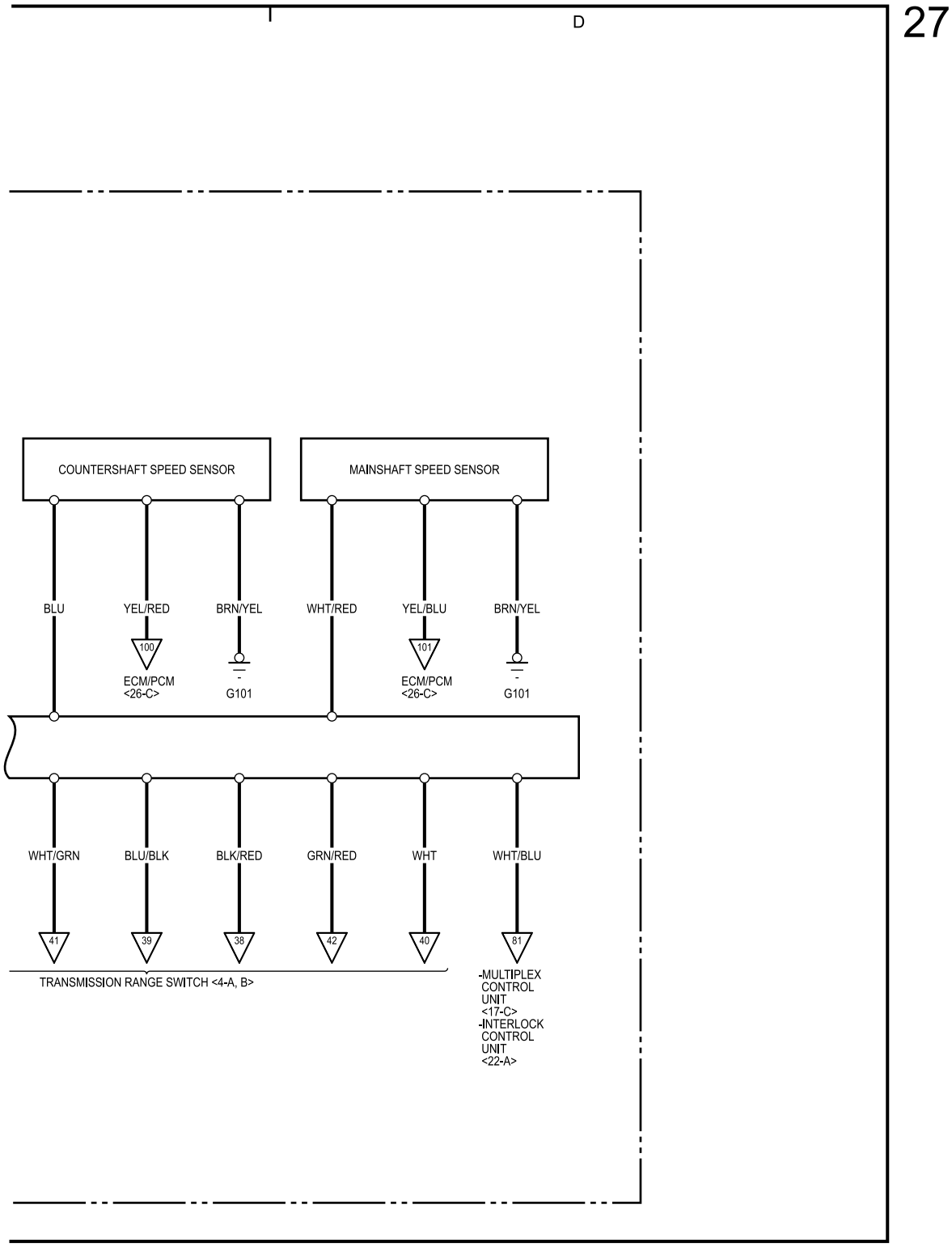
27
D
COUNTERSHAFT SPEED SENSOR
MAINSHAFT SPEED SENSOR
BLU
YEL/RED
BRN/YEL
WHT/RED
YEL/BLU
BRN/YEL
100
101
ECM/PCM
<26-C>
G101
ECM/PCM
<26-C>
G101
WHT/GRN
BLU/BLK
BLK/RED
GRN/RED
WHT
WHT/BLU
41
39
38
42
40
81
TRANSMISSION RANGE SWITCH <4-A, B>
-MULTIPLEX
CONTROL
UNIT
<17-C>
-INTERLOCK
CONTROL
UNIT
<22-A>