VOLKSWAGEN

LT 2.4

1983 to 1993

Haynes THE BOOK

Automotive Technical DATA BOOK

Click on one of the buttons above to view data for this car. To return to this screen and make another choice, click anywhere on the data screen.

Engine and cooling system

LT 2.4 1983 to 1993

Type		DL. 66kW
Capacity (cm³) / number of cylinders		2383 / 6
Compression ratio / pressure	bar	8.1 / ≥7.0
Oil pressure	bar	[2.0]
Oil temperature	ºC	80
Valve clearance - inlet	mm	0.20±0.05[1]
Valve clearance - exhaust	mm	0.40±0.05[1]
Firing order		1-5-3-6-2-4
No 1 cylinder position		TBE
Thermostat opening temperature	ºC	87. 3.90 ▶: 80
Radiator cap pressure	bar	1.2 to 1.5

Fuel system

LT 2.4 1983 to 1993

Idle speed - manual [auto]	rpm	800±50 (2E3: 750±50)
Fast idle speed - manual [auto]	rpm	1800±50
CO @ idle speed [3000 rpm] - see page VI	%	1.0±0.5
HC @ idle speed [3000 rpm] - see page VI	ppm	≤1200
CO2 @ idle speed [3000 rpm] - see page VI	%	_
O2 @ idle speed [3000 rpm] - see page VI	%	_
Carburettor / fuel injection		Pierburg
Type / ref		2B6 (10.86 ▶: 2E3)
Main jet / needle		115, 112.5 (2E3: 107.5, 135)
Injection pressure	bar	_
Pump pressure	bar	_
Octane rating	RON	91[2]

Ignition system

LT 2.4 1983 to 1993

Type		Contact breaker - CIS
Ignition coil		Bosch
Primary resistance	ohms	1.7 to 2.1
Ballast resistor	ohms	_
Voltage - Tmnl 15(+) to earth	V	_
Distributor		Bosch
Points gap (air gap)	mm	0.40
Dwell angle	º (%)	38±3
Condenser capacity	µF	_
Rotation		_
Ignition timing - basic [static	º Crankshaft @ rpm	7.5±1 BTDC @ idle
V = Vacuum NV = No Vacuum		NV
Total ignition advance	º Crankshaft @ rpm	_
	º Crankshaft @ rpm	_
	º Crankshaft @ rpm	_
Centrifugal check.	º Crankshaft @ rpm	0 @ 1100 to 1400
	º Crankshaft @ rpm	14 to 19 @ 2500
	º Crankshaft @ rpm	25 to 29 @ 4150
Vacuum range check	mbar	100 to 400[3]
Maximum vacuum advance	º Crankshaft	20 to 24[3]
Spark plugs		Bosch/Champion
Type		W7DC / N7YC
Electrode gap	mm	0.60 to 0.80

Electrical system

LT 2.4 1983 to 1993

Battery	V / CC / RC	12 / 220 / 75
Alternator voltage / full load current / engine rpm		_
Starter motor current / voltage - cranking	A / V	_
- locked	A / V	_

Running gear

LT 2.4 1983 to 1993

Brakes -		
Front (min. friction material thickness)	mm	2.0
Rear (min. friction material thickness)	mm	2.5
Tyres		
Saloon	Size	_
Estate / Van	Size	185x14: 195x14: 205x14: 215x14
Pressure - front / rear - Saloon	bar	_
- Estate / Van	bar	WSM
Front suspension / wheel alignment		
Toe-in (+) / Toe-out (–)	mm [º]	+3.0 to 6.0[4]
Camber		+40'±20'[5]
Castor		+2°30'±40'[6]
King pin inclination		_
Rear suspension / wheel alignment		
Toe-in (+) / Toe-out (–)	mm [º]	[+20'±40'][7]
Camber		0±25' N/A

Torque wrench settings

LT 2.4 1983 to 1993

Cylinder head - stage 1	Nm	40
- stage 2	Nm	60
Cylinder head - stage 3	Nm	+ 180°. Warm up
- stage 4	Nm	+ 90°
Big-end bearings	Nm	50[8]
Main bearings	Nm	65
Clutch cover	Nm	25
Flywheel [driveplate]	Nm	60 + 90° N
Front hubs	Nm	WSM
Rear hubs	Nm	WSM
Wheel nuts / bolts	Nm	320. LT28/31: 200
Spark plugs	Nm	20

Capacities

LT 2.4 1983 to 1993

Engine oil & filter	litres	7.0
Gearbox - 4-speed [5-speed]	litres	3.5
Automatic transmission - refill	litres	_
Final drive	litres	1.8[9]
Cooling system	litres	13.0
Fuel tank	litres	70. Option: 110

Notes and Illustrations

[1]0: Models with hydraulic adjusters
[2]1 tank leaded fuel every 5th filling. 84 ▶: [E 95 RON]
[3]10.86 ▶ (with 2E3): 100 to 340 @ 16 to 20°
[4]LT 40, 45, 50: 0 to +2.2
[5]LT 40, 45, 50: +10'±35'
[6]LT 40, 45, 50: +3°25'±20'
[7]LT 40, 45, 50: [0±20']
[8]Stretch bolts: 30 + 180° N
[9]Twin rear wheels: 2.4

1: Idle speed 2: CO / Mixture

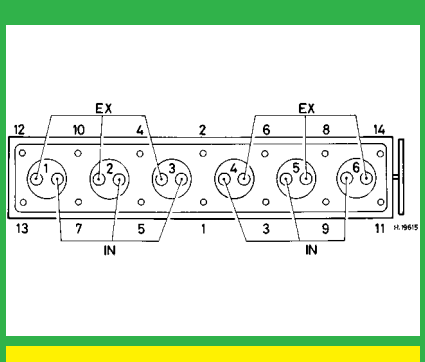

2383 cm³

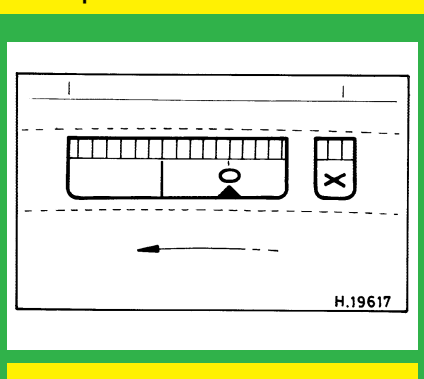

2383 cm³

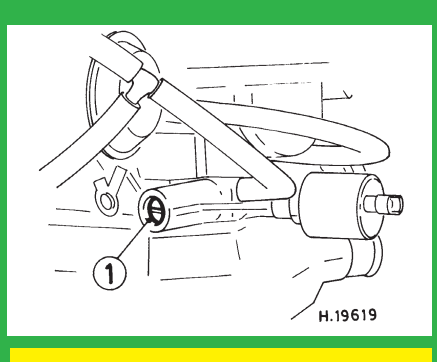

Pierburg 2B6

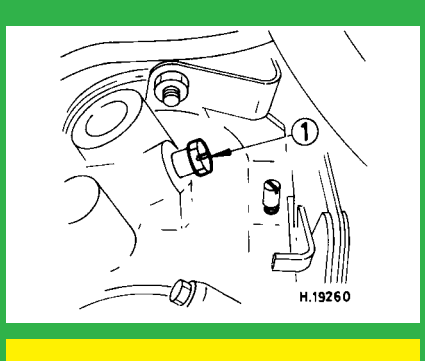

Pierburg 2B6

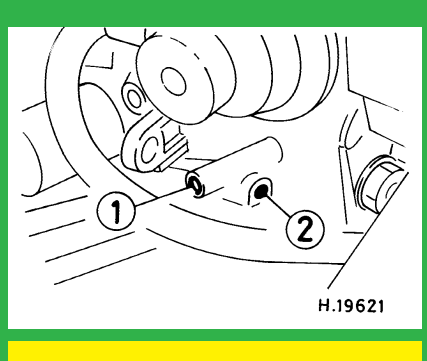

Pierburg 2E3