Haynes THE BOOK

Automotive Technical DATA BOOK

Click on one of the buttons above to view data for this car. To return to this screen and make another choice, click anywhere on the data screen.

MENU | HELP

## Engine and cooling system

| | | 240, 2.3i CAT 1993 |
|---|---|---|
| Type | | B230FD. SOHC 8V. 85kW |
| Capacity (cm³) / number of cylinders | | 2316 / 4 |
| Compression ratio / pressure | bar | 10.0 / ≥9.2 |
| Oil pressure | bar | 1.0 [2.5 to 8.0] |
| Oil temperature | ºC | 80 |
| Valve clearance - inlet | mm | 0.30 to 0.40 H |
| - exhaust | mm | 0.30 to 0.40 H |
| Firing order | | 1-3-4-2 |
| No 1 cylinder position | | TBE |
| Thermostat opening temperature | ºC | 86 to 88 or 91 to 93 |
| Radiator cap pressure | bar | 0.66 to 0.87 |

## Fuel system

| | | 240, 2.3i CAT 1993 |
|---|---|---|
| Idle speed - manual [auto] | rpm | 775±50 |
| Fast idle speed - manual [auto] | rpm | _ |
| CO @ idle speed [3000 rpm] - see page VI | % | 0.4 to 0.8 N/A |
| HC @ idle speed [3000 rpm] - see page VI | ppm | ≤200 |
| CO2 @ idle speed [3000 rpm] - see page VI | % | _ |
| O2 @ idle speed [3000 rpm] - see page VI | % | _ |
| Carburettor / fuel injection | | Bosch |
| Type / ref | | LH2.4-Jetronic |
| Main jet / needle | | _ |
| Injection pressure | bar | _ |
| Pump pressure | bar | 1.9 to 3.0 |
| Octane rating | RON | 95[U] |

## Ignition system

| | | 240, 2.3i CAT 1993 |
|---|---|---|
| Type | | EZ 116K |
| Ignition coil | | Bosch |
| Primary resistance | ohms | 0.6 to 0.8 |
| Ballast resistor | ohms | _ |
| Voltage - Tmnl 15(+) to earth | V | _ |
| Distributor | | Bosch |
| Points gap (air gap) | mm | _ |
| Dwell angle | º (%) | _ |
| Condenser capacity | µF | _ |
| Rotation | | Clockwise |
| Ignition timing - basic [static | º Crankshaft @ rpm | 12 BTDC @ 775±50 |
| V = Vacuum NV = No Vacuum | | _ |
| Total ignition advance | º Crankshaft @ rpm | _ |
| | º Crankshaft @ rpm | _ |
| | º Crankshaft @ rpm | _ |
| Centrifugal check. | º Crankshaft @ rpm | Computer control |
| | º Crankshaft @ rpm | _ |
| | º Crankshaft @ rpm | _ |
| Vacuum range check | mbar | Computer control |
| Maximum vacuum advance | º Crankshaft | _ |
| Spark plugs | | Bosch/Champion |
| Type | | WR7DC / RN9YC |
| Electrode gap | mm | 0.70 to 0.80 |

## Electrical system

| | | 240, 2.3i CAT 1993 |
|---|---|---|
| Battery | V / CC / RC | 12 / 450 / 90 |
| Alternator voltage / full load current / engine rpm | | Various |
| Starter motor current / voltage - cranking | A / V | Various |
| - locked | A / V | Various |

## Running gear

| | | 240, 2.3i CAT 1993 |
|---|---|---|
| **Brakes** - | | |
| Front (min. friction material thickness) | mm | 3.0 |
| Rear (min. friction material thickness) | mm | 3.0 |
| **Tyres** | | |
| Saloon | Size | 175x14: 185/70x14: 195/60x15 |
| Estate / Van | Size | 185x14: 195/60x15 |
| Pressure - front / rear - Saloon | bar | 1.8 / 1.9 |
| - Estate / Van | bar | 1.9 / 2.1. 195/60: 1.8 / 2.1 |
| **Front suspension / wheel alignment** | | |
| Toe-in (+) / Toe-out (–) | mm [º] | [+24'±8'] PAS: [+16'±8'] |
| Camber | | +15' to 1° |
| Castor | | +2° to 3° PAS: +3° to 4° |
| King pin inclination | | _ |
| **Rear suspension / wheel alignment** | | |
| Toe-in (+) / Toe-out (–) | mm [º] | _ |
| Camber | | _ |

## Torque wrench settings

| | | 240, 2.3i CAT 1993 |
|---|---|---|
| Cylinder head - stage 1 | Nm | 20 |
| - stage 2 | Nm | 60 |
| - stage 3 | Nm | + 90° |
| - stage 4 | Nm | _ |
| Big-end bearings | Nm | 20 + 90° |
| Main bearings | Nm | 110 |
| Clutch cover | Nm | _ |
| Flywheel [driveplate] | Nm | 70 N |
| Front hubs | Nm | 68, - 120° & lock |
| Rear hubs | Nm | WSM |
| Wheel nuts / bolts | Nm | 115 |
| Spark plugs | Nm | 20 to 30 |

## Capacities

| | | 240, 2.3i CAT 1993 |
|---|---|---|
| Engine oil & filter | litres | 3.85 |
| Gearbox - 4-speed [5-speed] | litres | 1.6 |
| Automatic transmission - refill | litres | 3.9 |
| Final drive | litres | 1031: 1.75. 1041: 1.60 |
| Cooling system | litres | 8.5 |
| Fuel tank | litres | 60 |

## Notes and Illustrations

1: Idle speed 2: CO / Mixture

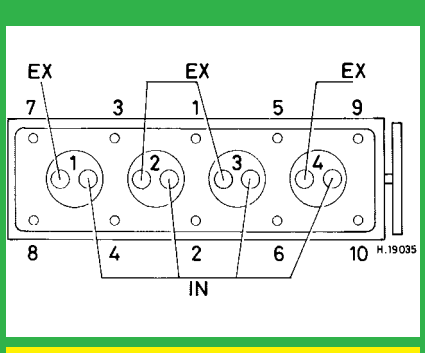


2316 cm³

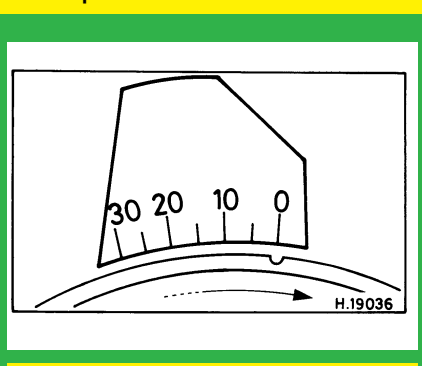


2316 cm³

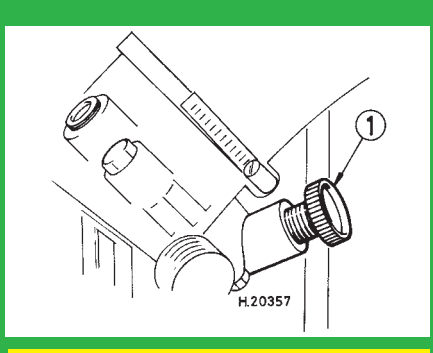


LH2.4-Jetronic

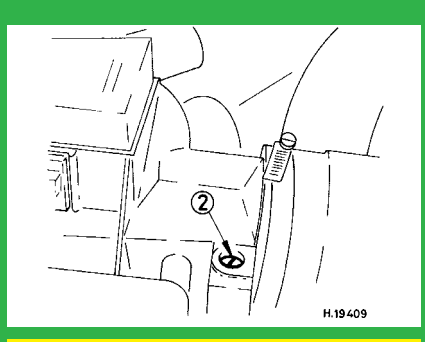


LH2.4-Jetronic