VAUXHALL/OPEL

Midi 1.8

1984 to 1988

Haynes THE BOOK

Automotive Technical DATA BOOK

Click on one of the buttons above to view data for this car. To return to this screen and make another choice, click anywhere on the data screen.

Engine and cooling system

		Midi 1.8 1984 to 1988
Type		OHC
Capacity (cm³) / number of cylinders		1817 / 4
Compression ratio / pressure	bar	8.5 / 12.3
Oil pressure	bar	[3.9]
Oil temperature	ºC	80
Valve clearance - inlet	mm	0.15
Valve clearance - exhaust	mm	0.25
Firing order		1-3-4-2
No 1 cylinder position		TBE
Thermostat opening temperature	ºC	80.5 to 83.5
Radiator cap pressure	bar	0.9 to 1.2

Fuel system

		Midi 1.8 1984 to 1988
Idle speed - manual [auto]	rpm	800
Fast idle speed - manual [auto]	rpm	2700 to 3000
CO @ idle speed [3000 rpm] - see page VI	%	2.5±0.5
HC @ idle speed [3000 rpm] - see page VI	ppm	≤1200
CO2 @ idle speed [3000 rpm] - see page VI	%	_
O2 @ idle speed [3000 rpm] - see page VI	%	_
Carburettor / fuel injection		Nippon Kikaki/Stromberg
Type / ref		21E 304-151
Main jet / needle		108, 165
Injection pressure	bar	_
Pump pressure	bar	0.25
Octane rating	RON	90[E 95 RON]

Ignition system

		Midi 1.8 1984 to 1988
Type		Electronic
Ignition coil		Nippon Denso
Primary resistance	ohms	1.33 to 1.63
Ballast resistor	ohms	1.2
Voltage - Tmnl 15(+) to earth	V	12
Distributor		Nippon Denso
Points gap (air gap)	mm	[0.20 to 0.40]
Dwell angle	º (%)	_
Condenser capacity	µF	_
Rotation		Clockwise
Ignition timing - basic [static	º Crankshaft @ rpm	6 BTDC @ 800
V = Vacuum NV = No Vacuum		V
Total ignition advance	º Crankshaft @ rpm	_
	º Crankshaft @ rpm	_
	º Crankshaft @ rpm	_
Centrifugal check.	º Crankshaft @ rpm	0 @ 800 to 1400
	º Crankshaft @ rpm	8 to 11 @ 2500
	º Crankshaft @ rpm	16 to 19 @ 3400
Vacuum range check	mbar	70 to 373
Maximum vacuum advance	º Crankshaft	16
Spark plugs		NGK/Champion
Type		BPR6ES / RN9YC
Electrode gap	mm	1.00 to 1.10

Electrical system

		Midi 1.8 1984 to 1988
Battery	V / CC / RC	12 / 210 / 65
Alternator voltage / full load current / engine rpm		13.5 / _ / 3000
Starter motor current / voltage - cranking	A / V	_
- locked	A / V	_

Running gear

		Midi 1.8 1984 to 1988
Brakes -		
Front (min. friction material thickness)	mm	1.0
Rear (min. friction material thickness)	mm	1.0
Tyres		
Saloon	Size	_
Estate / Van	Size	185x14
Pressure - front / rear - Saloon	bar	_
- Estate / Van	bar	3.0 / 3.7[1]
Front suspension / wheel alignment		
Toe-in (+) / Toe-out (–)	mm [º]	-1.0 to +5.0
Camber		+35'±30'
Castor		+1°±30'
King pin inclination		+7°25'±30'
Rear suspension / wheel alignment		
Toe-in (+) / Toe-out (–)	mm [º]	_
Camber		_

Torque wrench settings

		Midi 1.8 1984 to 1988
Cylinder head - stage 1	Nm	78
- stage 2	Nm	88 to 108
Cylinder head - stage 3	Nm	_
- stage 4	Nm	_
Big-end bearings	Nm	57 to 61
Main bearings	Nm	83 to 113
Clutch cover	Nm	14 to 24
Flywheel [driveplate]	Nm	49 to 59
Front hubs	Nm	WSM
Rear hubs	Nm	_
Wheel nuts / bolts	Nm	_
Spark plugs	Nm	14 to 24

Capacities

		Midi 1.8 1984 to 1988
Engine oil & filter	litres	4.5
Gearbox - 4-speed [5-speed]	litres	1.6
Automatic transmission - refill	litres	_
Final drive	litres	0.9
Cooling system	litres	9.0
Fuel tank	litres	60

Notes and Illustrations

[1]**Bus: 3.0 / 3.1**

1: Idle speed 2: CO / Mixture

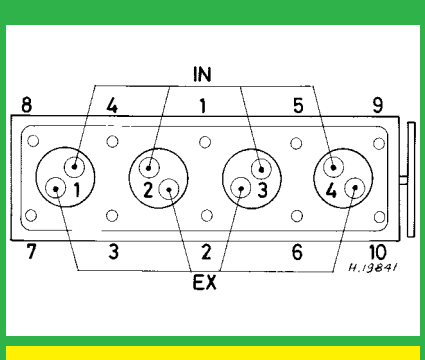

1817 cm³

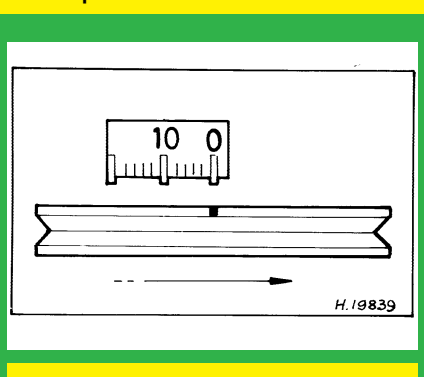

1817 cm³

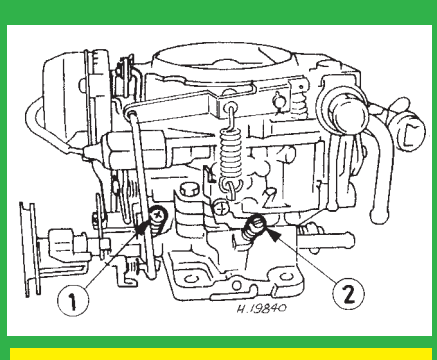

Nippon Kikaki / Stromberg