Haynes THE BOOK

Automotive Technical

DATA BOOK

Click on one of the buttons above to view data for this car. To return to this screen and make another choice, click anywhere on the data screen.

MENU | HELP

Engine and cooling system

		Scimitar SS1, 1600 1985 to 1990
Type		Ford CVH LP
Capacity (cm³) / number of cylinders		1596 / 4
Compression ratio / pressure	bar	9.5 / 11.0
Oil pressure	bar	[2.8]
Oil temperature	ºC	80
Valve clearance - inlet	mm	0: Hyd.
Valve clearance - exhaust	mm	0: Hyd.
Firing order		1-3-4-2
No 1 cylinder position		TBE
Thermostat opening temperature	ºC	88
Radiator cap pressure	bar	1.0

Fuel system

		Scimitar SS1, 1600 1985 to 1990
Idle speed - manual [auto]	rpm	800±100
Fast idle speed - manual [auto]	rpm	2600 to 2800
CO @ idle speed [3000 rpm] - see page VI	%	1.0 to 2.0
HC @ idle speed [3000 rpm] - see page VI	ppm	≤1200
CO2 @ idle speed [3000 rpm] - see page VI	%	_
O2 @ idle speed [3000 rpm] - see page VI	%	_
Carburettor / fuel injection		Weber
Type / ref		DFT
Main jet / needle		115, 125
Injection pressure	bar	_
Pump pressure	bar	0.24 to 0.38
Octane rating	RON	98[R]

Ignition system

		Scimitar SS1, 1600 1985 to 1990
Type		Electronic - Hall effect
Ignition coil		Bosch. Motorcraft
Primary resistance	ohms	0.72 to 0.88
Ballast resistor	ohms	_
Voltage - Tmnl 15(+) to earth	V	_
Distributor		Bosch/Lucas
Points gap (air gap)	mm	_
Dwell angle	º (%)	_
Condenser capacity	µF	_
Rotation		Anticlockwise
Ignition timing - basic [static	º Crankshaft @ rpm	12±2 BTDC @ idle
V = Vacuum NV = No Vacuum		NV
Total ignition advance	º Crankshaft @ rpm	_
	º Crankshaft @ rpm	_
	º Crankshaft @ rpm	_
Centrifugal check.	º Crankshaft @ rpm	0 @ 900
	º Crankshaft @ rpm	11 @ 3000
	º Crankshaft @ rpm	20 to 28 @ 6000
Vacuum range check	mbar	135 to 339
Maximum vacuum advance	º Crankshaft	18 to 26
Spark plugs		Motorcraft/Champion
Type		AGPR22C / RC7YC
Electrode gap	mm	0.75

Electrical system

		Scimitar SS1, 1600 1985 to 1990
Battery	V / CC / RC	12 / 175 / 60
Alternator voltage / full load current / engine rpm		13.7 to 14.6 / _ / 3000
Starter motor current / voltage - cranking	A / V	_
- locked	A / V	_

Running gear

		Scimitar SS1, 1600 1985 to 1990
Brakes -		
Front (min. friction material thickness)	mm	_
Rear (min. friction material thickness)	mm	_
Tyres		
Saloon	Size	175/70x13: 185/60x14
Estate / Van	Size	_
Pressure - front / rear - Saloon	bar	1.7 / 1.7
- Estate / Van	bar	_
Front suspension / wheel alignment		
Toe-in (+) / Toe-out (–)	mm [º]	0 to +1.6
Camber		0 to +1°
Castor		+4°
King pin inclination		+8°
Rear suspension / wheel alignment		
Toe-in (+) / Toe-out (–)	mm [º]	0
Camber		0

Torque wrench settings

		Scimitar SS1, 1600 1985 to 1990
Cylinder head - stage 1	Nm	25
- stage 2	Nm	55
Cylinder head - stage 3	Nm	+ 90°
- stage 4	Nm	+ 90°
Big-end bearings	Nm	30 to 36
Main bearings	Nm	90 to 100
Clutch cover	Nm	16 to 20
Flywheel [driveplate]	Nm	82 to 92
Front hubs	Nm	_
Rear hubs	Nm	_
Wheel nuts / bolts	Nm	61 to 81
Spark plugs	Nm	25 to 38

Capacities

		Scimitar SS1, 1600 1985 to 1990
Engine oil & filter	litres	3.5
Gearbox - 4-speed [5-speed]	litres	1.3 [1.9]
Automatic transmission - refill	litres	_
Final drive	litres	0.9
Cooling system	litres	9.7
Fuel tank	litres	45.4

Notes and Illustrations

1: Idle speed 2: CO / Mixture

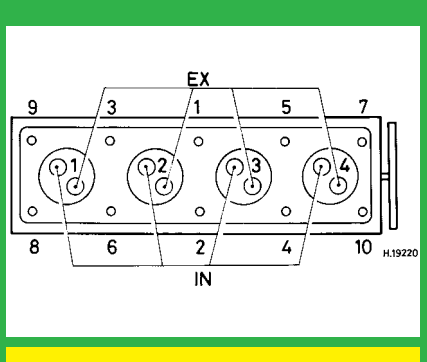

1596 cm³

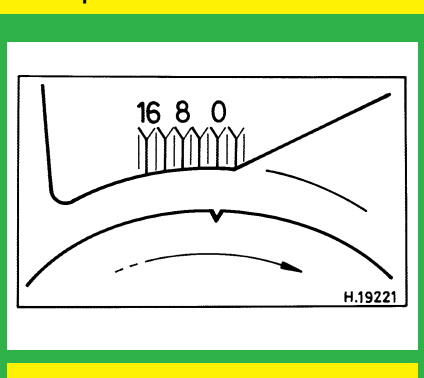

1596 cm³

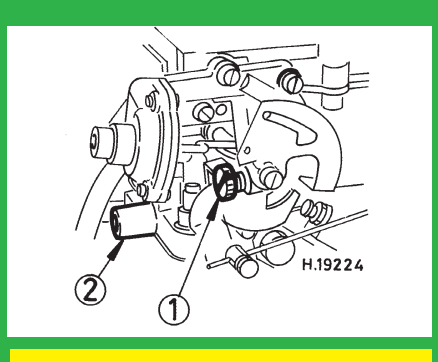

Weber DFT