Haynes THE BOOK

Automotive Technical DATA BOOK

Click on one of the buttons above to view data for this car. To return to this screen and make another choice, click anywhere on the data screen.

MENU | HELP

Engine and cooling system — Scimitar SS1 & SST, 1400 — 1987 to 1993

Type		Ford CVH
Capacity (cm³) / number of cylinders		1392 / 4
Compression ratio / pressure	bar	9.5 / 11.0
Oil pressure	bar	[2.8]
Oil temperature	ºC	80
Valve clearance - inlet	mm	0: Hyd.
Valve clearance - exhaust	mm	0: Hyd.
Firing order		1-3-4-2
No 1 cylinder position		TBE
Thermostat opening temperature	ºC	88
Radiator cap pressure	bar	1.0

Fuel system — Scimitar SS1 & SST, 1400 — 1987 to 1993

Idle speed - manual [auto]	rpm	800±100
Fast idle speed - manual [auto]	rpm	2700±100
CO @ idle speed [3000 rpm] - see page VI	%	1.0 to 2.0
HC @ idle speed [3000 rpm] - see page VI	ppm	≤1200
CO2 @ idle speed [3000 rpm] - see page VI	%	_
O2 @ idle speed [3000 rpm] - see page VI	%	_
Carburettor / fuel injection		Weber
Type / ref		2V DFTM
Main jet / needle		102, 125
Injection pressure	bar	_
Pump pressure	bar	0.24 to 0.38
Octane rating	RON	98[R][1]

Ignition system — Scimitar SS1 & SST, 1400 — 1987 to 1993

Type		Electronic - Hall effect
Ignition coil		Bosch. Femsa. Polmot
Primary resistance	ohms	0.72 to 0.88
Ballast resistor	ohms	_
Voltage - Tmnl 15(+) to earth	V	_
Distributor		Bosch/Lucas
Points gap (air gap)	mm	_
Dwell angle	º (%)	_
Condenser capacity	µF	_
Rotation		Anticlockwise
Ignition timing - basic [static	º Crankshaft @ rpm	12±2 BTDC @ idle
V = Vacuum NV = No Vacuum		NV
Total ignition advance	º Crankshaft @ rpm	_
	º Crankshaft @ rpm	_
	º Crankshaft @ rpm	_
Centrifugal check.	º Crankshaft @ rpm	0 @ 900
	º Crankshaft @ rpm	_
	º Crankshaft @ rpm	17 to 23 @ 6000
Vacuum range check	mbar	112 to 447
Maximum vacuum advance	º Crankshaft	15 to 23
Spark plugs		Motorcraft/Champion
Type		AGPR22C / RC7YC
Electrode gap	mm	0.75

Electrical system — Scimitar SS1 & SST, 1400 — 1987 to 1993

Battery	V / CC / RC	12 / 175 / 60
Alternator voltage / full load current / engine rpm		13.7 to 14.6 / _ / 3000
Starter motor current / voltage - cranking	A / V	_
- locked	A / V	_

Running gear — Scimitar SS1 & SST, 1400 — 1987 to 1993

Brakes -		
Front (min. friction material thickness)	mm	_
Rear (min. friction material thickness)	mm	_
Tyres		
Saloon	Size	175/70x13: 185/60x14
Estate / Van	Size	_
Pressure - front / rear - Saloon	bar	1.7 / 1.7
- Estate / Van	bar	_
Front suspension / wheel alignment		
Toe-in (+) / Toe-out (–)	mm [º]	0 to +1.6
Camber		0 to +1°
Castor		+4°
King pin inclination		+8°
Rear suspension / wheel alignment		
Toe-in (+) / Toe-out (–)	mm [º]	0
Camber		0

Torque wrench settings — Scimitar SS1 & SST, 1400 — 1987 to 1993

Cylinder head - stage 1	Nm	25
- stage 2	Nm	55
Cylinder head - stage 3	Nm	+ 90°
- stage 4	Nm	+ 90°
Big-end bearings	Nm	30 to 36
Main bearings	Nm	90 to 100
Clutch cover	Nm	16 to 20
Flywheel [driveplate]	Nm	82 to 92
Front hubs	Nm	_
Rear hubs	Nm	_
Wheel nuts / bolts	Nm	61 to 81
Spark plugs	Nm	25 to 38

Capacities — Scimitar SS1 & SST, 1400 — 1987 to 1993

Engine oil & filter	litres	3.5
Gearbox - 4-speed [5-speed]	litres	1.3 [1.9]
Automatic transmission - refill	litres	_
Final drive	litres	0.9
Cooling system	litres	9.7
Fuel tank	litres	45.4

Notes and Illustrations

[1]SST: [E 95 RON]

1: Idle speed 2: CO / Mixture

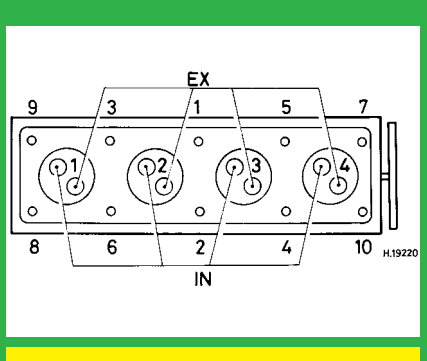

1392 cm³

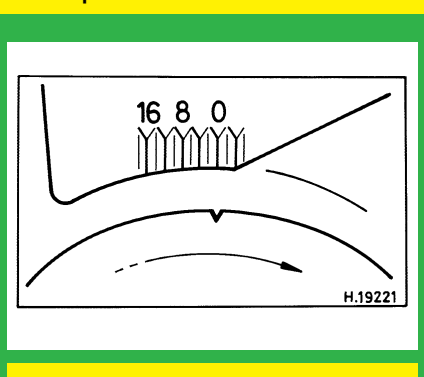

1392 cm³

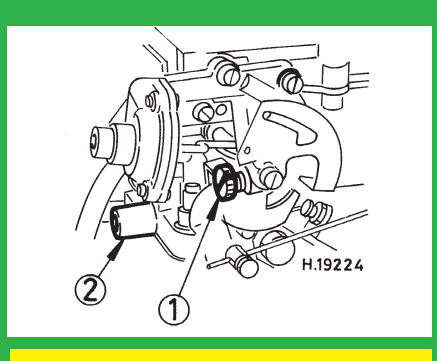

Weber DFTM