Haynes THE BOOK

Automotive Technical DATA BOOK

Click on one of the buttons above to view data for this car. To return to this screen and make another choice, click anywhere on the data screen.

MENU | HELP

Engine and cooling system

		309, 16V 1990 to 1993
Type		XU9J4 (D6C) (116kW)
Capacity (cm³) / number of cylinders		1905 / 4
Compression ratio / pressure	bar	10.4 / _
Oil pressure	bar	2.0 [4.9]
Oil temperature	ºC	80
Valve clearance - inlet	mm	0: Hyd.
Valve clearance - exhaust	mm	0: Hyd.
Firing order		1-3-4-2
No 1 cylinder position		FE
Thermostat opening temperature	ºC	88
Radiator cap pressure	bar	1.0

Fuel system

		309, 16V 1990 to 1993
Idle speed - manual [auto]	rpm	850±50 N/A
Fast idle speed - manual [auto]	rpm	_
CO @ idle speed [3000 rpm] - see page VI	%	1.1±0.5 N/A
HC @ idle speed [3000 rpm] - see page VI	ppm	≤1200
CO2 @ idle speed [3000 rpm] - see page VI	%	_
O2 @ idle speed [3000 rpm] - see page VI	%	_
Carburettor / fuel injection		Bosch
Type / ref		ML4.1-Motronic. 91 ▸: M1.3
Main jet / needle		_
Injection pressure	bar	3.0
Pump pressure	bar	2.8 to 3.2
Octane rating	RON	98[E 98 RON]

Ignition system

		309, 16V 1990 to 1993
Type		DME Motronic
Ignition coil		Bosch
Primary resistance	ohms	0.7
Ballast resistor	ohms	_
Voltage - Tmnl 15(+) to earth	V	_
Distributor		Bosch
Points gap (air gap)	mm	_
Dwell angle	º (%)	_
Condenser capacity	µF	_
Rotation		_
Ignition timing - basic [static	º Crankshaft @ rpm	Computer control
V = Vacuum NV = No Vacuum		_
Total ignition advance	º Crankshaft @ rpm	_
	º Crankshaft @ rpm	_
	º Crankshaft @ rpm	_
Centrifugal check.	º Crankshaft @ rpm	Computer control
	º Crankshaft @ rpm	_
	º Crankshaft @ rpm	_
Vacuum range check	mbar	Computer control
Maximum vacuum advance	º Crankshaft	_
Spark plugs		Eyquem/Champion
Type		FC62LS3 / C7YCX
Electrode gap	mm	1.20

Electrical system

		309, 16V 1990 to 1993
Battery	V / CC / RC	12 / 210 / 65
Alternator voltage / full load current / engine rpm		13.8 to 14.8 / _ / 3000
Starter motor current / voltage - cranking	A / V	_
- locked	A / V	_

Running gear

		309, 16V 1990 to 1993
Brakes -		
Front (min. friction material thickness)	mm	1.0
Rear (min. friction material thickness)	mm	_
Tyres		
Saloon	Size	195/55x15
Estate / Van	Size	_
Pressure - front / rear - Saloon	bar	2.0 / 2.0²
- Estate / Van	bar	_
Front suspension / wheel alignment		
Toe-in (+) / Toe-out (–)	mm [º]	+1.0±0.5 PW
Camber		-40'±30'
Castor		+2°10'±30'
King pin inclination		+10°40'±30'
Rear suspension / wheel alignment		
Toe-in (+) / Toe-out (–)	mm [º]	+2.5±1.3 PW
Camber		-1°15'±30'

Torque wrench settings

		309, 16V 1990 to 1993
Cylinder head - stage 1	Nm	60
- stage 2	Nm	Slacken
Cylinder head - stage 3	Nm	20
- stage 4	Nm	+ 300°
Big-end bearings	Nm	40¹
Main bearings	Nm	53
Clutch cover	Nm	22
Flywheel [driveplate]	Nm	50 LkC
Front hubs	Nm	265
Rear hubs	Nm	215
Wheel nuts / bolts	Nm	85
Spark plugs	Nm	25

Capacities

		309, 16V 1990 to 1993
Engine oil & filter	litres	5.3
Gearbox - 4-speed [5-speed]	litres	2.0
Automatic transmission - refill	litres	_
Final drive	litres	WT
Cooling system	litres	7.2
Fuel tank	litres	70

Notes and Illustrations

[1]**Slacken, then 20 + 70°**
[2]**Michelin: 2.1 / 2.1**

1: Idle speed 2: CO / Mixture

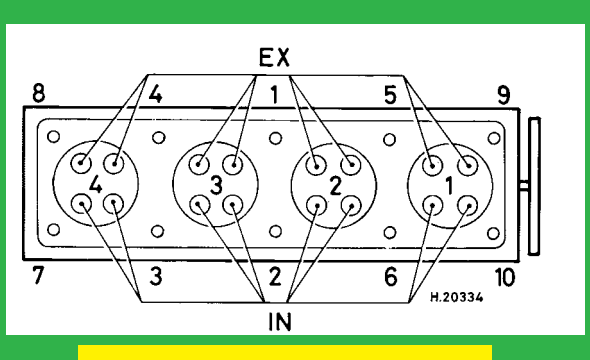

1905 cm³, 16V

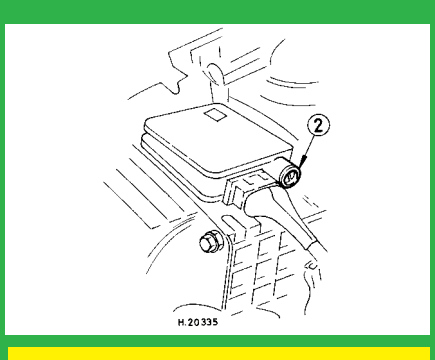

ML4.1 / M1.3-Motronic